V. A. Kirillin, V. V. Sychev,
A. E. Sheindlin

Engineering Thermodynamics

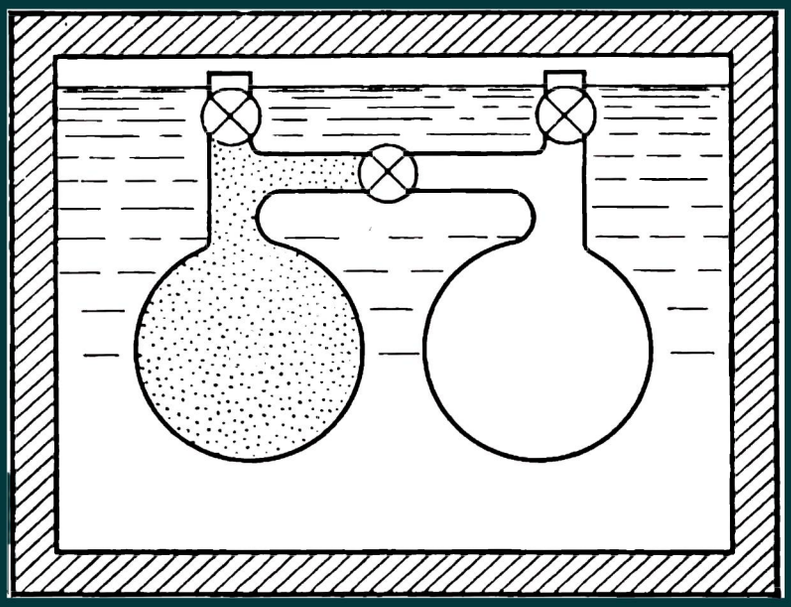

Mir Publishers · Moscow

V. A. Kirillin, V. V. Sychev,
A. E. Sheindlin

Engineering Thermodynamics

ИЗДАТЕЛЬСТВО МИР

В. А. Кириллин, В. В. Сычев, А. Е. Шейндлин

Техническая термодинамика

Издательство «Энергия»

V. A. Kirillin, V. V. Sychev,
A. E. Sheindlin

Engineering Thermodynamics

Translated from the Russian
by S. Semyonov

Mir Publishers · Moscow

The second Russian edition,
from which this translation
has been done, was awarded
the State Prize for the year 1976

First published 1976

Revised from the 1974 Russian edition

На английском языке

© Издательство «Энергия», 1974

© English translation, Mir Publishers, 1976

Preface

Although many Soviet and foreign textbooks in engineering thermodynamics already exist, the authors have decided to write a new textbook for university students in power engineering, heat physics and applied physics departments. We have done so for the following reasons.

With improved instruction in thermodynamics in most higher educational institutions, the authors feel a more thorough presentation of basic problems is necessary. Of primary importance is an understanding of the fundamental concepts and methods of thermodynamics for analyzing various physical phenomena.

Clearly, a modern course in engineering thermodynamics must reflect today's and even tomorrow's level of technology. Therefore, it is difficult to conceive of a modern textbook in thermodynamics which does not present the different methods of converting heat directly into electric power, modern methods of analyzing the efficiency of the cycles of heating plants, the thermodynamics of dissociated and ionized gases, and other problems.

Since the authors consider it unjustified to include in courses of engineering thermodynamics problems relating to statistical physics and the molecular-kinetic theories of gases, we will limit ourselves to a short discussion of the statistical aspects of the second law of thermodynamics.

Although, as a rule, institutes of power engineering do not offer a special course in chemical thermodynamics, modern heat engineering involves many processes accompanied by chemical reactions, dissociation and ionization. The authors consider it necessary, therefore, to devote a special chapter to a short presentation of chemical thermodynamics to give the reader an idea of the methods applied in a thermodynamic description of chemical processes.

All numerical examples are given in the SI system (the unit to measure energy is the *joule*, the unit to measure pressure is the *pascal*). As a general rule, along with their values in the SI system the values of energy have also been indicated in calories (and pressure, in kgf/cm^2).

The authors will be grateful for criticism and will take it into consideration in future work on the book.

V. A. Kirillin
V. V. Sychev
A. E. Sheindlin

Preface to the English edition

Engineering thermodynamics is one of the core disciplines for training power engineers, heat engineers, heat physicists, and other specialists connected with heat processes and equipment. Soviet higher technical institutions have always given a rather thorough treatment of thermodynamics. The present book is the basic Soviet textbook in engineering thermodynamics for the above-mentioned specialists. It gives us great pleasure to offer it to readers in English-speaking countries.

The Authors

Contents

	Preface	5
	Preface to the English edition	6
1	**Introduction**	**11**
1.1	Thermodynamics and its method	11
1.2	Properties of state	12
1.3	Concept of a thermodynamic process	16
1.4	Ideal gas. Ideal gas laws	18
1.5	Concept of mixtures. Mixtures of ideal gases	25
1.6	Concept of heat capacity	30
2	**The first law of thermodynamics**	**33**
2.1	Heat. Joule's experiment. Equivalence of heat and work	33
2.2	Law of conservation and conversion of energy	36
2.3	Internal energy and external work	36
2.4	Mathematical statement of the first law of thermodynamics	40
2.5	Enthalpy	46
2.6	Mathematical statement of the first law of thermodynamics for processes of flow	50
3	**The second law of thermodynamics**	**55**
3.1	Cycles. Concept of thermal efficiency. Heat sources	55
3.2	Reversible and irreversible processes	59
3.3	Statements of the second law of thermodynamics	63
3.4	The Carnot cycle. Carnot's theorem	64
3.5	The thermodynamic temperature scale	74
3.6	Entropy	87
3.7	Change of entropy in irreversible processes	94
3.8	Combined mathematical statement of the first and second laws of thermodynamics	99
3.9	Entropy and thermodynamic probability	100
3.10	Reversibility and work	109

4	**Differential equations of thermodynamics**	**119**
4.1	Basic methods	119
4.2	Maxwell's relations	122
4.3	Partial derivatives of internal energy and enthalpy	123
4.4	Heat capacities	126
5	**Equilibrium in thermodynamic systems and phase changes**	**129**
5.1	Homogeneous and heterogeneous thermodynamic systems	129
5.2	Thermodynamic equilibrium	130
5.3	Conditions of stability and equilibrium for an isolated homogeneous system	138
5.4	Conditions for phase equilibrium	142
5.5	Phase changes	144
5.6	The Clausius-Clapeyron equation	148
5.7	Phase stability	155
5.8	Phase changes at unequal phase pressures	157
5.9	Phase changes under curved surfaces	160
6	**Thermodynamic properties of substances**	**164**
6.1	Thermal and caloric properties of solids	164
6.2	Thermal and caloric properties of liquids	176
6.3	Andrews' experiment. The critical point. Van der Waals' equation	184
6.4	Thermal and caloric properties of real gases. Equation of state for real gases	194
6.5	Thermodynamic properties of substances on the change-of-phase line. Two-phase systems	204
6.6	Properties of substance at the critical point	211
6.7	Methods of calculating the entropy of substance	214
6.8	Thermodynamic diagrams of state for substances	220
6.9	Thermodynamic properties of substance in a metastable state	224
7	**Basic thermodynamic processes**	**229**
7.1	The isochoric process	229
7.2	The isobaric process	233
7.3	The isothermal process	235
7.4	The adiabatic process	238
7.5	Polytropic processes	246
7.6	Throttling. The Joule-Thomson effect	253
7.7	Joule expansion (expansion into a vacuum)	264
7.8	Mixing	267
7.9	Compression processes	274

8	**Fluid flow processes**	288
8.1	Basic flow equations	288
8.2	Velocity of sound	292
8.3	Flow through convergent nozzles	297
8.4	Transonic range. The Laval nozzle	305
8.5	Adiabatic flow with friction	308
8.6	General regularities of flow. The influence inversion law	312
8.7	Adiabatic stagnation temperature	318
9	**Methods to analyze the efficiency of thermopower plants**	319
9.1	Cycle efficiency	319
9.2	Comparison methods for thermal efficiencies of reversible cycles	321
9.3	Method of efficiencies in the analysis of irreversible cycles	323
9.4	Entropy calculation method for the loss of availability in irreversible cycles	326
9.5	Exergy calculation method for availability losses	332
10	**Gas power cycles**	340
10.1	Cycles of reciprocating internal combustion engines	340
10.2	Gas-turbine cycles	353
10.3	Reaction-engine cycles	371
11	**Vapour power cycles**	382
11.1	The Carnot cycle	382
11.2	The Rankine cycle	385
11.3	Rankine cycle analysis allowing for irreversible losses	395
11.4	Reheat cycle	418
11.5	Regenerative cycle	421
11.6	Binary cycles	427
11.7	Thermification cycles	431
12	**Cycles of direct-energy conversion systems**	435
12.1	Thermoelectric generator cycle	435
12.2	The cycle of a thermionic converter	444
12.3	MHD-generator cycle	451
13	**Refrigeration cycles**	459
13.1	Reverse heat cycles and processes. Refrigeration installations	459

13.2 Air-compression refrigeration cycle 463
13.3 Vapour-compression refrigeration cycle 468
13.4 Steam-jet refrigeration cycle 476
13.5 Absorption refrigeration cycle 479
13.6 Thermoelectric refrigeration cycle 482
13.7 Heat pump. Principle of operation 486
13.8 Liquefaction of gases 488

14 Humid air 493

14.1 Basic concepts 493
14.2 *I-d* diagram for humid air 502

15 Fundamentals of chemical thermodynamics 508

15.1 Thermochemistry. Hess's law. Kirchhoff's equation 509
15.2 Chemical equilibrium and the second law of thermodynamics 515
15.3 Equilibrium constant and degree of dissociation 520
15.4 The Nernst heat theorem 534

Conclusion 538
Bibliography 538
Name index 540
Subject index 542

1

Introduction

1.1 Thermodynamics and its method

Thermodynamics is the science of the regularities governing processes of energy conversion.

The fundamentals of thermodynamics were laid in the nineteenth century when the development of heat engines necessitated the study of the regularities governing the conversion of heat into work. But later on the method of thermodynamics stepped over the limits of heat engineering and found wide application in many branches of physics, chemistry and of other sciences.

Thermodynamics makes it possible to determine the direction in which various physical and chemical processes may proceed in different systems. As it will be seen, thermodynamics reveals the profound relations between different properties of substance. In principle, this permits, with the data on the heat capacities of a substance available, to use thermodynamic methods in calculating, for instance, the density of this substance, and vice versa.

As distinguished from other branches of physics and chemistry, thermodynamics does not operate with any models of the structure of substance, and is in general not related directly to the notions of the microstructure of substance, which is the strength but also the weakness of thermodynamics.

Thermodynamics itself is incapable of giving any data on the properties of substance. But if some of the data are known, thermodynamic methods permit very interesting and important conclusions to be drawn.

The construction principle of thermodynamics is simple. Thermodynamics is based on two main laws, established by experiment. The first law of thermodynamics characterizes the quantitative side of energy conversion

processes, and the second law sets up the qualitative side (direction) of processes in physical systems.* Making use of these two fundamental laws and applying the method of strict deduction we can obtain all main conclusions of thermodynamics.

Thermodynamics is applicable to all systems for which its fundamental laws are true. The first law of thermodynamics, as it will be seen, is the quantitative expression of the law of conservation and conversion of energy, and it is of a general nature. As to the second law, it is based on the experience accumulated in observing and studying macrosystems within the scope accessible to direct observation.

Given in this chapter below are the necessary primary data, concepts and definitions preceding the treatment of thermodynamics proper.

1.2 Properties of state

Substance is usually encountered in one of the three main states: gaseous, liquid, or solid.** It is clear that under various conditions one and the same body or substance can exist in different states. In given permanent conditions, the considered substance will always be in one and the same state. For instance, at atmospheric pressure and a temperature of 400 °C water will exist only in the vapour state but never as a liquid or a solid.

In order to determine the concrete physical conditions under which a substance is considered and, thereby, determine unambiguously the state of this substance, convenient characteristics of the state of substance are introduced, the so-called *parameters*, or *properties*, *of state*.

We distinguish intensive and extensive properties of a substance. *Intensive* properties (pressure, temperature and some other) do not depend on the mass of substance in a system. The properties which depend on the mass of substance in a system are referred to as *extensive*. An example of extensive properties is volume, which changes under given conditions in proportion to the mass of substance: the volume of 10 kg of substance is 10 times greater than the volume of 1 kg of the same substance.

The specific extensive properties, i.e. properties reduced to unit mass of substance, acquire the meaning of intensive properties. So, for instance, specific volume, specific heat capacity, etc., can be considered as intensive properties. The intensive properties, determining the state of a body or of a group of bodies—the thermodynamic system—are referred to as the *thermodynamic properties of the state of a body* (system).

The most convenient and, therefore, the most widely used properties of state are the absolute temperature, the absolute pressure and the specific volume (or density) of a body.

One of the most important properties of state is *absolute temperature*. Temperature characterizes the thermal state of a body. It is common knowledge that heat can flow spontaneously only from bodies at a higher temperature to bodies at a lower temperature. Thus, the temperature of bodies determines

---

* Neither the first nor the second law of thermodynamics rests upon any assumptions on the structure of substance, and it is precisely this fact that ensures, as it was already mentioned above, the great generality of the methods of thermodynamics.

** Ionized gas, known as plasma, is sometimes believed to represent the fourth state of substance.

the direction of the possible spontaneous heat exchange between these bodies.*

Temperature is measured, for instance, with the aid of thermometers. Since the physical properties of substances depend to a greater or lesser extent on temperature, we can use as a thermometer an instrument based on accurate and easily reproducible measurements of such properties.

Each instrument used for measuring temperature must be calibrated in accordance with a commonly accepted temperature scale. The relationships between the presently used Celsius, Fahrenheit, Reaumur and Rankine temperature scales are given in Table 1.1; the most commonly used is the Centi-

Table 1.1 Relations between Celsius, Rankine, Fahrenheit and Reaumur temperature scales

Scale	Celsius, °C	Rankine, °Ra	Fahrenheit, °F	Reaumur, °R
Celsius, °C		$5/9t$ °Ra-273.15	$\frac{t\ °F-32}{1.8}$	$1.25t$ °R
Rankine, °Ra	$1.8t$ °C$+273.15$		t °F$+459.67$	$1.8(1.25t$ °R$+$ $+273.15)$
Fahrenheit, °F	$1.8t$ °C$+32$	t °Ra-459.67		$9/4t$ °R
Reaumur, °R	$0.8t$ °C	$0.8\,(5/9t$ °Ra$-$ $-273.15)$	$4/9(t$ °F$-32)$	

grade (Celsius) temperature scale in which the temperature interval between two fixed points, the ice melting point (0 °C) and the boiling point of water at atmospheric pressure (100 °C) is divided into one hundred equal intervals (degrees).

Of essential importance in thermodynamics is the so-called *thermodynamic*, or *absolute*, *temperature scale*, which shall be considered below, in Chapter 3.

The other important property of state, *absolute pressure*,** is defined as the force per unit area exerted by the substance on its surroundings. Pressure is measured in different units: the pascal (Pa)***, the bar, the so-called technical atmosphere or simply atmosphere (1 kgf/cm^2), in mm of Hg or H_2O. The relations between different units of pressure are given in Table 1.2.

* As will be shown below, it is possible to realize the transfer of heat from a body at a lower temperature to a body at a higher temperature, but for such a process to be accomplished, an additional process should be realized, involving often an expenditure of a certain amount of work. Hence, this process of heat flow from a body at a lower temperature to a body at a higher temperature will not be spontaneous.

** Excess, or gauge, pressure, i.e. the difference between the absolute and barometric pressures, does not determine the state of substance and it is, therefore, not a property of state since it depends, in addition, on the state of the surrounding medium (its pressure).

*** It will be recalled that the pascal is the pressure exerted by a force of 1 N uniformly distributed over an area of 1 m^2. Since 1 N = 1 kg-m/s^2, it follows that 1 Pa = 1 kg/(m-s^2). Along with the pascal greater units are used, the kilopascal (kPa) and the megapascal (MPa): 1 Pa = 10^{-3} kPa = 10^{-6} MPa.

Table 1.2 Relations between different units of pressure

Unit	Pa	bar	kgf/cm²	mm Hg	mm H_2O
1 Pa		10^{-5}	1.02×10^{-5}	7.5024×10^{-3}	0.102
1 bar	10^5		1.02	7.5024×10^2	1.02×10^4
1 kgf/cm²	9.8067×10^4	0.980 67		735	10^4
1 mm Hg	133	1.33×10^{-3}	1.36×10^3		13.6
1 mm H_2O	9.8067	9.8067×10^{-5}	10^{-4}	7.35×10^{-2}	

The *specific volume* of substance is the volume occupied by unit mass of a substance. The specific volume v is related to the mass of a body G and its volume V as follows:

$$v=\frac{V}{G}. \tag{1.1}$$

The specific volume of substance is usually measured in m³/kg or cm³/g.

Density

$$\rho=\frac{G}{V}=\frac{1}{v} \tag{1.2}$$

is usually measured in kg/m³ or g/cm³.

The concept of the specific weight (gravity) of substance will sometimes be encountered in the text. By specific weight we mean the weight of substance per unit volume. In accordance with Newton's Second Law, the density and specific weight of a substance are related by the following equation:

$$\gamma=\rho g=\frac{g}{v}, \tag{1.3}$$

where g is the acceleration of gravity.

In the absence of external forces, the state of pure substance is determined unambiguously if two intensive independent properties of state are given. Any other property is a single-valued function of these properties of state. If we consider, for instance, water vapour at a temperature of 250 °C and a pressure equal to 98 kPa (10 kgf/cm²), there can be only one value for the specific volume of such vapour, v = 0.2375 m³/kg. Thus, the specific volume of a given substance is determined unambiguously by the pressure p and temperature T, i.e.

$$v = f\,(p,\ T). \tag{1.4}$$

Since in determining the state of a substance all state properties "are equal in rights", the temperature of the substance will be unambiguously determined from the relation

$$T = \varphi\,(p,\ v), \tag{1.5}$$

and the pressure from the relation

$$p = \psi\,(T,\ v). \tag{1.6}$$

Thus, any three properties of state (for instance, p, v or T) of a pure substance are interrelated unambiguously. The equation relating the three properties is referred to as the *equation of state* of a given substance. The rela-

tions (1.4) to (1.6) can be presented as the equation of state in the following form:

$$F(p, v, T) = 0. \tag{1.7}$$

For each substance the functional relation between p, v, and T (or the values of constants present in this relation) is individual in nature; hence,

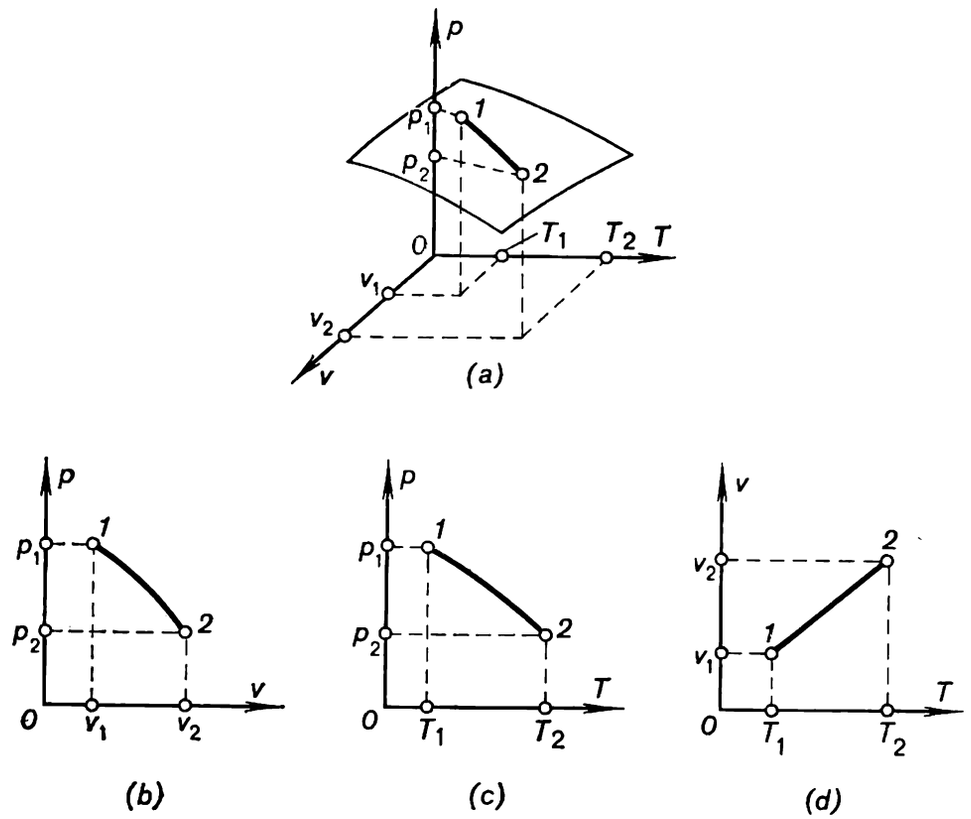

Fig. 1.1

the thermodynamic properties are described by an equation of state which is proper for each substance.

The relation between the properties of state can be represented by a system of coordinates p, v, T in the form of a so-called *thermodynamic surface*, illustrated in Fig. 1.1*a*.

However, the representation of the states of a system (substance) and of the processes developing in the system in space (or three-dimensional) coordinates involves a number of difficulties. That is why rectangular coordinates are usually used, with any two (of the three) properties of state taken for abscissa and ordinate. The magnitude of the third property is then determined for each pair of given properties from the equation of state or by experiment.

Coordinate systems of this kind are usually referred to as the *diagrams of state*, or *diagrams of properties*. The diagrams finding the widest application in engineering thermodynamics are those with coordinates p and v (the p-v diagram Fig. 1.1*b*), p and T (the p-T diagram, Fig. 1.1*c*), and v and T (the v-T diagram, Fig. 1.1*d*). Below we shall get familiar with a number of other diagrams of properties, or state diagrams.

1.3 Concept of a thermodynamic process

A *thermodynamic system* is defined as a totality of material bodies interacting both with one another and with the external medium. All other material bodies arranged outside the boundaries of the system considered are said to constitute the surroundings.

If only one of the properties of state changes, the state of the system changes as well, i.e. a *thermodynamic process* representing the totality of the changing states of the system takes place.

All processes occurring in a thermodynamic system can be divided into equilibrium and non-equilibrium processes. An *equilibrium* (quasi-static) *process* is defined as a thermodynamic process in which the system undergoes a continuous succession of equilibrium states (the equilibrium state of a system is considered in detail in Chapter 5; it is characterized, in particular, by the fact that all parts of the system are at the same temperature and pressure). A *non-equilibrium process* is defined as a thermodynamic process in which the system is not in a state of equilibrium (i.e. in the process various parts of the system are at different temperatures, pressures, and have different densities, concentrations, etc.).

The process occurring in a system will be the closer to an equilibrium one the shorter the time (compared with the characteristic time of the process) it takes the system to return to a state of equilibrium after a disturbance related to the development of the process.

Let us expound these concepts by considering the following example. Consider a vessel separated into two parts by a partition; one of the parts is filled with a gas under pressure, and in the other part a vacuum is maintained. If the partition is removed, the compressed gas will expand in the vessel, occupying the entire volume of the vessel and a uniform pressure will set in in the vessel. This process is a typical non-equilibrium process; throughout the entire process the gas will be at different pressures in different parts of the vessel: first the layers of the gas adjacent to the partition will undergo expansion, then the following layers, etc.

If a gas is compressed in a cylinder with the aid of a piston acted upon by external pressure, the pressure acting upon the piston must exceed somewhat the pressure of the gas filling the cylinder. This is due to the fact that with the piston moving at a finite velocity, first the layers of gas closer to the piston will be compressed; hence, these layers shall be under a pressure exceeding the mean pressure of the gas in the cylinder. This change in pressure (sometimes referred to as the disturbance) caused by the moving piston is not propagated instantaneously but at a finite velocity*. Before this disturbance propagates over the entire volume of the cylinder, the piston has time to move through a certain distance and the pressure of the gas near the piston rises again, etc. It is this higher pressure, the pressure of the gas which is in direct contact with the piston, that will oppose piston travel. Thus, while the gas is being compressed from an initial to a final pressure, the pressure of the gas inside the cylinder will differ in the various parts of the volume filled by the gas, and hence non-equilibrium compression of the gas will

* This velocity will be shown in Chapter 8 to be equal to the velocity of sound propagation in the medium.

take place: there is no equilibrium both inside the space occupied by the gas being compressed and in the entire system (compressed gas + piston + surroundings acting upon the piston). It should also be noted that the additional difference between the external pressure acting upon the piston and the pressure of the gas in the cylinder is due to the fact that since, as the piston travels, the layers of the gas undergoing compression in the cylinder also move at definite velocities, an additional force is required, imparting these velocities to the moving layers of gas (the kinetic energy of these layers is expended to overcome the forces of viscous friction in the gas proper and skin friction occurring between the gas and cylinder walls).

It follows from the foregoing that, as a rule, the higher the rate of the process, the greater the irregularity occurring in the system while the process is being accomplished. In particular, in the process of gas compression in a cylinder considered above, the difference in pressure at various points in the cylinder and respectively the difference in the pressures on both sides of the piston will be the greater, the higher the piston velocity. If the piston velocity is quite low, the pressure of the gas at various points in the cylinder will differ but slightly, with the required external excess pressure acting upon the piston being also of a rather small magnitude. In other words, the lower the rate at which the process proceeds, the closer the process to an equilibrium one.

Any real process is a non-equilibrium one to a greater or lesser degree. In principle, however, this departure from equilibrium can be made as slight as desirable by reducing the rate of the process. Thus, an equilibrium process is the extreme, or limiting, case of a non-equilibrium process with the rate of this process tending to zero. That is why equilibrium processes are sometimes referred to as quasi-static processes.

From here on by the word "process" we shall mean an equilibrium process. When considering non-equilibrium processes, we shall state this explicitly.

If a system consists of a pure substance, its state, as it was mentioned above, is represented by some surface in the system of p, v, T coordinates. The process of transition of this system from state *1* (where the properties of the substance are p_1, v_1, T_1) into state *2* (with properties p_2, v_2, T_2) will be graphically represented by line *1-2* on the surface of state of the given substance (Fig. 1.1*a*). Line *1-2* representing the change in properties in the process, is called the *path of the process*. Each point on the path of the process characterizes an equilibrium state of the system. It is possible to represent graphically only processes in which the system passes through a continuous succession of equilibrium states, i.e. only equilibrium processes can be represented graphically.

It is clear that the paths of a process can also be represented or plotted on plane diagrams of properties. The path of the process *1-2* is projected from the surface of state, shown in Fig. 1.1*a* on the p-v, p-T and v-T diagrams in Fig. 1.1*b*, *c*, *d*.

An equilibrium process in the course of which the system's temperature remains constant is known as an *isothermal* (constant-temperature) *process*. An example of an isothermal process is the boiling of pure water in an open vessel: until all the water boils out of the vessel, its temperature remains practically constant (provided atmospheric pressure does not change in the process of boiling).

An equilibrium process proceeding at a constant pressure is said to be an *isobaric* (constant-pressure) *process*. An isobaric process can be exemplified by the process of heating water in an open vessel; the pressure of the heated water then remains constant and equal to atmospheric pressure, whereas water temperature rises and the specific weight (gravity) of the water changes.

An equilibrium process proceeding at constant volume is called an *isochoric* (constant-volume) *process*. An example of an isochoric process is the heating of water in a closed vessel. In the course of heating the volume of the vessel remains practically constant (should we neglect some expansion of the vessel upon heating), whereas the temperature of the water in the vessel increases and water pressure rises.

An equilibrium process in the course of which heat is not added into a thermodynamic system from the surroundings (and is not rejected to the surroundings) is called *adiabatic*; in a process of this kind there is no heat exchange between the system and the surroundings. The lower the conductivity of the insulation of the system, the closer the process is to an adiabatic one.

The curve (path) of an isothermal process is called the isotherm, the curve of an isobaric process the isobar, the curve of an isochoric process the isochor, and the curve of the adiabatic process is called the adiabatic curve. Below in the book we shall get familiar with a number of other equilibrium thermodynamic processes.

1.4 Ideal gas. Ideal gas laws

In the seventeenth to nineteenth centuries, investigators studying the behaviour of gases under pressures close to atmospheric elaborated a number of important empirical regularities.

In 1662 R. Boyle, and in 1676 E. Mariotte, independently from Boyle, found that at a constant temperature the product of the pressure of a gas by its volume is constant, i.e. that in the isothermal process of expansion or compression of a gas,

$$pV = \text{const} \tag{1.8}$$

The equation (1.8) is known as *Boyle's law*.

In 1802 J. L. Gay-Lussac found that if the pressure of a gas is maintained constant in the course of heating (i.e. if an isobaric process is accomplished), the volume of the heated gas will increase with temperature, the dependence being linear and of the form

$$V = V_0 (1 + \alpha t). \tag{1.9}$$

This equation is referred to as *Gay-Lussac's law*. Here V_0 is the volume of the gas at 0 °C, V the volume of the gas at a temperature of t °C, and α the coefficient of volume expansion of the gas. It was shown that at sufficiently low pressures the magnitude of the coefficient of volume expansion happens to be the same for all gases and equal to about $\alpha = 1/273 = 0.003\,66$ 1/°C; precision measurements have shown the volumetric coefficient of expansion α to be equal to 0.003 661 1/°C.

If V_1 and V_2 are volumes of a gas, respectively, at temperatures t_1 and t_2 with the same pressure p = const, it follows from equation (1.9) that

$$\frac{V_2}{V_1}=\frac{t_2+1/\alpha}{t_1+1/\alpha}. \tag{1.10}$$

Let us consider now the process of heating a gas in a vessel of constant volume (isochoric process). This process is also described by Gay-Lussac's law in the following form:

$$p = p_0 (1 + \alpha t), \tag{1.11}$$

where p_0 and p are respectively gas pressures at temperatures 0 and t °C.

If p_1 and p_2 are the pressures of the gas at temperatures t_1, t_2 with the volume of the vessel V = const, Eq. (1.11) states that

$$\frac{p_2}{p_1}=\frac{t_2+1/\alpha}{t_1+1/\alpha} \tag{1.12}$$

Let us introduce the following notation:

$$T = t + 1/\alpha \tag{1.13}$$

Since, as it was stated above, $\alpha = 0.003\,661$ 1/°C,

$$T = 273.15 + t \text{ °C}. \tag{1.14}$$

The dimension of T is temperature and it should be regarded as the temperature read on a scale differing from the Celsius (Centigrade) scale in that the scale's zero is located at a temperature of —273.15 °C. The temperature read on this scale is known as *absolute temperature* and is denoted K (kelvin). As it will be shown later on, in Chapter 3, the concept of absolute temperature has a profound physical meaning and is one of the fundamental concepts of thermodynamics.

It is clear that using the concept of absolute temperature, Eqs. (1.10) and (1.12) can be represented in the following form:

$$\frac{v_2}{v_1}=\frac{T_2}{T_1} \tag{1.15}$$

and

$$\frac{p_2}{p_1}=\frac{T_2}{T_1}. \tag{1.16}$$

Let us consider now the sequence of two thermodynamic processes, the isothermal process *1-m* and the isobaric process *2-m* (Fig. 1.2). In the isothermal process *1-m* the compression of gas is described by Boyle's law

$$p_1 v_1 = p_m v_m \tag{1.17}$$

(where v_1 and v_m are specific volumes), and the subsequent heating of the gas in the isobaric process *2-m* satisfies Gay-Lussac's law

$$\frac{v_m}{v_2}=\frac{T_m}{T_2} \tag{1.18}$$

Since the process *1-m* is an isothermal one, it is clear that $T_1 = T_m$ and, consequently, from Eq. (1.18) we get:

$$v_m = v_2 \frac{T_1}{T_2}. \tag{1.19}$$

Since the process *2-m* is an isobaric one, $p_m = p_2$. Taking this fact into account, from Eqs. (1.17) and (1.19), we get:

$$\frac{p_1 v_1}{T_1} = \frac{p_2 v_2}{T_2}. \tag{1.20}$$

By analogy, transferring the gas into any third state with properties p_3, v_3, and T_3, it can be shown that

$$\frac{p_1 v_1}{T_1} = \frac{p_2 v_2}{T_2} = \frac{p_3 v_3}{T_3} = \text{const}. \tag{1.21}$$

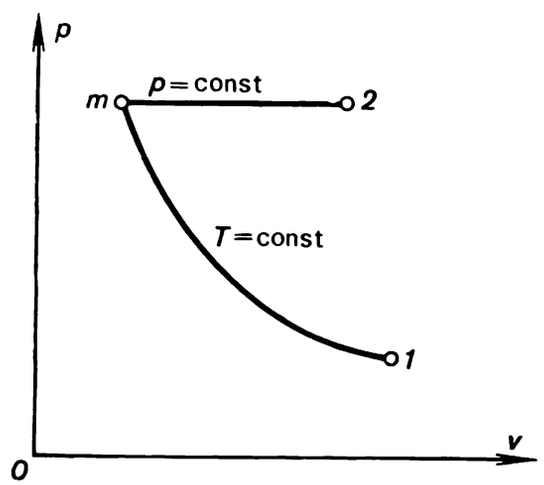

Fig. 1.2

Thus, for a gas in any state with properties p, v and T obeying the Boyle and Gay-Lussac laws,

$$\frac{pv}{T} = \text{const}. \tag{1.22}$$

The constant quantity in Eq. (1.22) does not depend on the state of the gas. It only depends on the properties of the gas and is individual for each gas. It is known as the gas constant. Denoting the gas constant by R, we find for Eq. (1.22) the following form:

$$pv = RT. \tag{1.23}$$

In this way we obtained an equation which relates unambiguously the properties p, v, and T of a gas, i.e. the equation of state of an ideal, or perfect, gas. This equation is known as the *Clapeyron equation*.

It was mentioned above that the Boyle and Gay-Lussac laws, used to derive Eq. (1.23), were formulated after experimental studies of low-pressure processes in gases.

It is understood that the instruments used by Boyle, Mariotte and Gay-Lussac were less accurate than modern pressure gauges and thermometers. In this connection a question arises of how accurate the above formulated gas laws are.

Precision experimental work has shown the actual behaviour of gases, even at low pressure, to deviate somewhat from that described by Eq. (1.23). However, the lesser the density of a gas, the more accurate Eq. (1.23) describes its behaviour.

The gas which strictly obeys Eq. (1.23) is referred to as an *ideal*, or *perfect*, *gas*, and Eq. (1.23) is known as the *equation of state of an ideal (perfect) gas*.

With respect to properties, a real gas is the closer to an ideal one, the smaller the density of the gas.

Equation (1.23) can be derived by the methods of the kinetic theory of gases, assuming the molecules of gas to be material points without molecular attraction. This is usually done in courses of general physics.

Thus, the concept of an ideal gas is based on the following assumptions:

an ideal gas strictly obeys Clapeyron's equation (the basic definition of an ideal gas);

Fig. 1.3

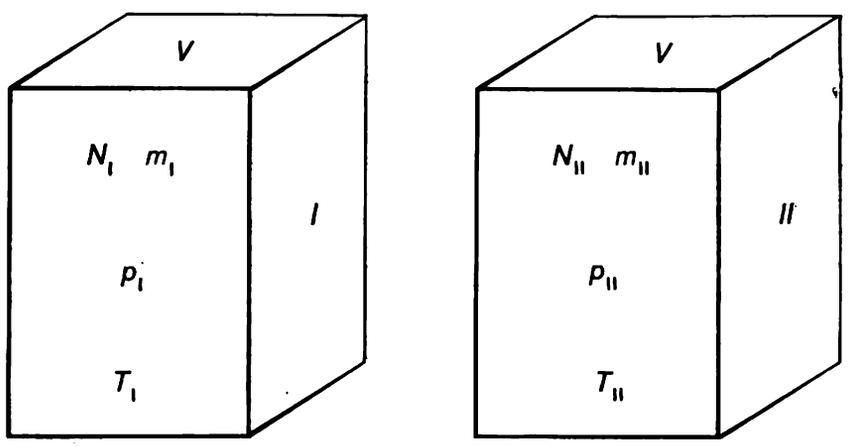

an ideal gas is the limiting state of a real gas at $\rho \to 0$;

an ideal gas is a gas whose molecules are considered to be material points, the interaction between them being restricted to collisions.

A real gas differs the more from an ideal gas, the greater its density. From the molecular-kinetic point of view, the "non-ideality" of a gas is due to the fact that molecules have their own volume and also to the existence of intermolecular interaction of a rather intricate nature.

What is then the sense of introducing the concept of the ideal, or perfect, gas? Firstly, in practice, we have to deal with gases at low pressures, at which various gas processes can be calculated with sufficient accuracy with the aid of the equation of state of an ideal gas.

Secondly, the concept of the ideal gas and the laws governing its behaviour happen to be useful as the limit of the laws governing the behaviour of real gases. This is important from the methodological and mainly from the practical point of view: later on it will be shown that it is expedient to regard a number of quantities characterizing the properties of a real gas (its heat capacity, for instance) as the similar quantities for an ideal gas and some correction factor, accounting for the non-ideality of the real gas. Such an approach proves to be highly fruitful in a number of cases.

Consider two equal volumes V of two ideal gases I and II (Fig. 1.3). Assume that the first volume, filled with gas I, contains N_I molecules of this gas under a pressure p_I and at a temperature T_I; also assume that the mass of one molecule of gas I is equal to m_I. Accordingly, the number of molecules in the second volume, filled with gas II, is N_{II}, the pressure is p_{II}, the tem-

perature is T_{II}, and the mass of one molecule of gas *II* is m_{II}. Now assume that the pressure and the temperature of the gases in the two volumes are the same.

In 1811 A. Avogadro suggested a hypothesis, now known as *Avogadro's law*:

Equal volumes of ideal gases at the same temperature and pressure contain equal numbers of molecules.

Avogadro's law permits the following important conclusion. The mass of gas *I* in the first volume can, obviously, be determined from the formula

$$G_I = N_I m_I, \tag{1.24}$$

and the mass of gas *II* in the second volume from

$$G_{II} = N_{II} m_{II}; \tag{1.25}$$

hence,

$$\frac{G_I}{G_{II}} = \frac{N_I m_I}{N_{II} m_{II}}. \tag{1.26}$$

It is clear that the ratio between the masses of molecules m_I/m_{II} is equal to the ratio between the molecular masses of these gases μ_I/μ_{II}. In accordance with Avogadro's law, $N_I = N_{II}$ and, consequently, it follows from equation (1.26) that

$$\frac{G_I}{G_{II}} = \frac{\mu_I}{\mu_{II}}, \tag{1.27}$$

i.e. the ratio between the masses of various ideal gases contained in equal volumes at equal pressure and temperature is equal to the ratio between the molecular masses of these gases.

Let us introduce the concepts of the mole and kilomole. A mole is defined as the amount of a substance expressed in grams and numerically equal to its molecular mass, and a kilomole is the amount of the substance expressed in kilograms and numerically equal to its molecular mass.* So, for instance, a kilomole of oxygen (O_2) equals 32 kg; a kilomole of carbon dioxide (CO_2), 44 kg; etc. It is clear that 1 kmol is equal to 1000 mol.

Let us formulate the second conclusion that follows from Avogadro's law and which is the reciprocal of the first conclusion, viz. the masses of various gases at same temperature and pressure, when related like the molecular masses, have the same volumes. This gives a basis for the conclusion that the molar volumes of different gases at the same temperature and pressure are equal to each other. If v is the specific volume of a gas, and μ its molecular mass, then the volume of a mole (the so-called *molar volume*) is equal to μv. Thus, for various ideal gases at the same temperature and pressure,

$$\mu v = \text{const}. \tag{1.28}$$

In accordance with Avogadro's law, it is clear that a kilomole of any ideal gas contains a fixed number of molecules, and this number is called the Avogadro (or Avogadro's) number, N_A. The numerical value of Avogadro's number has been found experimentally to be $N_A = 6.022\,169 \times 10^{26}$ kmol^{-1}.

---

* More strictly, a mole is defined as the amount of a substance containing a number of molecules equal to the number of atoms contained in 0.012 kg of the carbon isotope ^{12}C (accordingly, a kilomole, in 12 kg of this isotope).

Let us determine now the volume of one kilomole of an ideal gas under the so-called standard physical conditions, which as it is known from the course of general physics correspond to a pressure of $p = 760$ mm Hg $= 101.325$ kPa and a temperature of $t = 0$ °C. Since with given p and T the product μv does not depend on the kind of gas, its magnitude can be determined using the data on the specific volume of any ideal gas, of oxygen, for instance. The molecular mass of oxygen $\mu = 32$, and its specific volume, calculated by Clapeyron's equation, $v = 0.700$ m³/kg. Hence,

$$\mu v = 22.4 \text{ m}^3/\text{kmol}. \tag{1.29}$$

Thus, the volume of one mole, which is the same under similar conditions for all ideal gases, is equal to 22.4 m³/kmol under standard conditions.

It is sometimes convenient to express the mass of a gas in moles or in kilomoles. Denoting the number of moles (or kilomoles) of a gas by M, we find that

$$G = \mu M. \tag{1.30}$$

Let us turn to the problem of determining the gas constant R in Eq. (1.23). The magnitude of R can be easily calculated knowing the properties of the gas at any state.

Let us assume that the state of the gas is known under standard conditions. Then, substituting in Clapeyron's equation (1.23) $p = 101.325$ kPa and $T = 273.15$ K, we get:

$$R = pv/T = \frac{101\,325}{273.15} v = 371\ v. \tag{1.31}$$

Substituting the specific volume from Eq. (1.29) in Eq. (1.31), we obtain

$$R = \frac{8314}{\mu}. \tag{1.32}$$

Substituting the above value of the gas constant in equation (1.23), we get:

$$pv = \frac{8314}{\mu} T, \quad \text{or} \quad p\mu v = 8314T. \tag{1.33}$$

Formula (1.33) is the equation of state of an ideal gas for one kilomole, and the number 8314 is the gas constant reduced to one kilomole of the gas. This quantity is the same for all gases; it is called the *universal gas constant* and denoted by μR. The unit of measurement of the universal gas constant is J/(kmol-K).*

It follows from Eq. (1.33) that the gas constant of individual gases, R, is determined by their molecular or molar mass. So, for instance, for nitrogen ($\mu_{N_2} = 28$)

$$R_{N_2} = \frac{8314}{28} = 297 \text{ J/(kmol-K)}.$$

In Clapeyron's equation the individual properties of each given ideal gas are determined from the magnitude of its gas constant.

---

* More exactly, the universal gas constant $\mu R = 8314.34$ J/(kmol-K). The universal gas constant μR is sometimes expressed in other units: $\mu R = 847.83$ kgf-m/(kmol-K), or $\mu R = 1.9858$ kcal/(kmol-K). The quantity $k = \mu R/N_A$ is called *Boltzmann's constant* ($k = 8314.34/6.022\,169 \times 10^{26} = 1.380\,622 \times 10^{-23}$ J/K $= 1.380\,622 \times 10^{-16}$ erg/K).

It is clear from the above that the equation of state of an ideal gas (Clapeyron's equation) can take the following forms:

for 1 kg of gas (1.23)

$$pv = RT;$$

for G kg of gas, having in mind that $Gv = V$,

$$pV = GRT;$$

for one mole of gas

$$p\mu v = \mu RT.$$

Let us consider now how isotherms, isobars and isochors of an ideal gas are represented on the p-v, p-T and v-T diagrams (Fig. 1.4).

Fig. 1.4

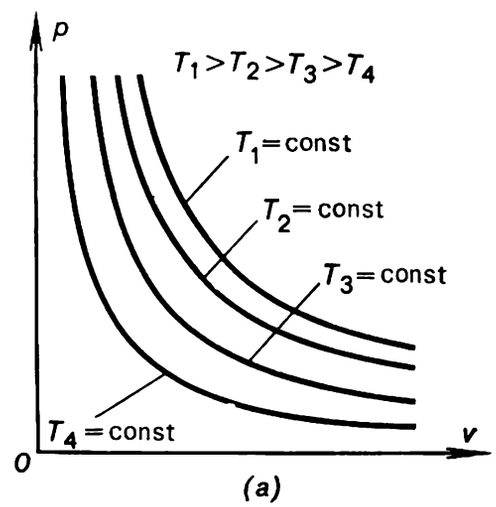

Since for an ideal gas pv = const when T = const, on the p-v diagram the isotherm will, obviously, be represented by an equilateral hyperbola (Fig. 1.4*a*), and the higher the temperature T, the higher is the isotherm in the p-v plane.

It follows from Eq. (1.23) that for an ideal gas the isochors are represented on the p-T diagram and the isobars on the v-T diagram by straight lines initiating at the origin of coordinates, as illustrated in Fig. 1.4*b*, *c*. It follows from Eq. (1.23) that

$$p = \frac{R}{v} T,$$

i.e. the slope of an isochor on the p-T diagram is equal to R/v, and, consequently, the greater v, the lesser the slope of the isochor.

Similarly, from

$$v = \frac{R}{p} T$$

it follows that on the v-T diagram the slope of an isobar is equal to R/p, indicating that the greater p, the lesser the slope of the isobar.

1.5 Concept of mixtures. Mixtures of ideal gases

Pure substances and mixtures

In thermodynamics the concepts of a pure substance and a mixture (solution) is used. By a *pure substance* we mean a substance all molecules of which are similar, or a substance which does not change chemically. A *mixture*, consisting of several pure substances, is referred to as a *solution*. Examples of pure substances are water, ethyl alcohol, nitrogen, ammonia, sodium chloride, and iron. Examples of mixtures are air, consisting of nitrogen, oxygen and a number of other gases. aqueous ammonia solutions, aqueous solutions of

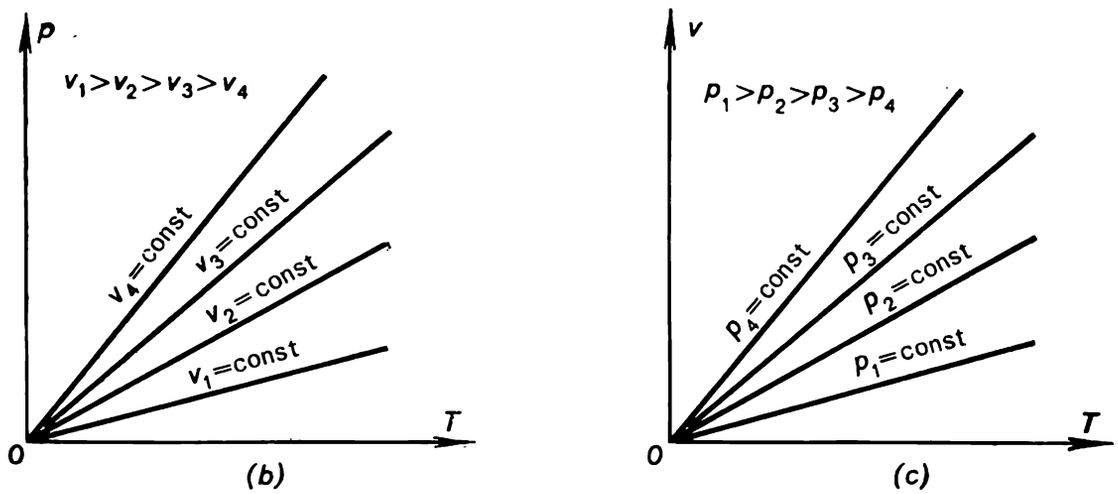

ethyl alcohol, various metal alloys. The pure substances making up a mixture are called *components* or *constituents*.

Determining the composition of a mixture

One of the most important characteristics of a mixture is its composition. The composition of a mixture is usually determined by finding the mass and molar fractions of the individual mixture components.

Let us consider a mixture consisting of G_1 kg of the first component, G_2 kg of the second component, G_3 kg of the third component, etc. The total mass of a mixture consisting of n components will be

$$G = \sum_{i=1}^{n} G_i. \tag{1.34}$$

The mass fraction of each component is defined as the ratio of the mass of the given component to the mass of the entire mixture

$$c_i = \frac{G_i}{G} \tag{1.35}$$

It follows from Eqs. (1.34) and (1.35) that

$$\sum_{i=1}^{n} c_i = 1. \tag{1.36}$$

Consequently, the mass fraction can be determined by the fraction of the given component contained in 1 kg of the mixture.

For a mixture consisting of two components (referred to as a *binary mixture*)

$$c_1 + c_2 = 1.$$

Therefore, the composition of the mixture is known if the mass fraction of one of the components is given. In a binary mixture, the mass fraction of the second component is usually denoted by c, and it is then evident that the mass fraction of the second component is $(1 - c)$. Thus, for a binary mixture

$$(1-c)=\frac{G_1}{G_1+G_2}=\frac{G_1}{G}, \quad c=\frac{G_2}{G_1+G_2}=\frac{G_2}{G}. \tag{1.37}$$

It is sometimes more convenient to determine the composition of a mixture by means of molar fractions. By a molar fraction of a mixture component is meant the ratio of the number of moles of the component considered to the total number of moles of the mixture.

Let a mixture contain M_1 moles of the first component, M_2 moles of the second component, M_3 moles of the third component, etc. The number of moles of the mixture is equal to

$$M=\sum_{i=1}^{n} M_i, \tag{1.38}$$

and the molar fraction of the ith component

$$N_i=\frac{M_i}{M}. \tag{1.39}$$

In accordance with Eqs. (1.38) and (1.39),

$$\sum_{i=1}^{n} N_i=1. \tag{1.40}$$

Thus, the molar fraction of a given component in a mixture can be defined as the number of moles (the fraction of a mole of this component) in one mole of the mixture:

$$N_1 + N_2 = 1.$$

Just as for mass fractions, the letter N is used below to denote the molar fraction of the second component in a binary mixture, and the molar fraction of the first component is denoted by $(1 - N)$. Then,

$$(1-N)=\frac{M_1}{M_1+M_2}=\frac{M_1}{M}, \quad N=\frac{M_2}{M_1+M_2}=\frac{M_2}{M}. \tag{1.41}$$

The relation existing between the mass and molar fractions permits, if necessary, to express one fraction in terms of the other. In order to find this relation, let us consider a mixture with an arbitrary number of components. If the molecular masses of the first, second, third, etc., components are respectively denoted by μ_1, μ_2, μ_3, . . ., μ_n, then the mass fraction of the ith component, c_i, can be expressed in terms of the molar fractions in the following way:

$$c_i=\frac{G_i}{\sum_{j=1}^{n} G_j}=\frac{M_i\mu_i}{\sum_{j=1}^{n} M_j\mu_j}=\frac{\frac{M_i}{M}\mu_i}{\sum_{j=1}^{n}\frac{M_j}{M}\mu_j}=\frac{N_i\mu_i}{\sum_{j=1}^{n} N_j\mu_j} \tag{1.42}$$

If the mass fractions of the components of a given mixture are known, the expression which can be used to determine the molar fraction N_i of any ith component of the mixture takes the form:

$$N_i = \frac{M_i}{\sum\limits_{j=1}^{n} M_j} = \frac{\dfrac{G_i}{\mu_i}}{\sum\limits_{j=1}^{n} \dfrac{G_j}{\mu_j}} = \frac{\dfrac{G_i}{G}\dfrac{1}{\mu_i}}{\sum\limits_{j=1}^{n} \dfrac{G_j}{G}\dfrac{1}{\mu_j}} = \frac{\dfrac{c_i}{\mu_i}}{\sum\limits_{j=1}^{n} \dfrac{c_j}{\mu_j}} \tag{1.43}$$

For a binary mixture, from Eqs. (1.42) and (1.43) it follows that for the first component

$$(1-c) = \frac{(1-N)\mu_1}{(1-N)\mu_1 + N\mu_2}$$

and

$$(1-N)\frac{\dfrac{1-c}{\mu_1}}{\dfrac{(1-c)}{\mu_1} + \dfrac{c}{\mu_2}} = \frac{(1-c)\mu_2}{(1-c)\mu_2 + c\mu_1}\ ; \tag{1.44}$$

for the second component

$$c = \frac{N\mu_2}{(1-N)\mu_1 + N\mu_2}$$

and

$$N = \frac{\dfrac{c}{\mu_2}}{\dfrac{(1-c)}{\mu_1} + \dfrac{c}{\mu_2}} = \frac{c\mu_1}{(1-c)\mu_2 + c\mu_1} \tag{1.45}$$

Mixtures of ideal gases. Dalton's law

Mixtures of various gases, the so-called gas mixtures, are considered as special cases of mixtures (solutions). It is of great interest to examine a gas mixture each component of which considered as an ideal gas. The idea of considering mixture components as ideal gases happens to be a good approximation for quite a number of gas mixtures at low pressures. Of such gas mixtures, air is of the greatest practical importance.

The basic law determining the behaviour of a gas mixture is *Dalton's law*:

Each individual gas behaves in a gas mixture as though it alone occupies the volume of the mixture at the mixture temperature.

In other words, each individual component of a gas mixture is under the pressure which it would exert if it alone occupied the volume of the mixture. This pressure is called the *partial pressure* of the given gas, and the partial pressure of each mixture component is respectively denoted by $p_1, p_2, p_3, \ldots$ $\ldots, p_n$. At first glance it may seem strange that it is indifferent for the given gas component whether there are any other gases in the volume or it alone occupies the space. However, there is nothing strange in the phenomenon, since we are dealing with ideal gases and, as mentioned above, the molecules of an ideal gas are, by definition, material points devoid of volume and not interacting with one another in any way, except by collision. The higher the pressure in a mixture, i.e. the more the states of the gases deviate from

the ideal state, the more the behaviour of the gas mixture is observed to deviate from that prescribed by Dalton's law.

Dalton's law can also be stated as follows:

The sum of the partial pressures of the ideal gases which are components of a gas mixture is equal to the total pressure of the mixture of gases:

$$p_{\text{mix}} = \sum_{i=1}^{n} p_i. \tag{1.46}$$

Dalton's law finds wide application in describing various mixtures of gases, and it will be repeatedly used in the book.

Composition of an ideal gas mixture. Volume fractions

If a component of an ideal gas mixture is not at its partial pressure at the temperature of the mixture but the total pressure of the mixture is exerted on it, its volume is V_i, which is referred to as the partial volume of the ith gas component. The ratio between the partial volume and the volume of the mixture is called the *volume fraction* of the given component:

$$r_i = \frac{V_i}{V_{\text{mix}}}. \tag{1.47}$$

The partial volume is determined from Boyle's law

$$p_{\text{mix}} V_i = p_i V_{\text{mix}},$$

where p_{mix} and V_{mix} are the pressure and volume of the mixture;

$$\sum_{i=1}^{n} p_{\text{mix}} V_i = \sum_{i=1}^{n} p_i V_{\text{mix}},$$

whence

$$p_{\text{mix}} \sum_{i=1}^{n} V_i = V_{\text{mix}} \sum_{i=1}^{n} p_i.$$

Since

$$p_{\text{mix}} = \sum_{i=1}^{n} p_i,$$

we get

$$V_{\text{mix}} = \sum_{i=1}^{n} V_i \quad \text{or} \quad \sum_{i=1}^{n} r_i = 1. \tag{1.48}$$

Thus, the total volume of a mixture of gases is equal to the sum of the partial volumes of its components.

If a gas comprises $M_1, M_2, \ldots, M_i$ moles of different gases, the volume fraction of the ith component is equal to:

$$r_i = \frac{V_i}{V_{\text{mix}}} = \frac{V_i}{\sum_{j=1}^{n} V_j} = \frac{M_i \mu_i v_i}{\sum_{j=1}^{n} M_j \mu_j v_j}. \tag{1.49}$$

Since for all gaseous components of the gas mixture, reduced to the same pressure p_{mix} and the same temperature T_{mix}, the volume of the moles is the same, we have

$$r_i = \frac{M_i}{\sum_{j=1}^{n} M_j} = \frac{M_i}{M_{mix}} = N_i. \tag{1.50}$$

Thus, the volume fraction of the component of a mixture of ideal gases is equal to the molar fraction of this component.

It follows from this that Eqs. (1.42) and (1.43) can be presented in the following form:

$$c_i = \frac{r_i \mu_i}{\sum_{j=1}^{n} r_j \mu_j}, \tag{1.51}$$

$$r_i = \frac{\frac{c_i}{\mu_i}}{\sum_{j=1}^{n} \frac{c_j}{\mu_j}}. \tag{1.52}$$

Apparent or average molecular (molar) mass of a mixture

In calculating mixtures of ideal gases, it is convenient to make use of the so-called apparent or average molecular (molar) mass of the mixture, which is the ratio of the mass of the mixture to the total number of moles of all mixture components:

$$\mu_{mix} = \frac{G_{mix}}{M_{mix}}. \tag{1.53}$$

Taking into account Eqs. (1.30), (1.35) and (1.38), we find that

$$\mu_{mix} = \frac{1}{\sum_{i=1}^{n} \frac{c_i}{\mu_i}} \tag{1.54}$$

and

$$\mu_{mix} = \sum_{i=1}^{n} r_i \mu_i. \tag{1.55}$$

Gas constant of a mixture

For the ith component of a mixture of ideal gases with a volume V_{mix} Clapeyron's equation will obviously take the form

$$p_i V_{mix} = G_i R_i T_{mix}.$$

Writing this equation for all components of the mixture and summing the left-hand and right-hand sides, we get:

$$V_{mix} \sum_{i=1}^{n} p_i = T_{mix} \sum_{i=1}^{n} G_i R_i. \tag{1.56}$$

In accordance with Dalton's law, $\sum_{i=1}^{n} p_i = p_{mix}$, whence

$$p_{mix}V_{mix} = T_{mix} \sum_{i=1}^{n} G_i R_i. \tag{1.57}$$

On the other hand, for a mixture of ideal gases Clapeyron's equation can obviously take the following form:

$$p_{mix}V_{mix} = G_{mix}R_{mix}T_{mix}, \tag{1.58}$$

where R_{mix} is the gas constant of the mixture.

It follows from Eqs. (1.57) and (1.58) that

$$R_{mix} = \frac{\sum_{i=1}^{n} G_i R_i}{G_{mix}} = \sum_{i=1}^{n} c_i R_i. \tag{1.59}$$

Since

$$R_i = \frac{8314}{\mu_i},$$

from Eq. (1.59) we get

$$R_{mix} = 8314 \sum_{i=1}^{n} \frac{c_i}{\mu_i}, \tag{1.60}$$

whence, with account taken of Eq. (1.57), we should get:

$$R_{mix} = \frac{8314}{\mu_{mix}}. \tag{1.61}$$

Substituting μ_{mix} from Eq. (1.55), we obtain:

$$R_{mix} = \frac{8314}{\sum_{i=1}^{n} r_i \mu_i}. \tag{1.62}$$

Determining partial pressures

Since $p_i V_{mix} = p_{mix} V_i$ and $V_i/V_{mix} = r_i$,

$$p_i = r_i p_{mix}$$

and

$$\frac{p_i}{p_{mix}} = r_i = N_i. \tag{1.63}$$

1.6 Concept of heat capacity

The *heat capacity* of a body is defined as the quantity of heat required to raise the temperature of the body by one degree.

It follows from this definition that the heat capacity of substance is an extensive property of a body. Indeed, the heat capacity of a given body is the greater, the greater the amount of substance contained in this body. For instance, the heat capacity of 10 kg of water is five times greater than the heat capacity of 2 kg of water.

The heat capacity of a unit mass of substance is given the name of *specific heat*. In accordance with what was said in Sec. 1.2, it is clear that specific heat is an intensive property of a substance, i.e. its magnitude does not depend on the amount of substance in the system.

Average heat capacity and true heat capacity

Heat capacity will be denoted by c.* From the definition of heat capacity, it follows that

$$c = \frac{q_{12}}{t_2 - t_1}, \tag{1.64}$$

Fig. 1.5

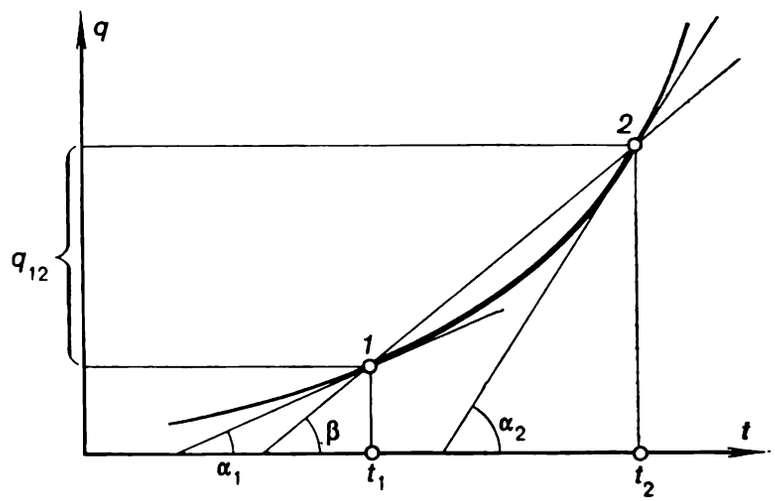

where t_1 is the initial temperature, t_2 the final temperature, and q_{12} the heat added to unit mass of substance while heating it from temperature t_1 to temperature t_2.

Heat capacity is not a constant quantity. It changes with temperature, the dependence being quite substantial in a number of cases. Therefore, the heat capacity determined from formula (1.64) for the temperature interval $t_2 - t_1$ is called the *average heat capacity***, as distinguished from the so-called *true heat capacity* which is defined as the derivative of the quantity of heat added to the body with respect to the temperature of this body:

$$c = \frac{dq}{dt}, \tag{1.65}$$

whence

$$q_{12} = \int_{t_1}^{t_2} c\, dt. \tag{1.66}$$

If we plot the amount of heat added to the body versus temperature (Fig. 1.5), it is clear that due to the variation of heat capacity the dependence will be represented by the curve $q = f(t)$ and not by a straight line. In accor-

* Not to be confused with the notation of the mass fraction of a mixture.

** The average heat capacity is usually denoted by c_m or $c_m \Big|_{t_1}^{t_2}$ (the second symbol indicates the temperature interval for the particular average heat capacity).

dance with Eq. (1.66), on the curve $q = f(t)$ the average heat capacity can be considered to be equal to the slope of the secant passing through points *1* and *2*, i.e. to tan β, and the true heat capacities in the states *1* and *2*, to tan α_1 and tan α_2, respectively.

Knowing the dependence of the true capacity on temperature, we can easily determine the average heat capacity in a given temperature interval:

$$c_m = \frac{\int_{t_1}^{t_2} c\,dt}{t_2 - t_1}. \tag{1.67}$$

Mass, molar and volume heat capacities

Mass heat capacity, c, is defined as the amount of heat required to raise the temperature of unit mass of substance (usually 1 kg or 1 g) by 1 °C.

Molar heat capacity, μc, is the name given to the heat capacity reduced to one mole (or kilomole) of substance.

The *volume heat capacity*, C, is defined as the heat capacity reduced to unit volume of substance (usually to 1 m^3).

It is obvious that

$$C = \rho c. \tag{1.68}$$

In practice, use is made of the mass heat capacity, which will be referred to below as heat capacity.

Dependence of heat capacity on process

Depending on the nature of the process of adding heat, the amount of heat to be added to a body so as to raise its temperature by 1 degree will differ. When speaking of heat capacity, therefore, it is necessary to specify which particular process of adding heat to a body is involved.

To put it differently, the quantity q, present in Eq. (1.65), depends not only on the temperature interval, but also on the kind of the process of adding heat. In Eq. (1.65), therefore, the amount of added heat q must be given a subscript characterizing the kind of process involved,

$$c_x = \frac{dq_x}{dt}, \tag{1.69}$$

where the subscript x indicates the property which is preserved constant in the given process.

In practice, the heat capacities of the isobaric ($x = p =$ const) and isochoric ($x = v =$ const) processes are usually employed. These heat capacities are referred to as the isobaric and isochoric heat capacities and they are denoted by c_p (heat capacity at constant pressure) and c_v (heat capacity at constant volume).

2

The first law of thermodynamics

2.1 Heat. Joule's experiment. Equivalence of heat and work

Heat is one of the most essential concepts of thermodynamics. By its nature the concept of heat is very close to the concept of work. Both heat and work are forms of transfer of energy. There is, therefore, no sense in saying that a body stores some heat or work. We can only state that a certain amount of heat or work has been imparted to, or taken away from, a body.

The difference between heat and work consists in that they are different forms of transfer of energy. Heat is such a form of transfer of energy which is associated either with direct contact between bodies (heat conductivity, convection) or with radiant transfer of energy. Work is regarded as another mechanism of energy transfer. Mechanical work is always associated with a change in the volume of the body involved.

It is customary to assume that addition of heat involves a rise in the temperature of the body, determined by the energy of the microparticles constituting the body, which is often the case. But, as it will be seen later on, it happens that not withstanding the addition of heat to a body its temperature decreases. All depends on the balance of the energy transferred to the body and removed from it. In the special but most widespread case the change in the temperature of a body is determined by the relation between the amounts of heat and work imparted to the body and removed from it.

In the course of the development of science the ideas about heat varied. From the time of Aristotle the predominant idea of heat consisted in that heat was assumed to be one of the "primary qualities" of matter, with this "primary quality" being inherent to every body to a different degree. As long ago as the seventeenth century, it was evident

3—01397

that in the works of Descartes and Bacon attempts were made to relate the idea of heat with the motion of particles of which bodies consist. In the eighteenth century, in connection with the wide development of calorimetry, a new scientific idea appeared of the so-called caloric or phlogiston, an inviscid (non-viscous) and invisible liquid passing from bodies at a higher temperature to bodies at a lower temperature when they come or are brought into contact; the increase in the temperature of a body was thought to be due to the increase in the content of the caloric or phlogiston in the body. It ought to be mentioned that as long ago as 1760 the famed Russian scientist M. V. Lomonosov rejected the theory of the phlogiston, postulating the idea of heat as a form of motion of particles.

At the end of the eighteenth centuries works appeared refuting the theory of the phlogiston. One of the first works in this field involved an experiment conducted by the English physicist Benjamin Thompson (Count Rumford) in 1798. During the experiment a blunt cutter was pressed to the internal surface of a barrel of a gun rotating about its

Fig. 2.1

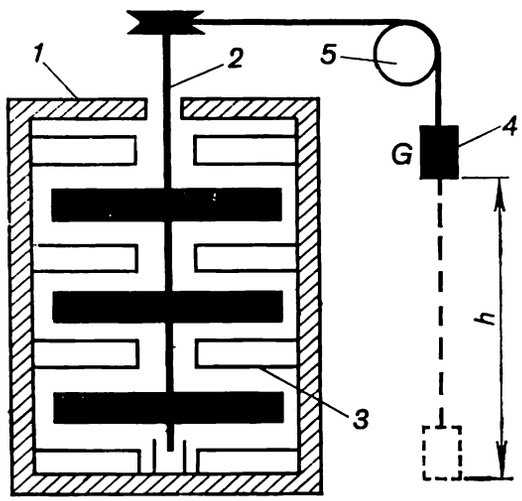

axis. Rumford discovered that resulting from the friction between the cutter and barrel, the temperature of the barrel increased, due to the liberation, or release, of heat. It was also found that in the course of the experiment, heat was liberated as long as the barrel rotated. Analyzing the results, Rumford concluded that if an insulated body or a system of bodies is capable of an unlimited liberation of heat, then the heat is not a material substance and only motion is able to ensure a continuous "excitation and propagation of heat in our experiments". Simultaneously with Rumford s work, the experiments of another English scientist, Sir Humphry Davy, dealt a hard blow on the theory of the phlogiston. The scientist demonstrated that it is possible to melt two pieces of ice or fat or wax by simply rubbing them against each other, without bringing them in contact with a higher-temperature body.

In 1844-1854 the English scientist J. P. Joule conducted experiments which were destined to play an important role in science. The objective of Joule's experiment was to establish a relation between the amount of work spent to bring about the liberation of heat and the amount of the heat liberated. The layout of Joule's experiment was as follows (Fig. 2.1). Paddle wheel *2* was submerged in the heat-insulated vessel *1* to the walls of which vanes *3* were fastened, the vanes interfering with the motion of water due to rotation of the paddle. Rotation was imparted to the paddle (stirrer) by the falling load *4* of weight G, connected to the paddle by means of a rope and pulley *5*. As the weight falls through a distance Δh, the work done by it (and, consequently, by the stirrer) is equal to the decrease in the potential energy of the weight $G\Delta h$. The heat liberated in the water-filled vessel is calculated from the rise in water temperature, measured with a thermometer.

It should be noted that before the nature of heat was finally established, sufficiently accurate methods of measuring the amount of heat (calorimetry) were elaborated. The mass of water was measured in advance, and the absorption of heat by the walls of the vessel, vanes and the paddle wheel was taken into account. The heat capacities of water and metal (copper) were known. Based on the results of a series of thoroughly conducted experiments, Joule discovered a direct proportionality between the spent work L and the quantity of heat obtained Q:

$$Q = AL, \tag{2.1}$$

where A is a proportionality factor.

Joule found that the proportionality factor A remains the same irrespective of the method of heat production, type of work, temperature of the body involved, etc.

In other words, Joule established that when one and the same amount of work is spent, one and the same amount of heat is liberated. Thus, the amount of liberated heat was shown to be equivalent to the amount of work spent; it is clear that this relationship is true for the case when work is accomplished at the expense of heat.

Using the results of these measurements, Joule calculated the magnitude of A, which is known as the *thermal equivalent of work*, and of J, referred to as the *mechanical equivalent of heat*:

$$A = 0.002\,345 \text{ kcal/(kgf-m)}$$

and

$$J = 427 \text{ kgf-m/kcal}.$$

It is obvious that

$$J = 1/A.$$

Later on the values of A and J, obtained by Joule, were somewhat improved; in accordance with the results obtained after very accurate up-to-date measurements,

$$J = 426.935 \text{ kgf-m/kcal}.$$

As it was already mentioned, sufficiently accurate methods of measuring heat (calorimetry), based on using the notions of temperature and heat capacity of a body, had been elaborated as far back as the eighteenth century, i.e. long before the nature of heat was finally elucidated. In its time the most common unit of heat was the *calorie*, which was defined as the amount of heat required to raise the temperature of 1 g of water by 1° C. However, it was found later that the heat capacity of water changes somewhat with temperature. Therefore, at different temperatures different amounts of heat are required to raise the temperature of 1 g of water by 1° C. In this connection it became necessary to

Table 2.1 Relations between different units of work and heat

Unit	J	erg	kgf-m	kcal	kW-h
1 J		10^7	0.101 972	$2.388\,46\times10^4$	2.7778×10^{-7}
1 erg	10^{-7}		10.1972×10^9	23.8846×10^{-12}	27.778×10^{-15}
1 kgf-m	9.806 65	98.0665×10^6		$2.342\,28\times10^{-3}$	2.724×10^{-6}
1 kcal	4186.8	41.868×10^9	426.935		1.163×10^{-3}
1 kW-h	3.6×10^6	36×10^{12}	367.098	859.845	

define the calorie with a greater accuracy, and the so-called *15° calorie* was introduced, defined as the amount of heat required to raise the temperature of water from 14.5 °C to 15.5 °C. At the present time work and heat are measured in different units; the relations between them are given in Table 2.1. The units most widely spread are the joule and the *international calorie* (4.1868 J = 1 cal).

Shortly after Joule's experiments, the molecular-kinetic theory was elaborated, according to which heat is the energy of the chaotic thermal motion of the microparticles of a body.

From here on, to simplify notation the thermal equivalent of work A and the mechanical equivalent of heat J will not be used in the thermodynamic equations, heat and work will be measured in the same units.

2.2 Law of conservation and conversion of energy

The *law of conservation and conversion of energy* is the fundamental general law of nature. This law states that

Energy does not vanish nor does it appear anew, it only passes from one form of energy into another in various physical and chemical processes.

In other words, for any isolated system (i.e. a thermodynamic system which exchanges no heat, work, or substance with the surroundings) the amount of energy in the system remains constant.

The law of conservation of energy was known long ago in mechanics, as applied to mechanical (kinetic and potential) energy. After the equivalency of work and heat had been elaborated by the works of Joule and other scientists, the law of conservation of energy was spread to cover other kinds of energy and, in accordance with its content, it became known as the law of conservation and conversion of energy.

At the present time, different kinds of energy are known, the energy of thermal motion of microparticles of a body, the kinetic energy of the body as a whole, the gravitational field energy (in particular, the potential energy of a body lifted above the ground), magnetic field energy, the energy of electromagnetic radiation, nuclear energy, etc. The law of conservation and conversion of energy relates unambiguously all kinds of energy in the process of their mutual conversion. It is also referred to as the *first law of thermodynamics*. It should be noted once more that the first law of thermodynamics is of a general nature.

2.3 Internal energy and external work

Let us consider the process of adding heat from the outside, or from some heat source, to some body whose volume is maintained constant (for instance, to a gas kept in a vessel of constant volume). As it is generally known from experience, the addition of heat to a body results in a rise in its temperature.

In accordance with the law of conservation and conversion of energy, the heat added to a body corresponds to the increase of its internal energy. The latter, denoted by U, is the sum of the energies due to the translational and rotational motion of molecules of a body, the energy of intermolecular oscillations, the potential energy of intermolecular adhesion forces, inter-

molecular energy, nuclear (the energy of the atomic electron shells) and intranuclear energy.

The process of adding heat to a body was considered above as taking place in a way so that the volume of the body remains constant. It is common knowledge that in the general case bodies usually will expand upon heating. Consequently, in the general case the volume of a body will increase upon heating. If the body considered is placed in surroundings under a pressure p_m, then, as the volume of the body increases, work will be accomplished against the forces of external pressure p_m. Indeed, let us consider the increase in volume V of a body of arbitrary shape placed in surroundings

Fig. 2.2

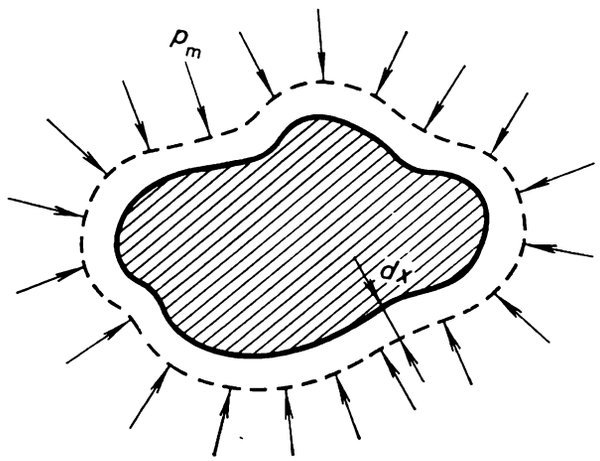

under a pressure p_m (Fig. 2.2). The area of the surfaces of the body shall be denoted by F. If the change in the volume of the body is considered to be an infinitesimal, dV, this increase in volume can be visualized as the displacement of each point of the surface of this body through a distance dx. Since pressure is the force exerted normal to a unit area of the body, it is obvious that the sum of the forces acting upon the entire surface of the body will be $P = p_m F$. The work done to shift the surface F of the body through a distance dx, not withstanding the counteraction offered by the external pressure, is

$$dL = p_m F\, dx, \tag{2.2}$$

and since

$$F\, dx = dV, \tag{2.3}$$

we get:

$$dL = p_m\, dV. \tag{2.4}$$

It follows from Eq. (2.4) that with a finite change in volume,

$$L = \int_{V_1}^{V_2} p_m\, dV. \tag{2.5}$$

The work L done against the forces of external pressure and associated with the change in the volume of a system is called the *work of expansion* done by the system on the surroundings.

It should be emphasized that the work of expansion against the forces of external pressure is done only when the body involved undergoes a change

in volume V (and when the external pressure is not zero). Below in the book we shall deal mainly with processes in equilibrium for which the equality $p_m = p$ is true. So, unless otherwise specified, for the work of expansion we shall use the following relationships

$$dL = p\,dV \tag{2.4a}$$

and

$$L_{12} = \int_{V_1}^{V_2} p\,dV, \tag{2.5a}$$

derived from (2.4) and (2.5), substituting p for p_m.

Fig. 2.3

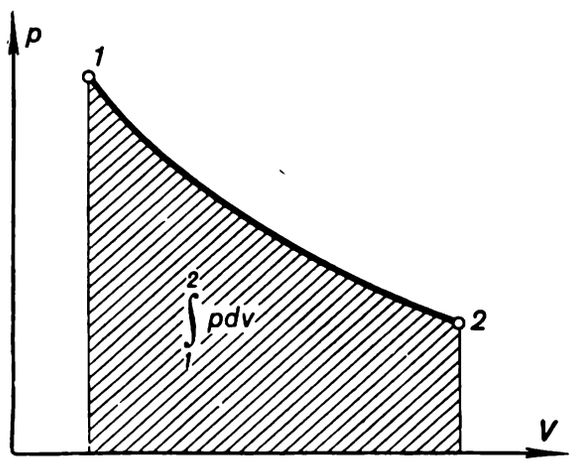

It is convenient to calculate the work of expansion determined by Eq. (2.5a) with the aid of the p-V diagram. Let us see how the process involving a change in the volume of a system is represented on this diagram (Fig. 2.3). The volume of the system changes from V_1 to V_2. The states that the system undergoes in the process of expansion are located on the curve, or path, of the process, between points *1* and *2*. It is clear from Eq. (2.5a) that the work done by the expanding system is represented on the p-V diagram by the shaded area below the path of the process (Fig. 2.3).

It should be stressed that the magnitude of the work of expansion accomplished by a system, expanding from the state with volume V_1 to the state with volume V_2, depends not only on the properties of these states but also on the path of the process of expansion. Indeed, as can be seen from the p-V diagram depicted in Fig. 2.4, the magnitude of the integral

$$L = \int_{V_1}^{V_2} p\,dV$$

will be different, depending on the path (A, B or C) of the process of expansion. Thus, the **work of expansion is a function of the process.**

It will also be recalled that in mechanics the work performed by some arbitrary force $\mathscr{F}$ is the name given to the integral

$$L_{12} = \int_1^2 \tilde{\mathscr{F}}\,dx, \tag{2.6}$$

where $\tilde{\mathscr{F}}$ is the projection of force $\mathscr{F}$ on the direction of the elementary displacement of the body, dx (or, more accurately, of the coordinate characterizing the position of the body), acted upon by this force.

It is clear that for the work of expansion (2.5) is a particular case of (2.6). In the general case, in addition to the work of expansion, a body is capable of performing other kinds of work, for instance, the work spent to increase the surface of the body overcoming the forces of surface tension, the work involved in displacing the body in a gravitational, electric or magnetic field, etc. The work calculation formulas for all these cases will be of a similar structure, like Eq. (2.6), i.e.

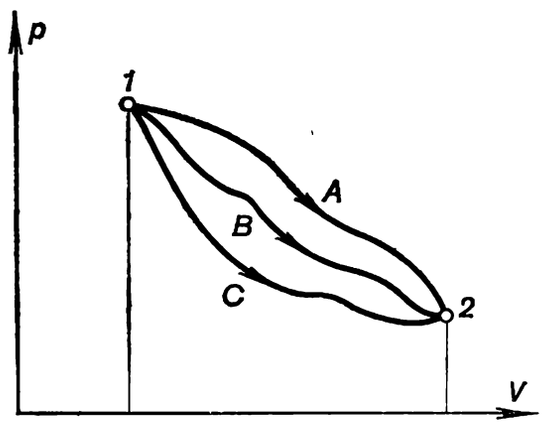

Fig. 2.4

$$dL = y\,dY \tag{2.7}$$

and correspondingly

$$L_{12} = \int_1^2 y\,dY, \tag{2.8}$$

where y is the external force acting upon the body (system), and Y the property of state (coordinate) of the system associated with the force y.

The force y is known as the *generalized force*, and Y is referred to as the *generalized coordinate*.

If a system is acted upon simultaneously by several different forces, the work performed by this system will be equal to the sum of the works done by the system due to each of the acting forces

$$dL = \sum_{i=1}^{n} y_i\,dY_i \tag{2.9}$$

and

$$L_{12} = \sum_{i=1}^{n} \int_1^2 y_i\,dY_i, \tag{2.10}$$

where y_i is the generalized force, Y_i the generalized coordinate associated with the ith force, and n the number of generalized forces.

It is clear that in the general case when the system performs only work of expansion, $n = 1$, $y_i = p$, $Y_i = V$. But if, for instance, the height h to

which a body of mass G is elevated changes, i.e. if the potential energy of the body in the gravitational field changes, then, as it is known from mechanics, work is being done against the gravity of the body Gg. For this case, obviously, $y_i = Gg$, $Y_i = h$ and, in accordance with Eqs. (2.9) and (2.10) and allowing for G = const, we have

$$dL = Gg\, dh \tag{2.11}$$

and

$$L_{12} = Gg\,(h_2 - h_1). \tag{2.12}$$

Since below we shall mainly consider systems which perform only work of expansion against forces of external pressure, any kind of work shall be denoted by L, and any kind of work, except the work of expansion, by L^*. Then

$$dL = p\, dV + dL^* \tag{2.13}$$

and

$$L_{12} = \int_{V_1}^{V_2} p\, dV + L^*_{12}. \tag{2.14}$$

Equations (2.13) and (2.14) are written for a system whose mass is G. For a unit mass (1 kg, 1 g, etc.) these equations take the form

$$dl = p\, dv + dl^*; \tag{2.13a}$$

$$l_{12} = \int_{V_1}^{V_2} p\, dv + l^*_{12}, \tag{2.14a}$$

where l is the work per a unit mass of the substance.

2.4 Mathematical statement of the first law of thermodynamics

In the general case, when the addition of heat to a body results in a rise in the temperature of the body, and external work is performed due to an increase in the volume of the body, the heat added to the body is expended to increase its internal energy U and to accomplish work L. This statement can be expressed by the formula

$$Q_{12} = \Delta U_{12} + L_{12}, \tag{2.15}$$

where Q_{12} is the heat added to the body while heating it from state *1* to state *2*; ΔU_{12} the change in the internal energy of the body during the same process equal, as it will be shown below, to the difference between the internal energies of the system at points *2* and *1*; and L_{12} the work done by the body in the process $1 \rightarrow 2$.

Equation (2.15) is the mathematical expression of the first law of thermodynamics, which is a particular case of the more general law of conservation of energy.

When expressed in differential form, the same relationship takes the following appearance:

$$dQ = dU + dL. \tag{2.16}$$

Below, the heat added to a system will be considered as positive, and the heat removed, or rejected, from the system, as negative. Accordingly, the work done by a system will be referred to as positive, and the work done on a system as negative. It is clear that the choice of sign is absolutely arbitrary: an opposite system of signs could be chosen just as well. It is only necessary to observe a uniformity in all further thermodynamic reasonings and calculations.

In the preceding paragraph, the work of expansion has been shown to depend on the path of the process of expansion, i.e. to be a function of the process. It can be easily shown that the heat added to the system is also a function of the process, since the amount of added heat depends on the amount of work done.

As to the internal energy of the body (system), for a given body its magnitude depends only on the state of the body. This point follows from the law of conservation of energy and is independent on how true are our ideas about the microstructure of matter.

The work expended in Joule's experiment (Sec. 2.1) must, obviously, accumulate in the water filling the copper vessel in the form of the intrinsic energy of the water, depending only on its state, or on the internal energy of the water.

On the basis of the objectives of engineering thermodynamics, there is no need to consider the nature of the internal energy of a substance from the point of view of the microstructure of the substance. It will only be recalled that according to modern ideas the internal energy of a substance can be visualized as the sum of the kinetic and potential energies of the molecules (atoms, ions, electrons) of this substance. A fraction of the internal energy changes only as a result of chemical transformations and must be accounted for only in processes accompanied by chemical changes.

It follows from the foregoing that the change in the internal energy of a body undergoing some process is independent of the nature of the process and is determined unambiguously by the initial and final states of the body.

With account taken of the fact that the change in the internal energy in a thermodynamic process is equal to the difference in internal energies at the initial and final states of the process, i.e.

$$\Delta U_{12} = U_2 - U_1,$$

the equation expressing the first law of thermodynamics in the integral form (2.15) can be represented as follows:

$$Q_{12} = (U_2 - U_1) + L_{12}. \tag{2.15a}$$

Internal energy is an extensive property of substance, i.e. U is proportional to the amount of substance G in the system. The quantity

$$u = \frac{U}{G}, \tag{2.17}$$

called the *specific internal energy*, is the internal energy of a unit mass of substance.

For the sake of brevity, the specific weight internal energy u will be referred to as internal energy, and the quantity U as the total internal energy of the entire system.

If the mass G of the system remains constant, with account taken of Eq. (2.17), the equation expressing the first law of thermodynamics takes the following form:

$$q_{12} = (u_2 - u_1) + l_{12} \tag{2.18}$$

and

$$dq = du + dl, \tag{2.19}$$

where q is the amount of heat added to (or removed from) unit mass of substance (for instance, 1 kg or 1 g), and l the amount of work performed by a unit mass of substance (or work done on this amount of substance).

With account taken of Eqs. (2-13a) and (2.14a), the equations of the first law of thermodynamics take the form:

$$q_{12} = (u_2 - u_1) + \int_{v_1}^{v_2} p\,dv + l^*_{12} \tag{2.20}$$

and

$$dq = du + p\,dv + dl^*. \tag{2.21}$$

For the case in which the only kind of work done by the system is that of expansion, Eqs. (2.20) and (2.21) take the form:

$$q_{12} = (u_2 - u_1) + \int_{v_1}^{v_2} p\,dv \tag{2.22}$$

and

$$dq = du + p\,dv. \tag{2.23}$$

For the entire system we can write

$$Q_{12} = (U_2 - U_1) + \int_{V_1}^{V_2} p\,dV + L^*_{12} \tag{2.24}$$

and

$$dQ = dU + p\,dV + dL^*; \tag{2.25}$$

also

$$Q_{12} = (U_2 - U_1) + \int_{V_1}^{V_2} p\,dV \tag{2.26}$$

and

$$dQ = dU + p\,dV. \tag{2.27}$$

Similar to a number of other thermodynamic quantities, the internal energy is an additive quantity.

The name additive is given to quantities whose magnitude for a system is equal to the sum of these quantities for each of the components of the system. If we denote some thermodynamic quantity by Z, then if this quantity is an additive one:

$$Z_{\text{sys}} = \sum_{i=1}^{n} Z_i,$$

where the subscripts "sys" and i, respectively, refer to the entire system and to its component (the number of the system's components is n).

Intensive quantities (such as pressure, temperature) lack the property of additivity.

Internal energy is measured in the same units as heat and work (Table 2.1).

The absolute value of internal energy is essential for chemical thermodynamics in calculating chemical reactions, and we shall return to it in Chapter 15. But in most engineering applications of thermodynamics it is not the absolute magnitude of U that is of importance but the change of this quantity in various thermodynamic processes.

From this it follows that for internal energy the reference point can be chosen arbitrarily.* So, for instance, in accordance with an international argument the reference point for water is assumed to be the magnitude of internal energy at a temperature of 0.01 °C and a pressure equal to 610.8 Pa = = 0.006 228 kgf/cm² (the so-called *triple point*).

In Chapter 1 it was stated that for a pure substance any quantity which is a function of state is determined unambiguously if any two other properties of the substance in this state are given. So, for instance, the specific volume of a substance is determined unequivocally if pressure p and temperature T are given. Analogously, internal energy is a function of any two properties of state, and we can also write

$$u = f(v, T),$$

or

$$u = \varphi(p, T),$$

or

$$u = \psi(p, v).$$

For a number of practical applications it is most convenient, as it shall be shown below, to express internal energy as a function of specific volume and temperature: $u = f(v, T)$.

From integral calculus it is known that if the magnitude of a line integral is independent of the path of integration and is determined only by the initial and final points, or limits, of integration, the integrand is a total differential. The total differential dz of a function of two independent variables $z = f(x, y)$ is the name given to the sum

$$dz = \left(\frac{\partial z}{\partial x}\right)_y dx + \left(\frac{\partial z}{\partial y}\right)_x dy. \tag{2.28}$$

The subscripts found at each of the partial derivatives show that this derivative was taken assuming the subscript to be constant.

Inasmuch as the line integral of any function of state (including the function of u) is independent of the path of integration, the differential of any function of state is a total differential. In particular, for internal energy $u = f(T, v)$ we can write

$$du = \left(\frac{\partial u}{\partial T}\right)_v dT + \left(\frac{\partial u}{\partial v}\right)_T dv. \tag{2.29}$$

As for such functions of a process as heat and work, it can be shown (see Sec. 4.1) that their differentials are not total differentials. From this viewpoint the quantities dq and dl are merely infinitesimal quantities of heat and work.

---

* This statement holds for pure substances and for mixtures of substances which do not react with each other chemically.

From the mathematical formulation of the first law of thermodynamics, Eq. (2.23), applied to an isochoric process ($dv = 0$) it follows that

$$dq_v = du, \tag{2.30}$$

i.e. the heat added to a system undergoing an isochoric process is only spent to change the internal energy of the system. From this it follows that the expression for the constant-volume heat capacity c_v which, in accordance with Eq. (1.69), is expressed as

$$c_v = \frac{dq_v}{dt},$$

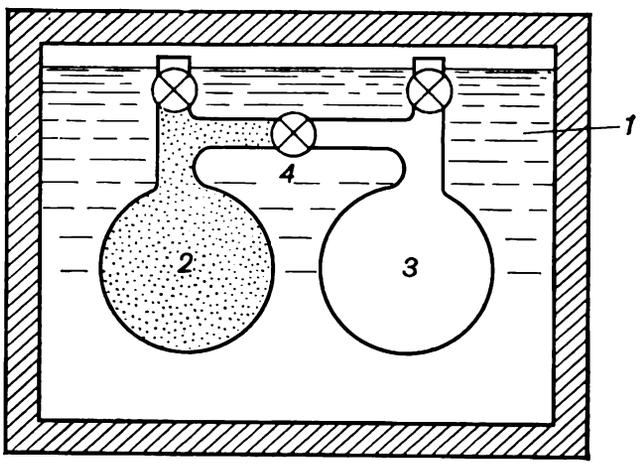

Fig. 2.5

can take the following form:

$$c_v = \left(\frac{\partial u}{\partial T}\right)_v. \tag{2.31}$$

This expression can be regarded as the definition of the heat capacity c_v. It shows that the heat capacity c_v characterizes the rate of growth of internal energy u with temperature T in an isochoric process.

It is clear that with account taken of equation (2.31) the expression for the differential of internal energy (2.29) takes the following form

$$du = c_v\, dT + \left(\frac{\partial u}{\partial v}\right)_T dv. \tag{2.29a}$$

The partial derivative $(\partial u/\partial v)_T$ characterizes the dependence of internal energy of a substance on the specific volume v. The nature of this dependence shall be elucidated in Chapter 4. Here we shall only consider the nature of the dependence of internal energy on the specific volume for an ideal gas.

In 1806 Gay-Lussac investigated experimentally the dependence of the internal energy of a gas on volume. A similar experiment was later repeated by Joule with a greater degree of accuracy.

The outfit of Gay-Lussac—Joule's experiment is shown schematically in Fig. 2.5. Two vessels (*2* and *3*), interconnected by a pipe and cock *4*, were placed into thermostat *1*, filled with water and reliably heat insulated. Cock *4* was closed. Vessel *2* contained a gas under a pressure p_{I}, and air was evacuated from vessel *3* (the pressure in the vessel $p_{\mathrm{II}} \cong 0$). The pressure of the gas filling vessel *2*, p_{I}, was so low that the gas could be considered to be an

ideal gas obeying Clapeyron's equation. Before the beginning of the test, the temperature of the water and that of the vessels dipped in it had time to even out (denote this temperature by t_1). Then, cock *4* was opened and part of the gas passed from vessel *2* into vessel *3*, so that the pressure in the two vessels evened out to some pressure p (it is clear that $p_{\mathrm{I}} > p > p_{\mathrm{II}}$). As a result the temperature of the gas passing into vessel *3* somewhat increased, and the temperature of the gas remaining in vessel *2* dropped. However, in a rather short interval of time, due to the intensive heat transfer between the vessels *2* and *3* and the water filling the thermostat, a temperature equilibrium set in again over the entire volume of the thermostat, with the temperature of the thermostat after the end of the experiment, t_2, being equal to the thermostat temperature at the beginning of the test:

$$t_1 = t_2.$$

Let us analyze the result obtained.

As was already mentioned, the system undergoing the test (thermostat with water and the vessels dipped in the water) was ensured dependable heat insulation and was of a sufficiently rigid construction (so that the volume of the system would remain practically constant in the course of the experiment). Consequently, there was neither heat nor external work exchange between the system and the surroundings ($dQ = 0$ and $dL = 0$). Then, the equation of the first law of thermodynamics (2.15a)

$$Q_{12} = (U_2 - U_1) + L_{12},$$

acquires the following form:

$$U_2 - U_1 = 0$$

or

$$U_2 = U_1, \tag{2.32}$$

i.e. the experiment did not result in a change in the internal energy of the system involved. Since internal energy possesses the property of additivity, the internal energy of the system considered is the sum of the internal energies of the gas in the two vessels, of the walls of the vessels, of the water filling the thermostat and of the walls of the latter. Since $t_1 = t_2$, and the volume of the walls of the vessels, water and of the walls of the thermostat did not change in the course of the experiment, it is clear that the internal energy of these components of the system under consideration did not change as a result of the experiment. Based on this, with account taken of formula (2.32), we come to the conclusion that the internal energy of the ideal gas investigated (denote it by U^g) did not change as a result of the experiment:

$$U_1^g = U_2^g.$$

As to the volume occupied by the gas, it changed substantially in the course of the experiment: if before the experiment the entire gas was contained in the volume of one vessel *2*, after the experiment was terminated the gas filled the volumes of the two vessels (*2* and *3*). Since the temperature of the water after the test proved to be equal to that before the test was initiated and the internal energy underwent no change in the experiment, it follows that **the internal energy of an ideal gas is independent of volume:**

$$\left(\frac{\partial U}{\partial V}\right)_T = 0, \tag{2.33}$$

or, which is the same,

$$\left(\frac{\partial u}{\partial v}\right)_T = 0. \tag{2.34}$$

This conclusion, known as *Joule's law*, is of paramount importance. It reveals a new property of an ideal gas which does not follow from its other properties, previously stated.

Since the pressure of the gas also changed in the experiment and its temperature and internal energy remained constant, together with relationships (2.33) and (2.34), for an ideal gas we can write the following equations:

$$\left(\frac{\partial U}{\partial p}\right)_T = 0, \tag{2.35}$$

$$\left(\frac{\partial u}{\partial p}\right)_T = 0. \tag{2.36}$$

It should be noted that Eq. (2.35) contains no new data on the properties of an ideal gas; it can be derived from relationship (2.33) with the aid of the differential equations of thermodynamics (see Chapter 4).

With account taken of Eq. (2.34), the following equation can be derived for an ideal gas from Eq. (2.29a):

$$du = c_v\, dT. \tag{2.37}$$

The internal energy of an ideal gas depends only on temperature.

As to real gases, the internal energy depends not only on temperature, but also on volume. This, in particular, is evidenced by the results of the tests conducted with the aid of the outfit described above: when pressure p_1 of the gas in vessel *2* is considerable to an extent that the gas can no more be considered to be an ideal gas, the temperature of the gas t_2 after the test was over differed from the temperature t_1, i.e. t_2 was less than t_1. Hence, for a real gas

$$\left(\frac{\partial u}{\partial v}\right)_T \neq 0. \tag{2.38}$$

2.5 Enthalpy

As it will be seen below, of paramount importance to various thermodynamic calculations is the sum of the internal energy of a system U and the product of the systems pressure p by the volume of the system V; this quantity is called *enthalpy* and is denoted by I:

$$I = U + pV \tag{2.39}$$

(previously, this thermodynamic quantity was referred to as heat content).

It is clear that similar to internal energy enthalpy is an extensive property of substance:

$$I = iG, \tag{2.40}$$

where i is the *specific enthalpy* (per a unit mass of substance).

For the specific enthalpy we can write

$$i = u + pv. \tag{2.41}$$

Denoting the number of moles of a substance in a system by M,

$$i_\mu = \frac{I}{M},$$

where i_μ is the *molar enthalpy*, and

$$I = i_\mu M. \tag{2.42}$$

Enthalpy is measured in the units used to measure heat, work and internal energy (see Table 2.1).

Since i and u are related unambiguously, the reference point for enthalpy is linked with the reference point for internal energy: at the point, assumed as a reference for internal energy ($u = 0$), enthalpy will be equal to $i = pv$. So, at the above-mentioned zero reference point for the internal energy of water ($t = 0.01$ °C, $p = 610.8$ Pa, $v = 0.001\,0002$ m³/kg) the enthalpy is equal to $i = pv = 610.8 \times 0.001\,0002 = 0.611$ J (0.000 146 kcal/kg).

Inasmuch as the new function, enthalpy, is made up of quantities which are functions of state (u, p, v), enthalpy is also a function of state. Just as internal energy, the enthalpy of a pure substance can be represented as a function of any two properties, or parameters, of state, for instance, of pressure p and temperature T:

$$i = f(p, T).$$

Further, as enthalpy is a function of state, its differential is a total differential:

$$di = \left(\frac{\partial i}{\partial T}\right)_p dT + \left(\frac{\partial i}{\partial p}\right)_T dp. \tag{2.43}$$

The mathematical formulation of the first law of thermodynamics for the case where the only kind of work is that of expansion,

$$dq = du + p\,dv$$

with account taken of the obvious relationship*

$$p\,dv = d(pv) - v\,dp$$

takes the following form:

$$dq = du + d(pv) - v\,dp,$$

or, which is the same,

$$dq = d(u + pv) - v\,dp,$$

i.e.

$$dq = di - v\,dp. \tag{2.44}$$

It follows from Eq. (2.41) that if the pressure of a system is maintained constant, i.e. an isobaric process is being realized ($dp = 0$), then

$$dq_p = di, \tag{2.45}$$

---

* A transformation of the type

$$x\,dy = d(xy) - y\,dx,$$

known in mathematics as the Legendre transformation, will be repeatedly used below in the text.

i.e. the heat added to a system undergoing an isobaric process is only expended to change the enthalpy of the system. From this it follows that the expression for the isobaric heat capacity c_p, which in accordance with Eq. (1.69) is equal to

$$c_p = \frac{dq_p}{dt}$$

can be presented in the following form:

$$c_p = \left(\frac{\partial i}{\partial T}\right)_p. \tag{2.46}$$

It is clear from Eq. (2.46) that the constant-pressure heat capacity c_p characterises the rate of increase in enthalpy with rising temperature.

With account taken of (2.46), Eq. (2.43), representing the total differential of enthalpy, takes the following form:

$$di = c_p\, dT + \left(\frac{\partial i}{\partial p}\right)_T dp. \tag{2.47}$$

The partial derivative $(\partial i/\partial p)_T$ characterises the dependence of enthalpy on pressure.

Using condition (2.34), we can show that for an ideal gas

$$\left(\frac{\partial i}{\partial p}\right)_T = 0, \tag{2.48}$$

i.e. the enthalpy of an ideal gas does not depend on pressure.

By analogy, it can then be easily shown that

$$\left(\frac{\partial i}{\partial v}\right)_T = 0. \tag{2.49}$$

Relationships similar to (2.48) and (2.49) can be naturally written for a system as a whole:

$$\left(\frac{\partial I}{\partial p}\right)_T = 0 \tag{2.50}$$

and

$$\left(\frac{\partial I}{\partial V}\right)_T = 0. \tag{2.52}$$

It follows from relationships (2.50) and (2.51) that the enthalpy of an ideal gas, just like its internal energy, only depends on temperature: with account taken of Eq. (2.48), it follows from Eq. (2.47) that

$$di = c_p\, dT. \tag{2.52}$$

In thermodynamics, internal energy, enthalpy and heat capacity are referred to as the *calorific properties* of substance*, and the specific volume, pressure and temperature, are known as the *thermal properties* of substance.

Previously, in Chapter 1, we introduced the concept of the equation of state of substance, interrelating any three properties of a pure substance, i.e. representing one of the properties as a function of the other two.

The equation of state, relating two thermal properties of substance, is called the *thermal equation of state*, and the equation of state, which interrelates the three variables of which at least one is a calorific property, is refer-

* As it will be shown below, there are also other calorific properties.

red to as the *calorific equation of state*. It is clear, that functional dependences of the kind $i = f(p, T)$, $u = \varphi(v, T)$, etc. can be regarded as *calorific equations of state*. It will be recalled that the equations of state are strictly individual for each substance.

Since, as it was shown above, the internal energy and the enthalpy of an ideal gas only depend on temperature, it is clear that when applied to an ideal gas, the partial derivatives in the relationships

$$c_v = \left(\frac{\partial u}{\partial T}\right)_v \tag{2.31}$$

and

$$c_p = \left(\frac{\partial i}{\partial T}\right)_p \tag{2.46}$$

should be replaced by the total derivatives

$$c_v = \frac{du}{dT} \tag{2.31a}$$

and

$$c_p = \frac{di}{dT}. \tag{2.46a}$$

From this it follows that for an ideal gas, c_v and c_p, just as u and i, depend only on temperature.

Let us consider now relationship (2.41)

$$i = u + pv$$

applying it to an ideal gas. Differentiating this relationship with respect to temperature, we obtain:

$$\frac{di}{dT} = \frac{du}{dT} + \frac{d(pv)}{dT}. \tag{2.53}$$

From Clapeyron's equation

$$pv = RT$$

it follows that

$$\frac{d(pv)}{dT} = R.$$

With account taken of this relationship and also of Eqs. (2.31a) and (2.46a), we find from Eq. (2.53) that for an ideal gas

$$c_p - c_v = R \tag{2.54}$$

which is referred to as *Mayer's relation*.

Making use of this relation, J. R. Mayer as far back as 1842, before Joule's work appeared, attempted to calculate the mechanical equivalent of heat. Having found the magnitude of $c_p - c_v$ expressed in units of kcal/(kg-K) by measuring the heat capacities of gases at low pressures, and having calculated R in kgf-m/(kg-K) from Clapeyron's equation

$$R = \frac{pv}{T},$$

Mayer equated the two quantities and, proceeding in this way, calculated the mechanical equivalent of heat. The numerical value of J found by Mayer was not very accurate due to the low accuracy of the experimental values of the heat capacities of the gases, c_p and c_v.

2.6 Mathematical statement of the first law of thermodynamics for processes of flow

Up till now we were considering only systems in which the substance did not move (as a whole) in space. It should be stressed, however, that the first law of thermodynamics is of a general nature and is true for any system, both fixed and moving.

Let us consider the flow of a liquid or gas in a conduit of arbitrary form. In considering the flow, one more factor should be taken into account, the

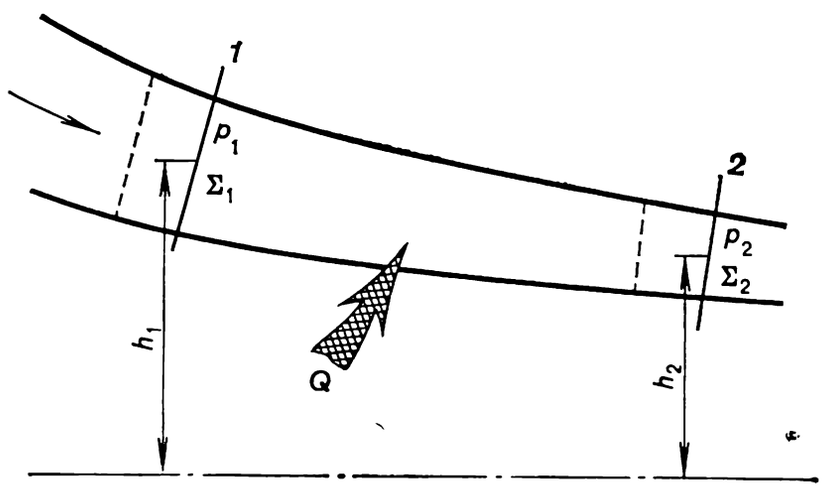

Fig. 2.6

kinetic energy of flow

$$E_{\text{kin}} = \frac{Gw^2}{2}, \tag{2.55}$$

where G is the mass of some fixed quantity of substance in the flow, and w is the flow velocity.

If the velocity of flow changes along the conduit between two sections (let us denote them *1* and *2*, Fig. 2.6), the kinetic energy of the flow changes by

$$\Delta E_{\text{kin}} = G\left(\frac{w_2^2}{2} - \frac{w_1^2}{2}\right). \tag{2.56}$$

Let us consider the equation of the first law of thermodynamics (2.15a):

$$Q_{12} = (U_2 - U_1) + L_{12}.$$

Here the subscripts "1" and "2" are referred to the two sections of the flow (Fig. 2.6). Let us analyze the components of the quantity L_{12}, present in this equation, as applied to the flow; for this purpose let us investigate what kinds of work are performed by the flow of gas (or liquid).

So, consider the flow in a conduit of arbitrary form (Fig. 2.6). A certain amount of heat Q_{12} can be added to the flow between the sections *1* and *2*.

Denote the cross-sectional area *1* of the conduit by Σ_1, and that of section *2* by Σ_2. The pressures under which the substance flows through the sections *1* and *2* are denoted, respectively, by p_1 and p_2.

The amount of substance passing through a section of the conduit per unit time (the mass flow rate) denote by G. It does not matter which of the

two sections are chosen to measure the mass flow rate G; in accordance with the principle of continuity of flow, known from hydraulics, the mass flow rate of stationary flow is the same for any section of the conduit involved (G = const).

Let us determine the work performed by the flow.

In order to introduce a portion of the gas or liquid of mass G into the considered length of the conduit, through section *1* per unit time, it is necessary to spend a certain amount of work to displace a similar portion of the gas from the considered length of the passage, freeing, thereby, the space for the newly introduced portion of gas. Let us denote by x_1 the path covered by the portion of gas considered per unit time, as it passes through section Σ_1. For the sake of clarity, the section of this portion of gas can be visualized as moved by a piston without friction (inasmuch as in the general case the section of the conduit is variable, the fictitious piston should be of a variable cross-section; this assumption in no way effects the results obtained). In order to displace the piston by a distance x_1, an amount of work must be performed equal to the product of the force acting upon the piston (this force is equal to the product of gas pressure p_1 by the cross-sectional area of the piston Σ_1) by the length of piston travel per unit time:

$$L_{(1)} = p_1 \Sigma_1 x_1.$$

Denote

$$V_1 = x_1 \Sigma_1,$$

where V_1 is the volume of the gas passing into the part of the conduit considered per unit time. It is clear that

$$V_1 = v_1 G,$$

where G is the mass flow rate through passage, and v_1 the specific volume of gas in section *1*.

Thus,

$$L_{(1)} = -p_1 v_1 G. \tag{2.57}$$

It should be noted that $L_{(1)}$ is the work done on the flow and, therefore, the quantity $L_{(1)}$ is negative [the "minus" in (2.57)].

The work done by the piston moving through section *2* is calculated in a similar manner

$$L_{(2)} = p_2 V_2.$$

In accordance with the principle of continuity of flow formulated above, the mass rate of gas flow through section *2* is the same as through section *1*; therefore,

$$V_2 = v_2 G$$

and

$$L_{(2)} = p_2 v_2 G. \tag{2.58}$$

where $L_{(2)}$ is the work performed by the flow (piston *2*) emerging from section *2*. Consequently, this work is assumed to be positive.

It follows from Eqs. (2.57) and (2.58) that as the gas flows in a conduit from the arbitrarily chosen section *1* to section *2* at a mass flow rate equal to G, the work performed per unit time is equal to the algebraic sum of the work $L_{(2)}$ *done by* piston *2*, and the work $L_{(1)}$ *done on* piston *1* (this work is

called the *work of displacement* or *transport work*),

$$L_{dis} = L_{(1)} + L_{(2)},$$

whence, in accordance with (2.57) and (2.58), we have

$$L_{dis} = (p_2 v_2 - p_1 v_1) G. \tag{2.59}$$

The work of displacement is the first component of the work done by the flow.

Further, if the flow velocity in section *2*, w_2, differs from the flow velocity in section *1*, w_1, then to change the kinetic energy of the flow, determined by Eq. (2.56), energy must be added (or removed):

$$\Delta E_{kin} = G\left(\frac{w_2^2}{2} - \frac{w_1^2}{2}\right).$$

This is the second component of the work performed by the flow.

If the sections *1* and *2* are arranged at a different height (h_1 and h_2, respectively), work must be expended to elevate the considered portion of the gas from height h_1 to height h_2. This work is equal to the change in the potential energy of the portion of gas of mass G; in accordance with Eq. (2.12),

$$L_{pot} = Gg(h_2 - h_1).$$

This is the third component of the work done by the flow.

In the general case the flow is also capable of performing other kinds of work as it passes from section *1* to section *2* of the conduit, for instance, rotate the wheel of a turbine or, if the flow of a conducting liquid in a cross magnetic field is involved, deliver electric power into an external circuit due to the magnetohydrodynamic effect, etc. All these kinds of work, referred to as mechanical work, we denote by L_{mech}. Mechanical work can not only be removed from a flow but also added to it: a flow can be delivered by a centrifugal pump, or handled by an electromagnetic pump, etc.

The mechanical work is the fourth component of the work performed by the flow.

Finally, the fifth component of the work of flow is the work spent to overcome skin friction between the flow and the walls of the conduit. Denote this kind of work by L_{fr}.

It follows that the work accomplished by a flow of gas (fluid or liquid) can be expressed in the general case by the following formula:

$$L_{12} = G(p_2 v_2 - p_1 v_1) + G\left(\frac{w_2^2}{2} - \frac{w_1^2}{2}\right) + Gg(h_2 - h_1) + L_{mech} + L_{fr}. \tag{2.60}$$

Substituting the relationship for L_{12} in the equation of the first law of thermodynamics (2.15a), we get:

$$Q_{12} = (U_2 - U_1) + G(p_2 v_2 - p_1 v_1) + G\left(\frac{w_2^2}{2} - \frac{w_1^2}{2}\right) + \\ + Gg(h_2 - h_1) + L_{mech} + L_{fr}. \tag{2.61}$$

Dividing both sides of Eq. (2.61) by G, we obtain a similar relationship for a unit mass of flow (i.e. expressed in specific quantities):

$$q_{12} = (u_2 - u_1) + (p_2 v_2 - p_1 v_1) + \left(\frac{w_2^2}{2} - \frac{w_1^2}{2}\right) + g(h_2 - h_1) + l_{mech} + l_{fr}. \tag{2.62}$$

In the differential form this equation becomes

$$dq = du + d(pv) + w\,dw + g\,dh + dl_{\text{mech}} + dl_{\text{fr}}. \tag{2.63}$$

Taking into account that

$$i = u + pv,$$

we get:

$$q_{12} = (i_2 - i_1) + \left(\frac{w_2^2}{2} - \frac{w_1^2}{2}\right) + g(h_2 - h_1) + l_{\text{mech}} + l_{\text{fr}} \tag{2.64}$$

and

$$dq = di + w\,dw + g\,dh + dl_{\text{mech}} + dl_{\text{fr}}. \tag{2.65}$$

Equations (2.64) and (2.65) are the mathematical formulation of the first law of thermodynamics for a flow process.

Let us compare now the differential equation of the first law of thermodynamics, written in the most general form for an arbitrary system, with the private case of this equation for a flow process. The first of these equations, Eq. (2.23), is

$$dq = du + p\,dv,$$

and the second, Eq. (2.63),

$$dq = du + d(pv) + w\,dw + g\,dh + dl_{\text{mech}} + dl_{\text{fr}}.$$

It should be borne in mind that Eq. (2.23) is written for the case when the only kind of work performed is expansion work. In this connection it should be stressed that the mechanical work accomplished by the flow, l_{mech} should not be confused with the work l^*, present in Eq. (2.21), performed by the system on other, apart from pressure, generalized forces; when the velocity of flow is equal to zero, no mechanical work is performed, while the magnitude of l^* does not depend on the velocity of the system (for instance, the work spent to overcome the resistance of surface tension while the surface is increasing).

It should be also stressed that in the case of frictional flow the work of the flow spent to overcome friction turns fully into heat transferred to the flow. Therefore, for the case of frictional flow, the quantity q in the left-hand side of Eqs. (2.23) and (2.63), represents the sum of the heat added to the flow from an outside source (denoted by q_{ext}) and the frictional heat q_{fr}:

$$q = q_{\text{ext}} + q_{\text{fr}}. \tag{2.66}$$

Equations (2.23) and (2.63) can be then presented as follows:

$$dq_{\text{ext}} + dq_{\text{fr}} = du + p\,dv; \tag{2.67}$$

$$dq_{\text{ext}} + dq_{\text{fr}} = du + d(pv) + w\,dw + g\,dh + dl_{\text{mech}} + dl_{\text{fr}}. \tag{2.68}$$

As regards Eq. (2.68), inasmuch as

$$dq_{\text{fr}} = dl_{\text{fr}},$$

the quantities dq_{fr} and dl_{fr} in this equation cancel out and the equation takes the following form:

$$dq_{\text{ext}} = du + d(pv) + w\,dw + g\,dh + dl_{\text{mech}} \tag{2.68a}$$

or, which is the same,

$$dq_{\text{ext}} = di + w\,dw + g\,dh + dl_{\text{mech}}, \tag{2.68b}$$

but in Eq. (2.67) dq_{fr} is not cancelled out, since it is only one of the components of expansion work $p\,dv$.

In principle, Eqs. (2.23) and (2.63) are identical. They express analytically the first law of thermodynamics. For this reason the right-hand sides of these equations can be equated. Then,

$$p\,dv = d\,(pv) + w\,dw + g\,dh + dl_{mech} + dl_{fr}. \tag{2.69}$$

Equation (2.69) shows that the work spent to displace the flow, $d\,(pv)$, to change its kinetic energy, $w\,dw$, to change the potential energy of the flow, $g\,dh$, to overcome the resistance to flow offered by frictional forces, dl_{fr}, and the mechanical work, d_{mech}, are performed at the expense of the work of expansion done by the gas (or liquid) in the flow, i.e. $p\,dv$. For if a flowing gas expands (i.e. if its specific volume increases), work must be accomplished, involved in the increase of v; the differential of this work is always equal to the product $p\,dv$.

Inasmuch as

$$d\,(pv) = p\,dv + v\,dp,$$

it follows from Eq. (2.69) that for any flow the following is always true:

$$w\,dw = -v\,dp - g\,dh - dl_{mech} - dl_{fr}. \tag{2.70}$$

For the case where the flow does not perform any mechanical work ($dl_{mech} = 0$), we obtain

$$w\,dw = -v\,dp - g\,dh - dl_{fr}. \tag{2.71}$$

When $dh = 0$, from equation (2.71) it follows that

$$w\,dw = -v\,dp - dl_{fr}. \tag{2.72}$$

Finally, for the case of frictionless flow

$$w\,dw = -v\,dp. \tag{2.73}$$

These important relationships will be used in Chapter 8.

3

The second law of thermodynamics

3.1 Cycles. Concept of thermal efficiency. Heat sources

In Chapter 2 it was shown that in the process of expansion a gas performs work expended to overcome the forces of external pressure. In accordance with Eq. (2.5a), the work performed by a gas undergoing expansion from pressure p_1 to pressure p_2 is equal to

$$L_{12}^{\text{exp}} = \int_{V_1}^{V_2} p\, dV \tag{3.1}$$

where V_1 and V_2 are the volumes of the gas at the beginning and end of the process of expansion.

For this process of expansion to be repeated and to obtain the work L_{12}^{exp} again, the gas must be returned into its initial state *1*, characterized by the properties p_1 and V_1, i.e. the gas must be compressed. The gas undergoes then a *cyclic process* or a *cycle*.

To compress a gas, naturally, work must be expended and this work is transferred to the gas from some external source. In accordance with the general definition, this work is

$$L_{21}^{\text{com}} = \int_{V_2}^{V_1} p\, dV, \tag{3.2}$$

or, which is the same

$$L_{21}^{\text{com}} = -\int_{V_1}^{V_2} p\, dV. \tag{3.3}$$

The similarity between the expressions for the work of expansion and compression is illusory: the work depends on the path followed by the process between the same points *1* and *2*.

It is then clear that the compression of a gas from pressure p_2 to pressure p_1 should be carried out, following a path different from the path of expansion. Otherwise, the work of expansion will be equal to the work of compression, and the total work obtained as the gas undergoes a cyclic process (or simply a cycle) will be equal to zero. The work expended by a system per one cycle (we shall refer to it as the work output of a cycle) is equal to the difference (algebraic sum) between the work of expansion and the work of compression. It is clear that the path of compression should be selected so that the absolu-

Fig. 3.

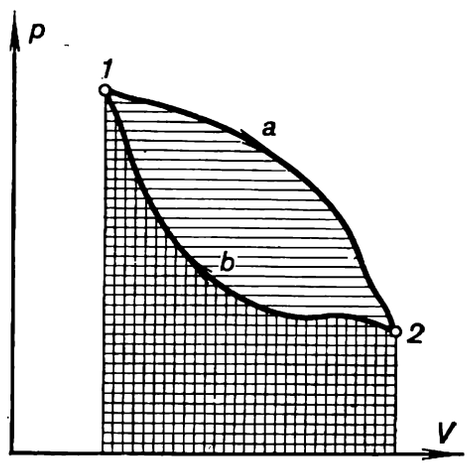

te value of the compression work is somewhat less than the work of expansion, otherwise the work output of the cycle will be negative, i.e. no work will result from the cycle but only spent, though, as it will be shown below, in certain cases the cycle is organized in exactly this way (refrigeration cycles).

Cycles which result in an output of work are realized in various heat engines. By a *heat engine* is meant a continuous acting system operating in a cycle and converting heat into work. The substance used to obtain work in a cycle by changing its state is called the *working medium* (or fluid).

The work output of a cycle is conveniently interpreted in a p-V diagram, as illustrated in Fig. 3.1. If *1-a-2* is the path of the process of expansion and *2-b-1* the path of the process of compression, then the area bounded by the curve *1-a-2* is equivalent to expansion work, and the area below the curve *2-b-1*, to the work of compression, while the area confined within the closed curve (path of cycle) *1-a-2-b-1* represents the work output of the cycle. It is clear from this state diagram that for the work output of a cycle to be positive, the path of the process of compression must be located on the p-V diagram below the path of expansion. Let us integrate the differential equation of the first law of thermodynamics

$$dQ = dU + dL \tag{3.4}$$

for an arbitrary cycle realized by a working medium:

$$\oint dQ = \oint dU + \oint dL. \tag{3.5}$$

It will be recalled that Q is the amount of heat added to the system from the outside (or removed from it), and L denotes work done by the system (or done on the system). Inasmuch as internal energy U is a function of state and, consequently, its integral along a closed path is equal to zero (i.e. as the working medium returns into its initial state upon completion of the cycle, the internal energy of the working medium acquires its initial magnitude), we obtain

$$\oint dQ = \oint dL \tag{3.6}$$

Denoting

$$L_c = \oint dL$$

and

$$Q_c = \oint dQ,$$

we can present relationship (3.6) in the following form:

$$Q_c = L_c, \tag{3.7}$$

i.e. the work output of a cycle, L_c, is equal to the amount of heat added to the working medium from an outside source. In accordance with the first law of thermodynamics, Eq. (3.7) indicates that the work produced by an engine is equal to the amount of heat removed from an external source and added to the working medium of the engine. If it were possible to construct a heat engine in which the amount of work produced would be greater than the amount of heat added to the working medium from an external source, it would mean that the first law of thermodynamics (the law of conservation and conversion of energy) is invalid. From this it would follow that it is possible to construct a heat engine in which work would be accomplished without any addition of heat from the outside i.e. a perpetual motion machine.* The first law of thermodynamics, therefore, can be formulated as follows:

A perpetual motion machine of the first kind is impossible.

As regards the heat Q_c that is converted into work, it should be noted that in some parts of a cycle heat is added to the working medium and removed from it in other parts. As it will be shown below, the removal of a definite amount of heat from the working medium in some parts of a cycle is obligatory for the realization of the cycle of any heat engine.

Denoting the amount of heat added to the working medium in a cycle by Q_1 and the amount of heat removed from the working medium in a cycle by Q_2, we come to an obvious result:

$$Q_c = Q_1 - Q_2 \tag{3.8}$$

and, in accordance with Eq. (3.7),

$$L_c = Q_1 - Q_2. \tag{3.9}$$

Let us introduce a new concept of the so-called *thermal efficiency of a cycle*, by which is meant the ratio of the work output of a cycle to the amount

* A perpetual motion machine of the type considered is called a *perpetual motion machine of the first kind*, as distinguished from another type of perpetual motion machine, which shall be examined below.

of heat added to the working medium during the cycle. Denoting the thermal efficiency of a cycle by η, in accordance with the definition given above, we obtain:

$$\eta = \frac{L_c}{Q_1}, \tag{3.10}$$

or, which is the same,

$$\eta = \frac{Q_1 - Q_2}{Q_1}. \tag{3.11}$$

Accordingly, for 1 kg of the working medium,

$$\eta = \frac{l_c}{q_1} \tag{3.12}$$

Fig. 3.2

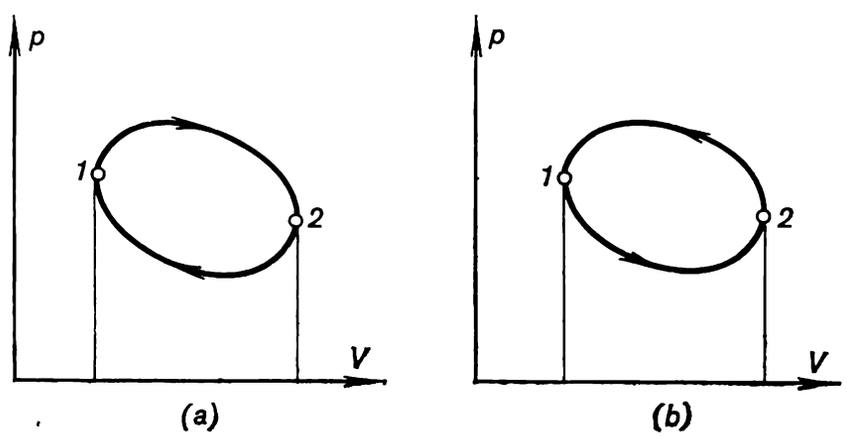

or

$$\eta = \frac{q_1 - q_2}{q_1}, \tag{3.13}$$

where l and q represent the work and heat per 1 kg of the working medium.

The thermal efficiency of a cycle characterizes the degree of perfection of the cycle analyzed: the higher the thermal efficiency, the more perfect is the cycle. With an equal amount of heat Q_1 added to the working medium, more work L_c is done in the cycle whose thermal efficiency is higher.

When considering processes involving the addition and rejection of heat in a cycle, a question naturally arises: Where does the heat Q_1 added in the cycle come from and where is the heat Q_2 rejected from the working medium taken to? In this connection let us introduce the concept of heat sources. The system from which the heat Q_1, added to the working medium, is removed will be referred to as the high-temperature source, and the system to which the heat Q_2, rejected from the working medium, is transferred, as the low-temperature source, or heat sink. For the sake of convenience, it will be assumed below that the total heat capacity of the high- and low-temperature sources is so great that the removal of heat Q_1 from the high-temperature source and the transfer of heat Q_2 to the low-temperature source does not result in any appreciable change in the temperatures of the two heat sources.

A detailed analysis of the thermodynamic regularities governing the performance of work during the cycles developing in heat engines will be made in the following chapters.

So far, in this section we have been considering cycles on the p-V diagram in which the path of the process of expansion runs higher than the path representing the process of compression, i.e. cycles where work is done and then transferred to an external consumer (Fig. 3.2a). Such cycles are called forward, or direct, cycles. As it was shown above, in a forward cycle an amount of heat Q_1 is removed from the high-temperature source and an amount of heat Q_2 is added to the low-temperature source, and the difference between these two, $Q_1 - Q_2$, is converted into work $L_c = Q_1 - Q_2$.

But if a cycle is realized in a way such that the path of the process of compression is arranged higher than the line representing the process of expansion (Fig. 3.2b), then, inasmuch as the work of compression happens now to be greater than the work of expansion, for such a cycle to be accomplished work must be transferred from some external source of work (the magnitude of this work, of course, is equal to the area between the paths of expansion and compression in the p-V diagram). A reverse cycle results in the removal of heat from the low-temperature source and addition of this heat to the high-temperature source. Denoting, by analogy with the forward cycle, the heat removed from the low-temperature source by Q_2 and the heat added to the high-temperature source by Q_1, it is clear that $Q_1 = Q_2 + L_c$. The heat Q_1 transferred to the high-temperature source during the reverse cycle is equal to the sum of the heat removed from the low-temperature source, Q_2, and the heat equivalent to the amount of work added during the cycle, L_c. Thus a reverse cycle results in cooling the low-temperature source. The reverse cycle is the working cycle of a refrigerating unit (machine).

3.2 Reversible and irreversible processes

One of the most important notions of thermodynamics is the notion of *reversible* and *irreversible* processes.

A thermodynamic process is defined as a totality of continuously changing states of a thermodynamic system. Two processes can be imagined to develop along the same path between any two states *1* and *2* of a system: from state *1* to state *2* and vice versa, from state *2* to state *1*, the so-called forward and reverse processes.

A process is said to be *reversible* if after the process has been completed in the forward and reverse directions, the system returns into its initial state. Thus, the totality of the forward and reverse processes causes no changes in the surrounding medium.

Let us consider, for instance, two planes A and B with a ball placed at point *1* on one of the planes (Fig. 3.3). As the ball moves downward, it acquires kinetic energy at the expense of potential energy. At point *3* the ball possesses a certain amount of kinetic energy, making it possible for the ball to rise to the other plane; its kinetic energy diminishes, but this is compensated for by an increase in the potential energy. If there is no friction between the ball and the surface over which it moves and the surrounding air offers no resistance to the motion of the ball, in accordance with laws of mechanics the ball shall rise to the same height from which its downward movement on plane A was initiated, i.e. points *1* and *2* are arranged at the same height h above the horizon. The ball will cease to rise at point *2*, its velocity will become equal to zero and the ball will begin to roll down, then rise to point *1*, etc. Under the conditions specified above (absence of surface friction and resistance of air to motion) the considered process is reversible.

For reversible processes, the reverse process is, so to say, a "mirror-image presentation" of the direct process. If, for instance, in a forward process a

certain amount of heat is added to a system, in the reverse process an exactly equal amount of heat is rejected from the system; if a system performs work in a forward process on the surrounding medium, then during the reverse process the surrounding medium does work on the system, the absolute amount of this work being equal to the work done during the forward process. If a system undergoes expansion during a forward process, compression of the system will take place during the reverse process, etc.

A process is said to be *irreversible* if after the process has been completed in the forward and reverse orders, the system fails to return into the initial state. It is a matter of general experience that all natural spontaneous processes are irreversible, and no natural reversible processes exist.

Let us consider some examples of irreversible processes.

A typical example of an irreversible process, accompanying many natural processes, is the above-mentioned process of friction. The work expended to overcome friction turns irreversibly into the heat, which is liberated in the course of friction.

Fig. 3.3

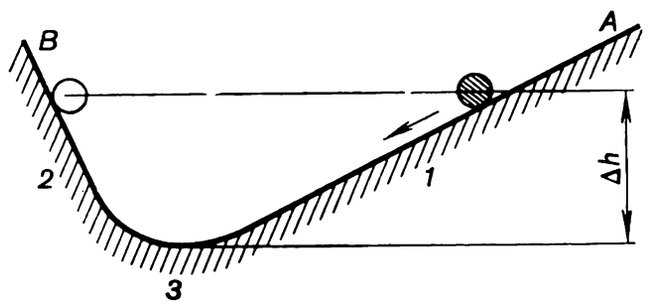

The presence of friction always results in the absolute value of the work output of a system undergoing a direct process being smaller than the work transferred into the system from the outside during the reverse process. This, for instance, explains the fact that in reality the ball, moving from one inclined plane to the other and back, rises each time to a smaller height, until it comes to a standstill at the bottommost point. To overcome friction and the resistance offered by the surrounding medium an irreversible expenditure of energy takes place, and the process develops spontaneously in one direction, until the system comes into the state of rest.

The process occurring in a wound up clock also develops in one direction, the spring unwinds (or the weight falls) and the pointers move. Naturally, the clock will not wind up by itself, without the transfer of work from the outside.

The expansion of a gas into an evacuated space, considered above in Sec. 2.4 (the Gay-Lussac—Joule experiment), is also a typically irreversible process. It is clear that the gas, occupying volume V_1 before expansion and filling the volume V_2 after expansion, will not be compressed without the expenditure of work from the outside, and will not accumulate again in volume V_1, freeing volume V_2.

The thing that makes any mechanical processes irreversible is friction. As was already mentioned, in the absence of friction any mechanical process is reversible. For this process to be accomplished in the reverse order, it is

sufficient to change the signs of the velocities of all the components of the system.

The process involved in making any solution or mixture is also irreversible. If alcohol is mixed with water, for instance, the components of the resulting solution will not separate by themselves.

The flow of electric current in a conductor is accompanied by irreversible losses, which are Joule's losses of power to overcome the resistance of the conductor; these losses result in that electric power turns into heat. The magnitude of these losses, similar to the losses in mechanical processes due to friction, is independent of the direction in which the current flows in a conductor.

The irreversible process which is often encountered in practice consists in the flow of heat from a body with a higher temperature to a body with a lower temperature. The century-old experience of mankind shows that heat will not flow spontaneously from a body at a higher temperature to a body at a lower temperature without the expenditure of external work.

It should be noted that the degree of irreversibility of this or another process can be different. For instance, work shall be expended to overcome the frictional forces both when a polished body moves over a polished surface and when a body moves over a rough surface, but the magnitude of the work converted into frictional heat is greater in the second case than in the first. Below, in this chapter, an objective criterion will be introduced, enabling a qualitative estimation of the degree of irreversibility of various real processes.

Each of the irreversible processes considered above can be realized in the reverse direction, returning the system into its initial state. But for such a reversible process to be accomplished, the surroundings must undergo a compensating process (involving the expenditure of heat or work).

So, in the example with the ball rolling from an inclined surface, the ball can also be lifted to point *2* in the presence of friction, but to make this possible it is necessary to spend work equal to the decrease in the energy of the ball, due to friction. This work must be transferred from some external source. The gas expanding in the Gay-Lussac — Joule experiment can again be returned into vessel *1* if, for instance, a vacuum pump is employed for the purpose. However, work will be expended to drive this pump. The components of the aqueous alcohol solution considered above can be separated by means of rectification, but this involves the expenditure of a certain amount of heat. And, finally, heat can be transferred from a body at a lower temperature to a body at a higher temperature (this is carried out with the aid of the above-mentioned reverse cycle of the heat engine used in refrigerating plants), but this process is feasible provided a certain amount of work is expended.

It should be noted, however, that an irreversible process cannot be reversed completely. A system is returned into its initial state at the expense of irreversible changes in the surroundings.

It must be stressed that any spontaneous (and, consequently, irreversible) process occurring in a system goes on until equilibrium sets in the system.

Practice shows that after a system reaches equilibrium it remains in this state, i.e. the system is incapable of a spontaneous change in state, which complies with the previously formulated statement that energy spontaneous process is irreversible.*

---

* It is understood that we are speaking about macroscopic changes of state and not about microscopic fluctuations of some thermodynamic quantities (this is discussed at greater length in Sec. 3.9).

It is important to visualize clearly that a system can be brought into a state of equilibrium by having the system to undergo both reversible and irreversible processes.

Based on the foregoing, it is easy to come to the conclusion that **a system is capable of producing work until it passes into a state of equilibrium.** In fact, it was noted above that any heat engine can perform work, provided there are at least two heat sources available, a high-temperature source and a low-temperature source (heat sink). If the temperatures of the high temperature source and sink become equal, i.e. if the system comprising the high-temperature source, the working medium or substance and the low-temperature source (heat sink) comes into thermal equilibrium, the transfer of heat terminates and no work will be done.

The examples considered above show that the absence of equilibrium in a system is evidenced by the presence in this system of a difference between some characteristic quantities; this may be either a temperature difference in various parts of the system, or a difference in electrical potentials, etc.

As was already mentioned above, the degree of irreversibility of an irreversible process may differ. In principle, the degree of irreversibility may be visualized as being so small that the process could be practically realized in a reversible way. In this connection it is helpful to turn to the concept of equilibrium (quasi-static) and non-equilibrium processes.

Any non-equilibrium process becomes an equilibrium one, if the rate at which the process is realized approaches zero. At the same time every non-equilibrium process is irreversible and every equilibrium process is a reversible one. In other words, the reason for the irreversibility of real processes consists in their being in a non-equilibrium state. Indeed, an infinitely slow (quasi-static) development of a process makes the process reversible. In an infinitely slow process the working medium passes through a continuous series of equilibrium states, which may be reproduced while the system undergoes the reverse process. Irreversible processes, which are the result of the finite rate at which they are realized, pass through the non-equilibrium states of the working medium, which states cannot be reproduced when the process is reversed. For instance, with a finite piston velocity, the layers of gas adjacent to the piston during expansion are at a pressure lower than the average pressure of the gas involved and during compression at a higher pressure. This process is internally irreversible. The internal reversibility results from the constancy of the parameters (properties) over the entire mass of the working medium, as distinguished from the external irreversibility which stems from the infinitely small difference between the temperature of the working medium and of the heat source, which makes possible a change in the direction of the heat flux during the reverse development of the process.

As was already mentioned repeatedly, heat flows from one body to another only when the two bodies are at different temperatures. Thus, the process of heat transfer is, essentially, a non-equilibrium irreversible process. But if the difference between the temperatures of the bodies is infinitely small, the degree of irreversibility is also infinitely small, i.e. the irreversible process of heat transfer happens to be as close as possible to a reversible process. It should be noted that if the difference between the temperatures of two bodies is infinitely small, the rate of heat transfer between them will also be infinitely small.

In spite of the fact that it is practically impossible to realize reversible processes, the concept of a reversible process proves to be very useful. The point is that, firstly, real processes may be close to reversible ones in some cases and, secondly, it is more convenient to consider the degree of irreversibility of a real process in respect to the hypothetically reversible process.

3.3 Statements of the second law of thermodynamics

As was already stated above, the first law of thermodynamics characterises quantitatively the processes of conversion of energy. The second law of thermodynamics characterises the qualitative side of these processes. The first law provides all that is necessary to compose the energy balance of a process. However, it gives no indications whether this or another process is feasible. Meanwhile, by far not all processes can be practically realized.

It should be stressed that the second law of thermodynamics, as well as the first, is based on experience.

In the most general form the second law of thermodynamics can be stated as follows:

Every actual spontaneous process is irreversible.

This sufficiently obvious conclusion was discussed in the preceding section. All other statements of the second law of thermodynamics are private cases of the most general statement.

In 1850 R. Clausius proposed the following statement of the second law of thermodynamics:

Heat cannot pass spontaneously from a body of lower temperature to a body of higher temperature.

W. Thomson (Lord Kelvin) in 1851 suggested the following statement:

It is impossible, by means of an inanimate material agency, to derive mechanical effect from any portion of matter by cooling it below the temperature of the coldest of the surrounding objects.

M. Planck suggested the following statement:

It is impossible to construct an engine, which, when working in a complete cycle, will produce no effect other than the raising of a weight and the cooling of a heat source.

By a machine operating in a cycle is meant an engine converting heat into work in a cyclic process. Indeed, if it were possible to construct a heat engine that would simply extract heat from some source and, operating in a cycle, convert the heat into work, this would violate the previously formulated statement that a system is capable of performing work only when this system is out of equilibrium (in particular, as applied to a heat engine, when there is a difference between the temperatures of the heat source and sink in the system).

If there were no restrictions imposed by the second law of thermodynamics, this would mean that it is possible to construct a heat engine with only a heat (high temperature) source. Such an engine could operate at the expense of cooling, for instance, water in the ocean. This process could continue until the entire internal energy of the ocean would be converted into work. A heat engine which would perform in this way was given the name of a *perpetual motion machine of the second kind* by Wilhelm

Ostwald (as distinguished from a perpetual motion machine of the first kind, operating against or violating the law of conservation of energy). In accordance with the foregoing, the statement of the second law of thermodynamics, suggested by Planck, can be modified to run as follows:

It is impossible to build a perpetual motion machine of the second kind.

It should be noted that the existence of a perpetual motion machine of the second kind does not violate the first law of thermodynamics; in fact, in this engine work would not be created from nothing, but at the expense of the internal energy of a heat source.

An important feature of heat processes should be emphasized. Mechanical work, electrical work, the work of magnetic forces, etc. can be fully converted into heat. But, as regards heat, only a fraction of it can be converted in a cyclic process into mechanical and other kinds of work; the other fraction of heat must inevitably be transferred to a low-temperature heat source (or sink).

3.4 The Carnot cycle. Carnot's theorem

In 1824 the French engineer S. Carnot published a paper which later provided the theoretical fundamentals of heat engines. In this work Carnot investigated the cycle of a heat engine (named after him later on) which is of paramount importance for thermodynamics.

The *Carnot cycle* is realized by a working medium between two heat sources, a high- and a low-temperature source, in the following way (Fig. 3.4). The working medium, whose properties at the initial point *1* of the cycle are temperature T_1, specific volume v_1 and pressure p_1, receives heat from the high-temperature source (whose temperature is designated by $T_{\text{h.t.}}$) with $T_{\text{h.t.}} > T_1$. The working medium (gas) expands, performing work (for instance, displaces a piston in a cylinder). The process of adding heat to the working medium can be visualized as occurring in a way that the temperature of the working medium remains constant (i.e. the decrease in the temperature of the expanding gas is compensated for by adding heat from the outside). In other words, an isothermal process is being affected, $T_1 = \text{const}$. After the gas expands to some state (point *2*), the addition of heat to the gas terminates and further expansion of the gas proceeds without heat addition, following an adiabatic line. In the course of the adiabatic expansion the temperature of the gas decreases, since no energy is added to the gas from the outside, and, consequently, work is done only at the expense of the internal energy of the gas.* After the gas reaches some state *3* (the temperature of the gas in this state will be denoted T_2), the process of expansion involving the performance of work terminates and the working medium returns into its initial state. The gas is compressed at the expense of work transferred from some external source, and heat is rejected from the gas while it

* For instance, for an ideal gas for which $du = c_v dT$, in the absence of heat exchange between the working medium and sources ($dq = 0$), it follows from the mathematical statement of the first law of thermodynamics that $dT = -p\, dv/c_v$, i.e. the temperature of the gas actually decreases during adiabatic expansion, and increases during the process of adiabatic compression. Adiabatic processes shall be considered in greater detail in Sec. 7.4. In Chapter 7 it will be shown, in particular, that on the p-v diagram the adiabatic line is steeper than the isothermal line.

undergoes compression, with the heat being transferred to a low-temperature source (heat sink) which is at a temperature $T_{l.t.} < T_2$. Heat is removed from the gas in a way that the temperature of the compressed gas remains constant, i.e. the gas undergoes isothermal compression along the isotherm T_2 = const. After the gas comes into the state at point *4*, lying on one adiabat with the initial point of the cycle *1*, the rejection of heat ceases. Further adiabatic compression of the gas takes place until the gas returns into point *1*. Thus, the Carnot cycle consists of two isothermal processes and two adiabatic processes. The work done by the gas during expansion is represented on the *p-v* diagram by the area under the line *1-2-3*; the work spent to compress the gas, by the area under line *3-4-1*; the useful work delivered to an outside consumer during the cycle is represented by area *1-2-3-4-1*.

Fig. 3.4

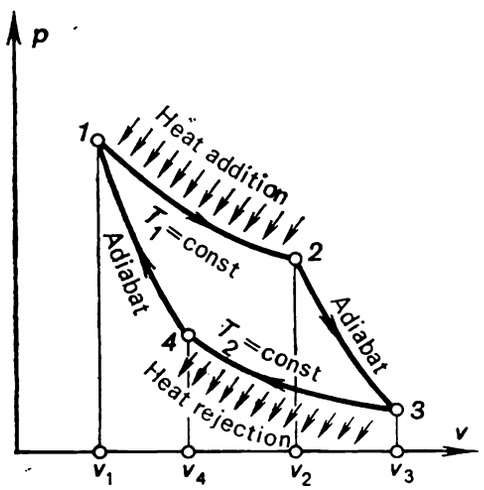

Fig. 3.5

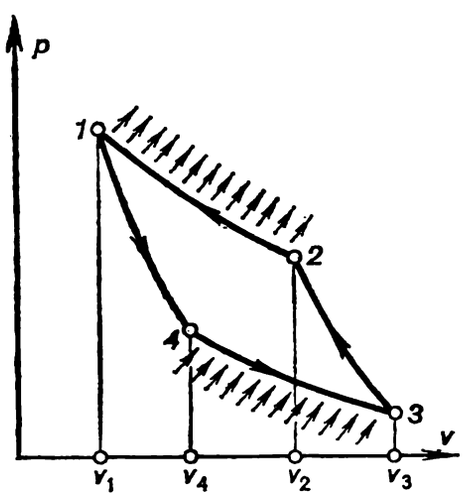

It will be recalled that the amount of heat added to the working medium from the high-temperature source is denoted by Q_1, and the amount of heat rejected from the working medium to the low-temperature source by Q_2.

Since heat is added from the high-temperature source to the working medium in the process *1-2* at a finite temperature difference $T_{h.t.} - T_1$, and heat is rejected from the working medium to the low-temperature source during the process *3-4* at a finite temperature difference $T_2 - T_{l.t.}$, these processes are irreversible. As was mentioned above, the irreversibility of processes can be reduced almost to zero if the difference between the temperatures of the working medium and the heat source is infinitely small:

$$T_1 = T_{h.t.} - dT, \tag{3.14}$$

$$T_2 = T_{l.t.} + dT. \tag{3.15}$$

Thus, in the isothermal process *1-2* the temperature of the gas is below the temperature of the high-temperature source by the infinitesimal dT, and during the isothermal process *3-4* the temperature of the gas exceeds the temperature of the low-temperature source (sink) by the infinitesimal value dT.

If this condition is satisfied and the gas expands during the process *2-3* and is compressed during the process *4-1* without friction, the considered cycle becomes reversible. Indeed, consider a Carnot cycle affected by the same working medium between the same heat sources in the reverse direc-

tion, as illustrated in Fig. 3.5. The compressed gas whose state is represented on the p-v diagram by point *1*, expands along the adiabat *1-4* performing work (displacing a piston). During adiabatic expansion the temperature of the gas decreases. After this the gas, undergoing adiabatic expansion, reaches point *4*, at which its temperature (denoted by T_{II}) is below the temperature of the low-temperature source by dT:

$$T_{II} = T_{l.t.} - dT, \tag{3.16}$$

and the adiabatic process terminates. Then, the gas undergoes isothermal expansion along the line *4-3* (T_{II} = const) and in the course of this process the gas removes heat from the low-temperature source. Further, at the expense of the work received from some external machine the gas is compressed adiabatically to the state corresponding to point *2*. During the process of adiabatic expansion the temperature of the gas rises. The state *2* is selected so that in this state the temperature of the gas (denoted by T_I) will be higher than the temperature of the high-temperature source by dT:

$$T_I = T_{h.t.} + dT \tag{3.17}$$

Further, the gas undergoes isothermal compression following the line T_I = const, and the heat released during compression is removed, or rejected, to the high-temperature source, resulting in that the gas returns to the initial point *1*. Comparing Eqs. (3.14) and (3.15) with Eqs. (3.16) and (3.17), we see that $T_1 = T_I$ and $T_2 = T_{II}$ accurate to infinitesimals, i.e., in a reverse cycle the state of the working medium changes in the same temperature interval as in the forward cycle. The work done by the expanding gas is represented by the area under the curve *1-4-3*, and compression work is equal to the area under curve *3-2-1*, and, consequently, the difference between expansion work and compression work is represented by the area *1-4-3-2-1*. Denote this difference in the two kinds of work by $-L_c$, the minus sign indicating that the work is transferred from an external source. The reverse cycle considered results in that an amount of heat Q_2 is removed from the low-temperature source and added to the high-temperature source. The high-temperature source also receives heat equivalent to the external work L_c. Thus, the high-temperature source receives a total amount of heat $Q_1 = Q_2 + L_c$. Since, as it was shown above, $T_1 = T_I$ and $T_2 = T_{II}$, the heat removed from the low-temperature source during the reverse cycle, Q_2, is equal to the amount of heat added to this source during the forward cycle. Accordingly, during the reverse cycle the amount of heat added to the high-temperature source, Q_1, is equal to the amount of heat removed from this source during the forward cycle. Hence, the work expended by the external source for the reverse cycle to be realized, is equal exactly to the work transferred to the external consumer during the forward cycle.

Thus, we performed a reverse Carnot cycle, following the path of the forward cycle, i.e. the forward cycle is reversible.

The reversibility of the cycle is due to the fact that the temperatures of the high-temperature source and of the working medium are equal (to an infinitesimal) during the isothermal process between points *1* and *2*, and also because the temperatures of the low-temperature source and of the working medium are equal during the isothermal process from *3* to *4*. If the difference between the temperatures of the heat source and the working medium was finite, the cycle would be irreversible.

In the reversible cycle heat Q_2 is reversibly transferred from the high-temperature source to the low-temperature source. Thus, a reversible cycle can be considered as a method for affecting reversible transport of heat from a body at a higher temperature (heat source) to a body at a lower temperature (heat sink), and vice versa. But if the cycle is irreversible, the process of heat transfer from the heat source to the heat sink is irreversible. The degree of irreversibility of the transfer of heat from the heat source to the heat sink is the greater, the larger the difference between the temperatures of the high-temperature source and the working medium and between the temperatures of the working medium and the low-temperature source. It is clear that the maximum degree of irreversibility corresponds to the transfer of heat from the heat source to the heat sink without the performance of work. In this connection, consider the *thermal efficiency of the Carnot cycle*. In accordance with the definition given above, the thermal efficiency of any cycle is expressed by the ratio

$$\eta = \frac{q_1 - q_2}{q_1}.$$

Assume that the working medium (substance) is an ideal gas with a constant heat capacity. Since the internal energy u of an ideal gas depends only on temperature, it follows that

$$du = c_v dT.$$

With account taken of the above relationship, the mathematical formulation of the first law of thermodynamics for an ideal gas can be presented as

$$dq = c_v dT + p\,dv, \tag{3.18}$$

whence, for an isothermal process (T = const, i.e. $dT = 0$) we get:

$$dq = p\,dv. \tag{3.19}$$

Since, in accordance with Clapeyron's equation, for an ideal gas

$$p = \frac{RT}{v},$$

Eq. (3.19) takes the following form:

$$dq = \frac{RT}{v}\,dv, \tag{3.20}$$

whence

$$q_{\text{I-II}} = RT \ln \frac{v_{\text{II}}}{v_{\text{I}}}; \tag{3.21}$$

where the subscripts "I" and "II" pertain to the initial and final points of a process, respectively. If an ideal gas expands in an isothermal process, i.e. $v_{\text{II}} > v_{\text{I}}$, then, as can be seen from equation (3.21), $q_{\text{I-II}} > 0$, meaning that heat should be added to the gas so that its temperature remains constant in the process of isothermal expansion. But if compression is involved, i.e. $v_{\text{II}} < v_{\text{I}}$, then $q_{\text{I-II}} < 0$.

It follows from the mathematical formulation of the first law of thermodynamics for an ideal gas (Eq. 3.18) that in an adiabatic process ($dq = 0$)

$$p\,dv = -c_v dT. \tag{3.22}$$

Dividing this equation by Clapeyron's equation termwise, we get:

$$\frac{dv}{v} = -\frac{c_v}{R}\frac{dT}{T}. \tag{3.23}$$

Since [see Eq. (2.54)]

$$R = c_p - c_v,$$

we get:

$$(k-1)\frac{dv}{v} = -\frac{dT}{T}, \tag{3.24}$$

where k denotes the ratio of heat capacities c_p and c_v.

Inasmuch as we consider an ideal gas whose heat capacity does not depend on temperature, k will be constant and independent of temperature. Taking this fact into account, we find that integration of Eq. (3.24) yields

$$\left(\frac{v_{\mathrm{II}}}{v_{\mathrm{I}}}\right)^{k-1} = \frac{T_{\mathrm{I}}}{T_{\mathrm{II}}}. \tag{3.25}$$

Let us use these relationships to calculate the thermal efficiency of the Carnot cycle.

As applied to the isothermal processes in the Carnot cycle, with account taken of Eq. (3.21) the formulas for q_1 and q_2 are

$$q_1 = RT_1 \ln\frac{v_2}{v_1}, \tag{3.26}$$

$$q_2 = RT_2 \ln\frac{v_3}{v_4}. \tag{3.27}$$

Substituting Eqs. (3.26) and (3.27) in the equation expressing the thermal efficiency of a cycle, we get:

$$\eta = \frac{T_1 \ln\frac{v_2}{v_1} - T_2 \ln\frac{v_3}{v_4}}{T_1 \ln\frac{v_2}{v_1}}. \tag{3.28}$$

Inasmuch as in the Carnot cycle the adiabatic processes *2-3* and *4-1* proceed under the same temperatures T_1 and T_2, in accordance with Eq. (3.25) we can write for each of these adiabats:

$$\left(\frac{v_3}{v_2}\right)^{k-1} = \frac{T_2}{T_1} \tag{3.29}$$

and

$$\left(\frac{v_4}{v_1}\right)^{k-1} = \frac{T_2}{T_1}; \tag{3.30}$$

consequently,

$$\frac{v_3}{v_2} = \frac{v_4}{v_1}, \tag{3.31}$$

whence, the expression for the thermal efficiency of the Carnot cycle is

$$\eta = \frac{T_1 - T_2}{T_1}. \tag{3.32}$$

As can be seen from Eq. (3.32), the thermal efficiency η depends on T_1 and T_2, with the efficiency being the higher the greater the difference between T_1 and T_2 is. The thermal efficiency of the Carnot cycle becomes

equal to unity in two practically unattainable cases: either when $T_1 = \infty$ or when $T_2 = 0$.

Compare now the thermal efficiencies of the reversible and irreversible Carnot cycles with an ideal gas, realized between the same heat sources which are at temperatures $T_{h.t.}$ and $T_{l.t.}$. In accordance with what was said above, it is clear that to calculate the thermal efficiency of a reversible Carnot cycle we must substitute $T_1 = T_{h.t.}$ and $T_2 = T_{l.t.}$ (accurate to infinite-

Fig. 3.6

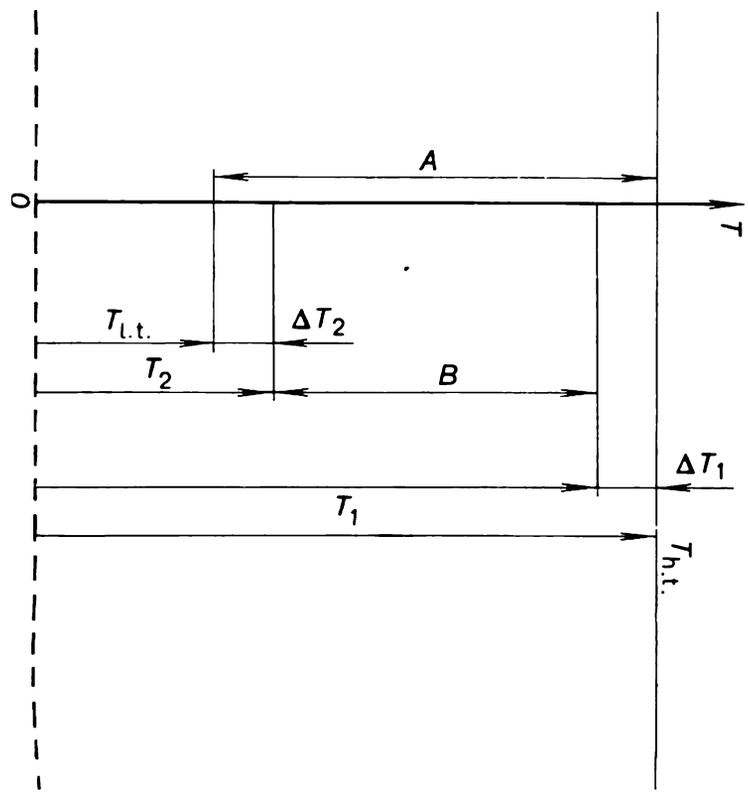

simals) in Eq. (3.32):

$$\eta^{r.c.c.} = \frac{T_{h.t.} - T_{l.t.}}{T_{h.t.}}, \tag{3.33}$$

where $\eta^{r.c.c.}$ is the thermal efficiency of a reversible Carnot cycle.

In an irreversible Carnot cycle there is a finite difference between the temperatures of the heat sources and of the working medium:

$$T_1 = T_{h.t.} - \Delta T_1, \tag{3.34}$$

$$T_2 = T_{l.t.} - \Delta T_2. \tag{3.35}$$

The working temperature interval of the cycle diminishes since $T_1 < T_{h.t.}$ and $T_2 > T_{l.t.}$ (Fig. 3.6). With account taken of these relationships, we obtain from Eq. (3.33):

$$\eta^{ir.c.c.} = \frac{T_{h.t.} - T_{l.t.} - (\Delta T_1 + \Delta T_2)}{T_{h.t.} - \Delta T_1}, \tag{3.36}$$

where $\eta^{ir.c.c.}$ is the thermal efficiency of an irreversible Carnot cycle.

Comparing (3.36) and (3.33), we can see that

$$\eta^{ir.c.c.} < \eta^{r.c.c.}, \tag{3.37}$$

or the thermal efficiency of an irreversible Carnot cycle is smaller than that of a reversible Carnot cycle. Note that this conclusion was obtained only for a Carnot cycle involving an ideal gas with a constant heat capacity.

It should be stressed that the inequality (3.37) was derived with account being taken of only the external irreversibility of the cycle, i.e. the finite temperature difference between the working medium and the heat sources. Actual cycles also involve other factors which bring about, in addition, the internal irreversibility of cycles: processes of friction, the absence of mechanical equilibrium in component elements of an engine, etc. All these circumstances result in an additional decrease of the useful work of the cycle,

Fig. 3.7

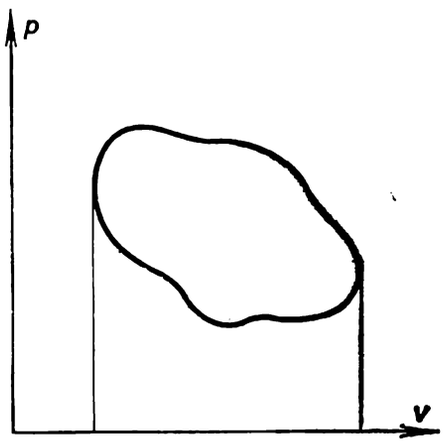

Fig. 3.8

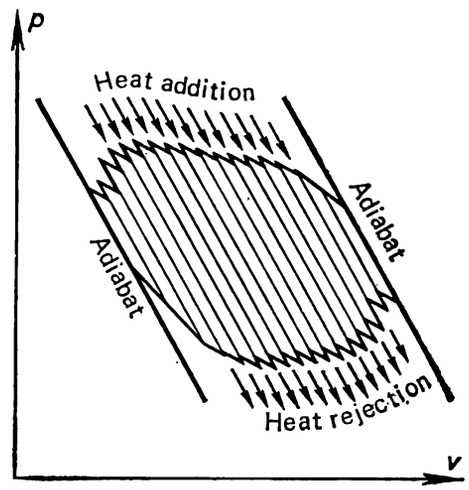

$q_1 - q_2$, and, consequently, to a further decrease of the thermal efficiency of the cycle.

It is clear that not only the Carnot cycle but also any other cycle can be visualized as being reversible (Fig. 3.7).* The condition determining the possibility of reversing these cycles is the same as for the Carnot cycle: an infinitesimal difference between the temperatures of the working medium and of the heat sources. It is essential to note here if the processes of heat addition and heat rejection are nonisothermal and, consequently, the temperature of the working medium changes continuously during the process of heat transfer between the medium and the heat source, the situation becomes still more complicated: even if at the initial point of the process the difference between the temperatures of the working medium and of the heat source is infinitely small, then, inasmuch as the temperature of the working medium varies with a change in its state, a finite temperature difference will set in between the working medium and the heat source and the process of heat transfer will therefore be irreversible. This difficulty is dealt with by introducing the concept of an infinitely great number of heat sources.

What has been said is elucidated in Fig. 3.8. Any reversible cycle of arbitrary shape can be visualized as a totality of elementary Carnot cycles, consisting of two adiabats and two isotherms, with heat being added and rejected in any of the elementary cycles only along corresponding isotherms.

* Various cycles of heat engines and of refrigerating machines are considered in Chapters 9-13.

As was already stated, for this to be accomplished there must be an infinite number of heat sources, and also an infinite number of elementary cycles must be realized. The totality of the elementary Carnot cycles is wholly equivalent to the original arbitrary reversible cycle. Indeed, inasmuch as the adiabatic lines of compression and expansion of each elementary Carnot cycle are infinitely close to each other, the processes of heat addition and rejection can be considered as being isothermal. Inasmuch as each of the adiabats, excluding the two outer ones, serves in total two times as the path of a cycle, and is passed in opposite directions, the work output of the cycle, when replaced by elementary Carnot cycles, does not change.

From the point of view of the number of heat sources the reversible Carnot cycle is most effective, compared with any other reversible cycle: for the cycle to be realized only two heat sources must be available, inasmuch as heat is transferred from the high-temperature source to the working medium and from the latter heat is rejected to the low-temperature source in isothermal processes.

Let us proceed now to the proof of the following important thesis, known as the *Carnot theorem**:

The thermal efficiency of a reversible Carnot cycle, realized between two heat sources, does not depend on the properties of the working medium used to realize the cycle.

The proof of this theorem is based on the rule of contraries. Consider the reversible cycle of a heat engine realized between two heat sources with the aid of some working medium; denote the thermal efficiency of this cycle by η'. Further consider the reversible cycle of a heat engine realized between the same heat sources but with the aid of another working medium; assume that the thermal efficiency of this engine (denoted by η'') differs from the thermal efficiency of the first engine and, for the sake of definiteness, suppose that

$$\eta'' > \eta'. \tag{3.38}$$

The quantities pertaining to the first heat engine will have one prime, and those referring to the second engine, two primes.

Further assume that the second engine operates in a forward cycle, i.e. performs work L_c'', removing heat Q_1'' from the high-temperature source and transferring heat Q_2'' to the low-temperature source. At the same time, operating in a reverse cycle between the same heat sources, the first engine removes heat Q_2' from the low-temperature source, at the expense of work L_c' received from some external source of work, and transfers heat $Q_1' = L_c' + Q_2'$ to the high-temperature source. The schematic layout of these cycles, realized between the same heat sources, is shown in Fig. 3.9. If the amount of the working medium used in one of these engines is given, we can always choose an amount of the working medium for the other engine so that Q_1' will be equal to Q_1''. It is clear that the thermal efficiency in no way depends

* This theorem was formulated and proved by S. Carnot in his work "Réflexions sur la puissance motive de feu" [English translation: Carnot, S. *Reflections on the Motive Power of Fire*, New York, Dover (1960)] published in 1824 (i.e. before the law of equivalence of heat and work has been formulated and generally accepted). Carnot based all his reasonings on the then generally accepted theory of the phlogiston. This, however, in no way affects the general nature of the results obtained by Carnot.

on the amount of the working medium involved in the cycle. It will be the same both for a cycle with 1 kg of the working medium and for a cycle involving 1000 kg of this working medium.

In accordance with Eq. (3.10), the work transferred to the working medium in the cycle proceeding in the first engine is equal to

$$L'_c = \eta' Q'_1, \tag{3.39}$$

the work resulting from the cyclic operation of the second engine is

$$L''_c = \eta'' Q''_1. \tag{3.39a}$$

Fig. 3.9

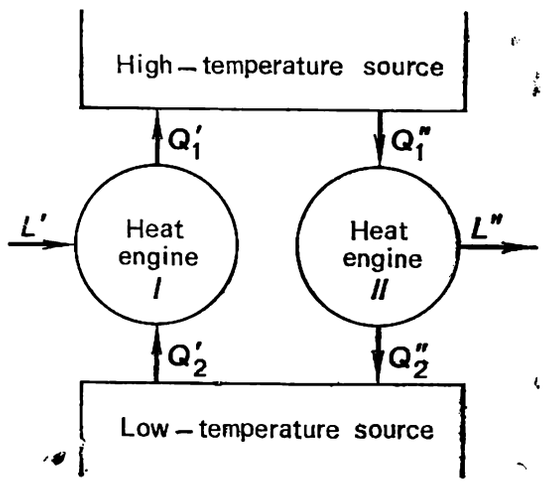

Since we assumed that $\eta'' > \eta'$ and $Q''_1 = Q'_1$, it follows that

$$L''_c > L'_c,$$

or, which is the same,

$$L''_c - L'_c = \Delta L, \tag{3.40}$$

where ΔL is the difference between the work output of the cycle realized in the second engine and the amount of external work added in the cycle realized in the first engine.

Comparing the expressions for the thermal efficiency of the cycles realized in the first and second engines, i.e.

$$\eta' = \frac{Q'_1 - Q'_2}{Q'_1}, \tag{3.41}$$

$$\eta'' = \frac{Q''_1 - Q''_2}{Q'_1}, \tag{3.41a}$$

and taking into account inequality (3.38), we obtain:

$$\frac{Q''_1 - Q''_2}{Q''_1} > \frac{Q'_1 - Q'_2}{Q'_1}. \tag{3.42}$$

Since

$$Q''_1 = Q'_1,$$

Eq. (3.42) reduces to

$$Q''_1 - Q''_2 > Q'_1 - Q'_2,$$

and further

$$Q_2' > Q_2''. \tag{3.43}$$

Hence, in the reverse cycle the amount of heat removed from the low-temperature source is greater that the amount of heat added to the low-temperature source upon realization of the forward cycle. As regards the high-temperature source, since

$$Q_1'' = Q_1',$$

the amount of energy stored in the high-temperature source does not change after the realization of the forward and reverse cycles.

Thus, we arrive at the conclusion that the realization of the two reversible cycles considered, i.e. the forward and reverse cycles, results in the heat $\Delta Q = Q_2' - Q_2''$ being removed from the low-temperature source and, whence, work ($\Delta L = L_c'' - L_c'$), equivalent to this amount of heat* is produced. The thermal state of the high-temperature source undergoes no changes, however.

This conclusion violates the second law of thermodynamics as stated by Planck. Consequently, the initial prerequisite that the thermal efficiencies of the considered reversible cycles, which are realized with different working media between the same heat sources, are different, is erroneous. In this way the Carnot theorem is proved.

This theorem is true for *reversible* cycles realized between two heat sources.

We can prove this theorem in another way. Select the amounts of the working medium for the first and second engines so that the work done by the second engine in the forward cycle is equal to the work consumed by the first engine, operating in the reverse cycle:

$$L_c' = L_c'', \tag{3.44}$$

or, which is the same,

$$Q_1' - Q_2' = Q_1'' - Q_2''. \tag{3.44a}$$

If this is true, the work required to realize the reverse cycle can be transferred to the first engine not from some external source of work but from the second engine, producing an amount of work equal exactly to the amount of work consumed by the first engine.

Since, according to Eq. (3.41),

$$\eta' = \frac{Q_1' - Q_2'}{Q_1'} = \frac{L_c'}{Q_1'}$$

and, in accordance with Eq. (3.41a),

$$\eta'' = \frac{Q_1'' - Q_2''}{Q_1''} = \frac{L_c''}{Q_1''},$$

with account taken of Eq. (3.44), from Eq. (3.38) we get:

$$Q_1'' < Q_1', \tag{3.45}$$

i.e. during the realization of the reverse cycle more heat is transferred to the high-temperature source than is removed from it during the forward

* Since $L_c' = Q_1' - Q_2'$ and $L_c'' = Q_1'' - Q_2''$, it follows from Eq. (3.40) that $\Delta L = (Q_1'' - Q_1') - (Q_2'' - Q_2')$. From the equality $Q_1'' = Q_1'$ it follows that $\Delta L = Q_2' - Q_2''$, or $\Delta L = \Delta Q$.

cycle:

$$\Delta Q_1 = Q_1' - Q_1''. \tag{3.46}$$

With account taken of this inequality, it follows from Eq. (3.44a) that

$$Q_2' > Q_2'',$$

i.e. during the realization of the reverse cycle more heat is removed from the low-temperature source than it receives in the forward cycle:

$$\Delta Q_2 = Q_2' - Q_2''. \tag{3.47}$$

From equation (3.44a) it follows that

$$\Delta Q_1 = \Delta Q_2. \tag{3.48}$$

Thus, we arrived at the conclusion that while the two reversible cycles considered (the forward and the reverse) are realized, heat flows spontaneously and without any work expenditure (since $L_c' = L_c''$), from a body at a lower temperature (the low-temperature source) to a body at a higher temperature (the high-temperature source). This conclusion is also erroneous, since it violates Clausius' statement of the second law of thermodynamics.

Thus, in accordance with the Carnot theorem, the thermal efficiency of any reversible cycle realized between two heat sources does not depend on the properties of the working medium involved. Consequently, all conclusions that were previously drawn on the basis of the reversible Carnot cycle for an ideal gas with a constant heat capacity, are true for a reversible Carnot cycle with any working medium. In particular, the previously obtained expression (3.32) for the thermal efficiency of a cycle, $\eta^{\text{r.c.c.}} = (T_1 - T_2)/T_1$ is applicable to any reversible Carnot cycle.

3.5 The thermodynamic temperature scale

Temperature is measured with the aid of instruments based on the determination of one or another property of substance varying with temperature. These instruments are calibrated in accordance with the temperature scale generally accepted. When devising a particular temperature scale, however, difficulties arise, traced to the fact that the properties of every substance change in the same temperature interval in a different way. The design of many thermometers, for instance, is based on the phenomenon of the expansion of liquid with a rise in temperature; thermometers of this kind include the commonly known liquid-filled (mercury or alcohol) thermometers, in which the length of the column of liquid increases with a rise in temperature. The coefficient of thermal expansion of one and the same liquid is different at different temperatures, which hampers the establishment of a temperature scale. In 1742 the Swedish astronomer A. Celsius suggested to assign the temperature of 0 °C to the melting point of ice and 100 °C to the boiling point of water and to divide the distance between the two points into one hundred equal intervals.* However, if the column of mercury, filling the distance

* Celsius assigned the temperature 100 °C to the melting point of ice and the temperature of 0 °C to the boiling point of water; later on the presently accepted values were assigned to these scale marks.

between the marks of the ice melting point and of the boiling point of water, is divided into 100 equal intervals, then, taking into account the dependence of the mercury coefficient of expansion on temperature, we shall find that one and the same increase in the length of the column of mercury will correspond to different temperature increments. The value of one division of a uniform temperature scale based on various thermometric liquids will be different. If, for instance, a thermometer is filled with water, then when this thermometer is heated from the melting point of ice, a strange phenomenon can be observed: instead of rising with an increase in temperature, the column of water falls below the level (or mark) corresponding to the melting point of ice. The fact is that at atmospheric pressure the density of water is maximum at a temperature of 3.98 °C. Hence, when heated from 0 to 3.98 °C, the volume of the water filling the thermometer decreases (and so the top of the column of water moves down in the thermometer).

In the past temperature scales were established based on different thermometric substances, but then the ideal gas was found to be one of the most suitable thermometric substance. In fact, Clapeyron's equation permits temperature to be determined from the relationship

$$T = \frac{pv}{R}.$$

One of the temperature scales (the so-called *ideal-gas scale*) can be established by measuring the pressure of a gas*, whose properties make it close to an ideal one, kept in a vessel of constant volume (v = const). The advantage of this scale is that at v = const the volume of an ideal gas is related to the temperature by a linear dependence.** Since, as was already noted in Sec. 1.3, even at low pressures a real gas differs somewhat from an ideal gas in respect to properties, the realization of the ideal-gas temperature scale also involves a number of difficulties.

The second law of thermodynamics permits the establishment of a temperature scale that does not depend on the properties of the thermometric substance. Indeed, according to the Carnot theorem, which states that the thermal efficiency of a reversible Carnot cycle does not depend on the properties of the working medium, it can be argued that the thermal efficiency of the cycle depends only on the temperatures of the high- and low-temperature sources:

$$\eta^{\text{r.c.c.}} = \frac{Q_1 - Q_2}{Q_1} = f(\theta_1, \theta_2), \tag{3.49}$$

where θ_1 and θ_2 are the temperatures of the high- and low-temperature sources.

Formula (3.49) yields

$$\frac{Q_1}{Q_2} = f(\theta_1, \theta_2). \tag{3.50}$$

* Since Clapeyron's equation is used to establish an ideal-gas temperature scale, to determine whether a given gas is close to an ideal one use should be made of another characteristic of ideal gases not related to Clapeyron's equation. Such a characteristic is the independence of the internal energy of an ideal gas on volume (Joule's law), established in Chapter 2.

** The ideal-gas temperature scale can be divided into any number of intervals (or degrees) since the number of intervals does not affect the properties of the scale, i.e. an ideal-gas scale can be made similar to the Celsius scale, Fahrenheit scale, Reaumur scale and other uniformly divided (linear) temperature scale.

Consider three heat sources which are at temperatures θ_1, θ_2, θ_3 provided $\theta_1 > \theta_2 > \theta_3$. Assume that the following reversible Carnot cycles are realized between these sources: cycle *I* between the heat sources at temperatures θ_1 and θ_2, cycle *II* between the heat sources at temperatures θ_2 and θ_3, and cycle *III* between the heat sources at temperatures θ_1 and θ_3 (Fig. 3.10).

In cycle *I* heat Q_1 is removed from the source with temperature θ_1 (the high-temperature source for this cycle) and heat Q_2 is transferred to the source with temperature θ_2 (the low-temperature source for this cycle). In cycle *II* the same amount of heat Q_2 is removed from the heat source with temperature θ_2 (for cycle *II* this source serves at the high-temperature source), previously received by this source when cycle *I* was

Fig. 3.10

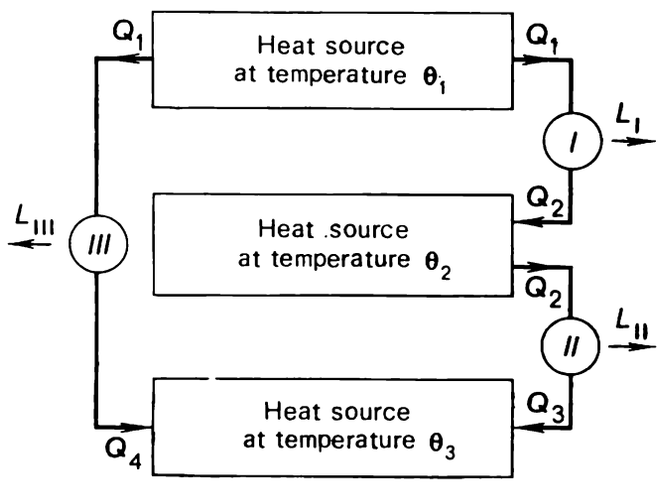

realized; the heat added to the source with temperature θ_3 (the low-temperature source for this cycle) we denote by Q_3. Finally, in cycle *III* an amount of heat Q_1, equal to that involved in cycle *I*, is removed from the high-temperature source with temperature θ_1; the heat transferred during this cycle to the low-temperature source with temperature θ_3 we denote by Q_4. By analogy with Eq. (3.50), for cycle *I*

$$\frac{Q_1}{Q_2} = f(\theta_1, \theta_2), \tag{3.51}$$

for cycle *II*

$$\frac{Q_2}{Q_3} = f(\theta_2, \theta_3), \tag{3.52}$$

and for cycle *III*

$$\frac{Q_1}{Q_4} = f(\theta_1, \theta_3). \tag{3.53}$$

The jointly accomplished cycles *I* and *II* can be regarded as a combined reversible cycle realized between the same heat sources of cycle *III*, with temperatures θ_1 and θ_3. The thermal efficiency of this cycle is obviously

$$\eta^{\text{I-II}} = \frac{Q_1 - Q_3}{Q_1}. \tag{3.54}$$

The thermal efficiency of cycle *III* is in turn equal to

$$\eta^{\text{III}} = \frac{Q_1 - Q_4}{Q_1}. \tag{3.55}$$

The thermal efficiency of any reversible cycle realized between two heat sources will be shown in Sec. 3.6 to be equal to the thermal efficiency of a reversible Carnot cycle with the same heat sources.

It follows then that the thermal efficiency of the combined reversible cycle considered will be equal to the thermal efficiency of the reversed cycle *III*. But according to Eqs. (3.54) and (3.55), this is possible provided

$$Q_3 = Q_4. \tag{3.56}$$

Dividing Eq. (3.53) by Eq. (3.52) and taking condition (3.56) into account, we obtain:

$$\frac{Q_1}{Q_2} = \frac{f(\theta_1, \theta_3)}{f(\theta_2, \theta_3)}. \tag{3.57}$$

On the other hand, according to Eq. (3.50),

$$\frac{Q_1}{Q_2} = f(\theta_1, \theta_2).$$

Comparing the above expression with Eq. (3.57), we find that

$$f(\theta_1, \theta_2) = \frac{f(\theta_1, \theta_3)}{f(\theta_2, \theta_3)}.$$

But this is only possible if

$$f(\theta_1, \theta_2) = \frac{\psi(\theta_1)}{\psi(\theta_2)},$$

where the functions $\psi(\theta_1)$ and $\psi(\theta_2)$ do not depend on temperature θ_3.

Consequently,

$$\frac{Q_2}{Q_1} = \frac{\psi(\theta_2)}{\psi(\theta_1)},$$

and the expression (3.41) for the thermal efficiency of a reversible Carnot cycle takes the following form:

$$\eta = 1 - \frac{\psi(\theta_2)}{\psi(\theta_1)}. \tag{3.58}$$

For a reversible Carnot cycle realized within an infinitely small temperature interval, i.e. $\theta_1 = \theta_2 + d\theta$, Eq. (3.58) takes the form

$$\eta = \frac{dQ}{Q} = \frac{\psi(\theta_1) - \psi(\theta_1 - d\theta)}{\psi(\theta_1)}. \tag{3.59}$$

We expand the function $\psi(\theta_1 - d\theta)$ in a Taylor series:

$$\psi(\theta_1 - d\theta) = \psi(\theta_1) - \psi'(\theta_1)\, d\theta + \frac{\psi''(\theta_1)}{2}(d\theta)^2 - \ldots. \tag{3.60}$$

Confining ourselves to the first two terms in the expansion, from Eq. (3.59) we find that

$$\eta = \frac{dQ}{Q} = \frac{\psi'(\theta_1)}{\psi(\theta_1)} d\theta. \tag{3.61}$$

Since the temperature θ_1 is chosen arbitrarily, it will be denoted by θ in the following text.

Also introduce the following notation:

$$\frac{\psi'(\theta)}{\psi(\theta)} = F(\theta). \tag{3.62}$$

With account taken of this notation, for a reversible Carnot cycle realized within an infinitely small temperature interval, Eq. (3.61) takes the following appearance:

$$\eta = \frac{dQ}{Q} = F(\theta)\, d\theta. \tag{3.63}$$

This differential equation relates unambiguously the thermal efficiency of a reversible Carnot cycle and temperature θ, referred to as the *thermodynamic temperature*. Since the thermal efficiency of a reversible Carnot cycle does not depend on the properties of the working medium (or substance), the thermodynamic temperature θ, determined via η, does not depend on these properties, too.

Integrating Eq. (3.63), we obtain:

$$\ln \frac{Q}{Q_0} = \int_{\theta_0}^{\theta} F(\theta)\, d\theta, \tag{3.64}$$

where θ_0 is some constant temperature, and Q_0 is the amount of heat Q corresponding to this temperature.

From equation (3.64) it follows that using the thermal efficiency of a reversible engine operating in the Carnot cycle*, it is possible to establish a number of thermodynamic temperature scales by specifying the function $F(\theta)$ and the temperature θ_0 assigned to the thermal state selected.

Kelvin suggested selecting the function $F(\theta)$ so that the temperature intervals on the scale would be proportional to the thermal efficiency increments. As Eq. (3.63) indicates, the function $F(\theta)$ must then be assumed equal to some constant

$$F(\theta) = b. \tag{3.65}$$

Taking (3.65) into account, Eq. (3.64) gives:

$$\ln \frac{Q}{Q_0} = b(\theta - \theta_0). \tag{3.66}$$

Let us now select the thermodynamic temperatures θ_1 and θ_2 whose corresponding quantities in Eq. (3.66) are Q_1 and Q_2, i.e.

$$\ln \frac{Q_1}{Q_0} = b(\theta_1 - \theta_0), \tag{3.67}$$

$$\ln \frac{Q_2}{Q_0} = b(\theta_2 - \theta_0). \tag{3.68}$$

Let the temperature difference $(\theta_1 - \theta_2)$ be equal to an exactly selected temperature interval n°, i.e.

$$\theta_1 - \theta_2 = n^\circ \tag{3.69}$$

---

* The value Q/Q_0 present in Eq. (3.64) is, evidently, related to the thermal efficiency of a reversible Carnot cycle accomplished between the temperatures θ and θ_0 in the following way: by definition

$$\eta = \frac{Q - Q_0}{Q},$$

whence,

$$\frac{Q}{Q_0} = \frac{1}{1-\eta}.$$

(for instance, the difference between the boiling point of water and the melting point of ice).

Subtracting (3.68) from (3.67), we get:

$$\ln \frac{Q_1}{Q_2} = b(\theta_1 - \theta_2), \tag{3.70}$$

whence, with account taken of equation (3.69),

$$b = \frac{\ln \frac{Q_1}{Q_2}}{n^\circ}. \tag{3.71}$$

Fig. 3.11

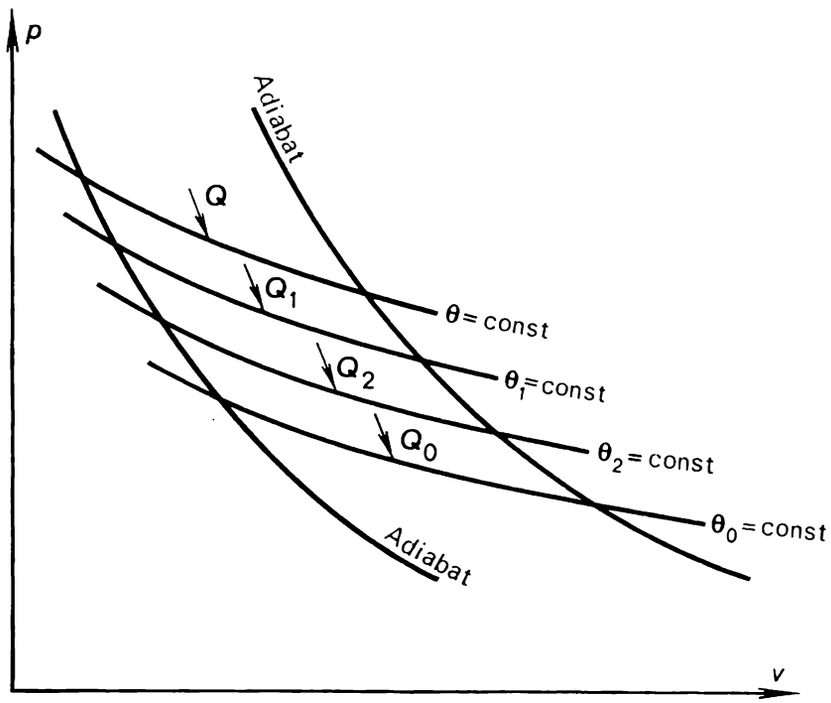

Substituting this expression for b in Eq. (3.66), we obtain the thermodynamic temperature θ:

$$\theta = \theta_0 + \frac{\ln \frac{Q}{Q_0}}{\ln \frac{Q_1}{Q_2}} n^\circ. \tag{3.72}$$

The quantities Q, Q_0, Q_1 and Q_2 are the heats of isothermal expansion of a working medium between two arbitrary adiabats of a reversible Carnot cycle (Fig. 3.11). In other words, for a reversible Carnot cycle realized between the temperature interval $\theta - \theta_0$, the quantity Q is the amount of heat added to the working medium from the high-temperature source with a temperature θ and Q_0 is the amount of heat rejected from the working medium to the low-temperature source with a temperature θ_0. Similarly, Q_1 and Q_2 represent the amounts of heat added and removed in a reversible Carnot cycle realized within the temperature difference $\theta_1 - \theta_2$. In general, the magnitude of Q_1, Q_2, Q_0 and Q can be determined experimentally. Knowing the magnitudes of Q_1, Q_2, Q_0 and Q and making use of Eq. (2.73), we can find the value of θ on this scale for any value of Q.

The thermodynamic temperature scale established with the aid of Eq. (3.72) is called the *logarithmic scale.*

If in evaluating the magnitude of one degree of this scale the main interval or distance from the melting point of ice to the boiling point of water must be assigned 100°, the temperature θ_1 should be assigned to the melting point of ice, and temperature θ_2 to the boiling point of water, and the difference between these temperatures should be assumed equal to 100°:

$$n^\circ = \theta_1 - \theta_2 = 100^\circ.$$

As regards the selection of the constant quantity θ_0, Kelvin assumed that

$$\theta_0 = 0,$$

i.e. equal to the melting point of ice. Thus, relation (3.72) takes the form

$$\theta = \frac{\ln \frac{Q}{Q_0}}{\ln \frac{Q_1}{Q_2}} \cdot 100. \tag{3.73}$$

It is clear that at a temperature $\theta < \theta_0$, Q becomes smaller than Q_0. Then the quantity $\ln \frac{Q}{Q_0}$ and, consequently, θ become negative. At $Q \to 0$, $\theta \to -\infty$; at $Q \to \infty$, $\theta \to \infty$.

In this way, on the logarithmic scale temperature (denoted by $^\circ L$) can vary within the following limits:

$$-\infty < \theta\,^\circ L < \infty. \tag{3.74}$$

Table 3.1 gives the relation between the most commonly used uniform thermodynamic temperature scale established by Kelvin (described in detail

Table 3.1 The absolute thermodynamic scale and the logarithmic thermodynamic scale

θ (K)	θ (°L)	θ (K)	θ (°L)
∞	∞	100	−322
1 000 000	2630	10	−1060
100 000	1892	1	−1798
10 000	1154	0.1	−2536
1 000	416	0.01	−3274
373.15	100	0.001	−4012
273.15	0	0	$-\infty$

below) and the logarithmic thermodynamic scale. As can be seen from the data given in the table, the logarithmic scale fails to coincide numerically with the previously accepted conventional scale; that is why this scale has found no recognition.

A more convenient scale can be established by choosing the temperature function $F(\theta)$ in the form

$$F(\theta) = \frac{1}{\theta + \theta_0}, \tag{3.75}$$

where θ_0 is a constant temperature.

Substituting this function in Eq. (3.64) and integrating, we obtain:

$$\ln \frac{Q}{Q_0} = \ln \frac{\theta + \theta_0}{2\theta_0} \tag{3.76}$$

whence

$$\frac{Q}{Q_0} = \frac{\theta + \theta_0}{2\theta_0}. \tag{3.77}$$

From relationship (3.77) it follows that

$$\theta = 2\theta_0 \frac{Q}{Q_0} - \theta_0 \tag{3.78}$$

or, which is the same,

$$\theta = \frac{2\theta_0 (Q - Q_0)}{Q_0} + \theta_0. \tag{3.79}$$

For temperatures θ_1 and θ_2, the corresponding amounts of heat being Q_1 and Q_2, we obtain from Eq. (3.77)*:

$$Q_1 = Q_0 \frac{\theta_1 + \theta_0}{2\theta_0} \tag{3.80}$$

and

$$Q_2 = Q_0 \frac{\theta_2 + \theta_0}{2\theta_0}. \tag{3.81}$$

Subtracting (3.81) from (3.80), we obtain:

$$Q_1 - Q_2 = \frac{Q_0 (\theta_1 - \theta_2)}{2\theta_0}. \tag{3.82}$$

Let, as before, the temperature difference, $\theta_1 - \theta_2$, be equal to the temperature interval selected, n°, i.e.

$$\theta_1 - \theta_2 = n^\circ.$$

Then, from Eq. (3.82) it follows that

$$\frac{2\theta_0}{Q_0} = \frac{n^\circ}{Q_1 - Q_2}. \tag{3.83}$$

Substituting this quantity in Eq. (3.79), for the thermodynamic temperature we get:

$$\theta = \theta_0 + \frac{Q - Q_0}{Q_1 - Q_2} n^\circ. \tag{3.84}$$

The thermodynamic temperature scale, established by Eq. (3.84), is called the *Kelvin thermodynamic temperature scale.*

From the expression for the maximum thermal efficiency of the Carnot cycle accomplished within the temperature difference $\theta - \theta_0$,

$$\eta = \frac{Q - Q_0}{Q}, \tag{3.85}$$

it follows that the thermal efficiency of the Carnot cycle reaches its maximum value ($\eta = 1$) when no heat is transferred to the low-temperature source,

* The meaning of the quantities Q, Q_0, Q_1 and Q_2 is, of course, the same as in the reasonings for the logarithmic scale.

i.e. when $Q_0 = 0$. Since the thermal efficiency of a cycle cannot exceed unity*, the heat transferred to the low-temperature source in a reversible Carnot cycle cannot be less than zero. Hence, no isotherm can exist below the isotherm corresponding to $Q_0 = 0$. The temperature corresponding to this isotherm is called the *absolute zero temperature* or simply *absolute zero*:

$$\theta_0 = 0. \tag{3.86}$$

The quantity θ_0 can be assigned any positive values, whereas, in accordance with the foregoing, the values $\theta_0 < 0$ have no physical meaning.

If we assume $\theta_0 = 0$, Eq. (3.84) takes the form

$$\theta = \frac{Q}{Q_1 - Q_2} n^\circ. \tag{3.87}$$

Assuming, as before, that $n^\circ = \theta_1 - \theta_2 = 100^\circ$, from Eq. (3.87) we obtain:

$$\theta = \frac{Q}{Q_1 - Q_2} \cdot 100^\circ. \tag{3.88}$$

The Kelvin thermodynamic scale established on the basis of this equation is called the *absolute thermodynamic scale* (*Kelvin scale*, K).

It is clear from Eq. (3.88) that for the temperature θ_2,

$$\theta_2 = \frac{Q_2}{Q_1 - Q_2} \cdot 100^\circ. \tag{3.89}$$

From Eqs. (3.88) and (3.89) we get:

$$\theta \mathrm{K} = \frac{Q}{Q_2} \theta_2, \tag{3.90}$$

i.e. in order to measure any temperature θ on the absolute scale, the magnitude of the temperature θ_2 must be known, i.e. we must determine by experiment the distance from temperature θ_2 to the absolute zero temperature, $\theta_0 = 0$ K.

The melting point of ice θ_2 has been shown experimentally to be equal to 273.15 K on the absolute temperature scale.**

The temperature determined on the absolute thermodynamic scale will be denoted below by T. From the foregoing it follows that the quantity T can be positive or equal to zero.

Just like the absolute scale, the 100-degree thermodynamic scale (the Celsius scale, °C) can be easily defined: we assume that $\theta_0 = \theta_2 = 0$. Then, since $Q_0 = Q_2$ in this case, from Eq. (3.84) we get:

$$\theta\,^\circ\mathrm{C} = \frac{Q - Q_2}{Q_1 - Q_2} \cdot 100^\circ. \tag{3.91}$$

If $\theta = \theta_1$, in Eq. (3.91) $Q = Q_1$ and $\theta = 100$ °C as could be expected (inasmuch as the interval between the temperatures θ_1 and θ_2 is divided into 100 units, or degrees).

It is clear from the foregoing that

$$\theta\,^\circ\mathrm{C} = \theta\,\mathrm{K} - 273.15.$$

The temperature of the Celsius scale will be denoted by t.

---

* This would violate the first law of thermodynamics.

** It can be shown that if the magnitude of the interval $n^\circ = 100^\circ$ is given, the temperature θ_2 cannot be chosen arbitrarily. On the contrary, if an arbitrary value is assigned to the temperature θ_2, the temperature interval $\theta_1 - \theta_2$ will not necessarily be equal to 100° at all.

Let us now compare the temperature on the thermodynamic scale established on the basis of Eq. (3.88) with the temperature on the ideal-gas scale. Denoting in the further reasonings the temperature on the ideal-gas scale by T^*, in accordance with Clapeyron's equation (which, as mentioned above, was used to establish the ideal-gas temperature scale) we have:

$$pv = RT^*. \tag{3.92}$$

On the other hand, using the thermodynamic temperature T, we can write for an ideal gas

$$pv = f(T). \tag{3.93}$$

In accordance with Eq. (2.34), for an ideal gas we have:

$$\left(\frac{\partial u}{\partial v}\right)_T = 0.$$

Below, in Chapter 4, the following differential equation will be derived:

$$\left(\frac{\partial u}{\partial v}\right)_T = T\left(\frac{\partial p}{\partial T}\right)_v - p;$$

for the time being, this should be taken for granted.

With account taken of Eq. (2.34) this reduces to

$$\left(\frac{\partial p}{\partial T}\right)_v = \frac{p}{T}. \tag{3.94}$$

Differentiating Eq. (3.93) with respect to temperature, provided that $v = \text{const}$, we obtain:

$$\left(\frac{\partial p}{\partial T}\right)_v v = \frac{df(T)}{dT}. \tag{3.95}$$

Substituting $(\partial p/\partial T)_v$ from Eq. (3.94), we get:

$$pv = T\frac{df(T)}{dT}. \tag{3.96}$$

Comparing Eqs. (3.93) and (3.96), we obtain:

$$f(T) = T\frac{df(T)}{dT}.$$

Integration of this differential equation yields:

$$\ln f(T) = \ln T + \text{const}, \tag{3.97}$$

or

$$f(T) = \chi T, \tag{3.98}$$

where χ is a constant.

Let us now find the magnitude of the constant χ. Substituting the term $f(T)$ from Eq. (3.98) in (3.93), we obtain for an ideal gas:

$$pv = \chi T \tag{3.99}$$

This relationship is the equation of state for an ideal gas, in which the temperature is measured on the thermodynamic scale.

On the other hand, as can be seen from Eq. (3.92), the same equation of state, incorporating an ideal-gas temperature, has the following appearance:

$$pv = RT^*.$$

It is clear from Eqs. (3.92) and (3.99) that

$$T^* = \frac{\chi}{R} T. \tag{3.100}$$

In accordance with (3.100), for the two main temperatures, the melting point of ice and the boiling point of water, we have:

$$T_m^* = \frac{\chi}{R} T_m \tag{3.101}$$

and

$$T_b^* = \frac{\chi}{R} T_b. \tag{3.102}$$

In accordance with the conditions specified, on both scales

$$T_b^* - T_m^* = T_b - T_m = 100. \tag{3.103}$$

On the other hand, it follows from Eqs. (3.101) and (3.102) that

$$T_b^* - T_m^* = \frac{\chi}{R} (T_b - T_m). \tag{3.104}$$

Comparing (3.103) and (3.104), we see that

$$\frac{\chi}{R} = 1, \tag{3.105}$$

and thus

$$T^* = T, \tag{3.106}$$

i.e. the temperature measured on the ideal-gas temperature scale coincides with the absolute thermodynamic temperature measured on the scale established on the basis of Eq. (3.88).*

This conclusion is of paramount importance; all the relationships which were previously derived for the temperatures measured on the ideal-gas scale will obviously be also true for thermodynamic temperatures. That is why the thermodynamic temperature will be denoted by the same letter T, used thus far to designate the ideal-gas scale temperature. Employing such notation, it should be borne in mind that only thermodynamic temperature will be dealt with below (although the old notation is retained). As it will be shown below, it is exactly the thermodynamic temperature which is present in the so-called combined mathematical formulation of the first and second laws of thermodynamics, and also in all other relationships based on this equation.

It should be stressed once more that although the thermodynamic and the ideal-gas scales have been shown to be absolutely identical numerically,

* On the ideal-gas scale temperature can be measured not only in degrees Celsius or Kelvin but also in other units; the properties of this scale do not depend on the value of the scale unit. In some countries the Fahrenheit (°F), Rankine (°Ra), or Reaumur (°R) scales are applied, which was already mentioned in Sec. 1.1; temperatures of one scale may be converted into temperatures of another scale. As distinct from the Celsius scale, on the Fahrenheit and Reaumur scales the interval between the melting point of ice and the boiling point of water is not divided into 100 units but into 180 and 80 units, respectively. In addition, on the Eahrenheit scale the melting point of ice is assigned to the temperature of 32 °F. The Rankine scale is an absolute scale, like the Kelvin scale; the temperature on the Rankine scale is 9/5 of that on the Kelvin scale. Thus, on the Rankine scale, just as on the Fahrenheit scale, the main temperature interval is divided into 180 units. The conversion data for Fahrenheit, Rankine, and Reaumur temperature scales, in relation to temperatures on the Celsius scale, are given in Table 1.1.

from the qualitative point of view they differ from each other essentially: the thermodynamic scale is the only temperature scale which does not depend on the properties of the thermometric substance involved, as distinguished from other temperature scales, among them the ideal-gas temperature scale.

An exact reproduction of the thermodynamic temperature scale, just like an exact reproduction of the ideal-gas scale, entails a number of serious experimental difficulties.

The establishment of the thermodynamic scale, based directly on Eqs. (3.90) or (3.91), would be practically inexact since the measurement of thermodynamic temperature would then resolve in measuring the amount of heat added or removed (rejected) in isothermal processes; measurements of this kind are rather inexact.

The thermodynamic temperature scale can also be established in principle with the aid of other techniques, using to this end various thermodynamic regularities.

For the temperature interval from 10 K to 1336 K, in particular, use is made of the ideal-gas thermometer method (i.e. an ideal-gas scale similar to the thermodynamic scale is accomplished). For temperatures below 10 K and above 1336 K (the melting point of gold) other methods are used, whose consideration is beyond the scope of this book.

The measurement of thermodynamic temperature with each of these methods involves many difficulties. Indeed, the gas-filled thermometers, used to measure temperature on the ideal-gas scale, are cumbrous and complicated devices,* which are extremely hard to handle in experimental work, the more so, as it was already mentioned above, it is necessary to introduce numerous corrections (for gas nonideality, for instance) into the readings of such thermometers. Taking these difficulties into account, the 7th General Conference on Weights and Measures, 1927, adopted the so-called *International Temperature Scale*, which can be easily applied to experimental work.

In principle, any practical temperature scale is a totality of so-called fixed points (i.e. of easily realizable states of this or another substance, whose temperature is known) and interpolation formulas, giving the magnitude of temperature based on thermometer readings. So, for instance, two fixed points are used to establish the conventional uniform centigrade scale of the mercury-in-glass thermometer, the melting point of ice (assigned 0 °C) and the boiling point of water (assigned 100 °C); the interpolation formula relating the height of the column of mercury in this thermometer and the temperature being measured is simple:

$$h_t = h_0 (1 + At)$$

where h_0 and h_t are the heights of the column of mercury at 0 °C and at the temperature t being measured, respectively.

This equation has two constant factors, h_0 and A, which are determined with the aid of the fixed points. The number of fixed points which must be available to establish this or another empirical temperature scale is determined by the number of constant factors present in the interpolation formula. In particular, for the uniform centigrade scale of the above-mentioned mercury-in-glass thermometer, the constant h_0 is determined by the fixed point 0 °C, and the constant A is determined, as it follows from the relation $h_t = f(t)$, from the known quantities h_0 and h_{100} (the height of the column of mercury at the 100 °C fixed point) in the following way:

$$A = \frac{h_{100} - h_0}{100 h_0}.$$

In establishing various temperature scales, the so-called triple point of water, the freezing points of antimony, sulphur, zink, gold, and other points were or are being used as fixed points, in addition to the above-mentioned melting point of ice and the boiling point of water at atmospheric pressure. The numerical values of the temperatures corresponding to each fixed point are strictly determined with the aid of a gas thermometer (as was already mentioned, the thermodynamic temperature scale was shown by Kelvin to require only one fixed point).

The International Temperature Scale adopted in 1927 is a convenient scale, since it can be easily realized in experimental work. In particular, for the temperature interval from —182.97 °C (the boiling point of liquid oxygen at atmospheric pressure) to 660 °C

* The fact is that for the gas used in a thermometer of this kind, whose properties make it a real gas, to be as close as possible to an ideal gas, its pressure must be low, and its specific volume is thus large.

the scale was established using the readings of a standard platinum resistance thermometer *. The International Temperature Scale was established so (i.e. the empirical formulas for the dependence of the electrical resistance of a platinum thermometer on temperatures were so selected)** to coincide as close as possible with the centigrade thermodynamic scale (the accuracy being on the level of the measurement accuracy of a gas-filled thermometer reached at that time, i.e. by 1927).

Persistent and thorough investigations and the development of a corresponding measuring technique permitted metrologists to raise the accuracy of establishing the thermodynamic temperature scale and on this basis determine the deviation of the readings on the International Temperature Scale (T_{Int}) from the readings on the thermodynamic scale (T). In particular, at the 9th General Conference on Weights and Measures, 1948, an equation was proposed, relating the temperature readings taken on the International Temperature Scale and on the centigrade thermodynamic scale in the temperature interval from 0 °C to 444.6 °C:

$$T - T_{\text{Int}} = (0.041\,06 - 7.363 \times 10^{-5} T_{\text{Int}}) \frac{T_{\text{Int}}}{100} \left(\frac{T_{\text{Int}}}{100} - 1 \right)^{\circ} \text{C}.$$

In the last few years the magnitudes of these deviations have been somewhat corrected, compared with the values calculated from this equation, the order of magnitudes, however, remaining unchanged.

The temperature scale currently in common usage is *The International Practical Temperature Scale* of 1968 (IPTS-68) adopted by the International Committee on Weights and Measures, 1968. This scale is so selected that the temperature readings on it are close to the thermodynamic temperature and the difference between the two temperatures stays within the up-to-date measurement errors.

It must be emphasized that thermodynamic temperature appears in all thermodynamic relationships, and in all precision experimental investigations temperature is measured with the aid of instruments that are calibrated following the international scale. In this connection, it should be borne in mind that when experimental data are substituted in thermodynamic equations used in calculation, then, strictly speaking, not the experimentally measured temperature (international scale) but the thermodynamic temperature must be substituted in these equations. This thermodynamic temperature T can be calculated on the basis of the experimentally measured temperature T_{Int} from the relation

$$T = T_{\text{Int}} + \Delta$$

where the correction Δ is determined from the foregoing correction formula. As can be seen from the equation $T - T_{\text{Int}} = f(T_{\text{Int}})$, the correction Δ is rather small. Therefore, in applications in which we handle relatively (compared with the magnitude of Δ) inexact experimental data (which is usually the case), the difference between T and T_{Int} can be ignored, since its magnitude will certainly fall beyond the limit of accuracy of such experimental data.

However, when dealing with extra-accurate experimental data (such as, for instance, the most accurate data on the specific volumes of water vapour in equilibrium with boiling water) and, in particular, with accurate thermodynamic calculations involving the derivatives of various quantities in respect to temperature, the neglect of the difference between T and T_{Int}, when using thermodynamic equations for practical purposes, may lead to errors comparable with the error of the experimental data involved. This important fact must always be taken into consideration while carrying out experimental studies (especially in the future, as the accuracy of experimental investigations rises).

In conclusion it should be noted that the application of various thermodynamic regularities has made it possible to elaborate various methods of introducing corrections to any

---

* We can see that the properties of this non-thermodynamic scale are but again "tied" to the properties of a concrete thermometric substance, platinum.

** In accordance with the statute for the International Temperature Scale of 1968, this scale is established by means of a platinum resistance thermometer for a somewhat different temperature interval, from —259.34 °C (triple point of hydrogen) to 630.74 °C. At temperatures from 630.74 °C to 1064.43 °C (freezing point of gold) the International Temperature Scale is based on the readings of a platinum rhodium-platinum (Pt/Rh-Pt) thermocouple, and at higher temperatures the scale is extrapolated using an optical pyrometer. At temperatures below the hydrogen triple point the establishment of the temperature scale is more involved.

empirical temperature scale, so as to reduce them to the thermodynamic scale, i.e. to establish a thermodynamic scale based on this or another empirical scale (for instance, on the scale of a gas-filled thermometer).

3.6 Entropy

Let us turn now to consider some essential properties of reversible cycles. The thermal efficiency of a reversible Carnot cycle is found from the relationship

$$\eta = \frac{T_1 - T_2}{T_1}.$$

In the most general form, by definition, the thermal efficiency of any cycle

$$\eta = \frac{Q_1 - Q_2}{Q_1},$$

from which it follows that for a reversible Carnot cycle

$$\frac{T_1 - T_2}{T_1} = \frac{Q_1 - Q_2}{Q_1} \tag{3.107}$$

or, which is the same,

$$\frac{Q_1}{T_1} = \frac{Q_2}{T_2} \tag{3.108}$$

In the general form Eq. (3.108) becomes*

$$\frac{Q_1}{T_1} + \frac{Q_2}{T_2} = 0. \tag{3.109}$$

Equation (3.109) can be presented in the form

$$\sum \frac{Q}{T} = 0. \tag{3.110}$$

Consider an arbitrary reversible cycle. It will be recalled that to accomplish an arbitrary reversible cycle an infinite number of heat sources must be available. It will also be recalled that, as it was made clear in Sec. 3.4, any reversible cycle can be visualized as consisting of a multitude of elementary Carnot cycles (Fig. 3.8), each of which is associated with a high-temperature source from which it receives heat ΔQ_1 and with a low-temperature source to which it transfers heat ΔQ_2. With account taken of Eq. (3.109), we can write for each of these elementary cycles (denote their total number by n):

1st cycle $$\frac{\Delta Q_1^{(1)}}{T_1^{(1)}} + \frac{\Delta Q_2^{(1)}}{T_2^{(1)}} = 0,$$

2nd cycle $$\frac{\Delta Q_1^{(2)}}{T_1^{(2)}} + \frac{\Delta Q_2^{(2)}}{T_2^{(2)}} = 0,$$

$$\cdots\cdots\cdots\cdots$$

nth cycle $$\frac{\Delta Q_1^{(n)}}{T_1^{(n)}} + \frac{\Delta Q_2^{(n)}}{T_1^{(n)}} = 0.$$

* It should be noted that the sign for Q is chosen arbitrarily. For instance, in a forward cycle performing work, in relation to the working medium Q_2 should have a minus sign (since heat is removed from the working medium), and in relation to the low-temperature source a plus sign is proper (since Q_2 is added to the heat source).

Adding these relations, we obtain:

$$\sum_{i=1}^{n} \frac{\Delta Q_1^{(i)}}{T_1^{(i)}} + \sum_{i=1}^{n} \frac{\Delta Q_2^{(i)}}{T_2^{(i)}} = 0 \tag{3.111}$$

or, by analogy with Eq. (3.110),

$$\sum_{i=1}^{n} \frac{\Delta Q}{T} = 0. \tag{3.112}$$

In the limit, if infinitely small cycles are considered,

$$\lim_{n \to \infty} \sum_{i=1}^{n} \frac{\Delta Q}{T} = \oint \frac{dQ}{T}, \tag{3.113}$$

whence, is accordance with Eq. (3.112), we obtain:

$$\oint \frac{\Delta Q}{T} = 0. \tag{3.114}$$

The integral in Eq. (3.114) is called the *Clausius integral*. Equation (3.114) shows that **for any reversible cycle the Clausius integral is equal to zero.**

Let us elucidate the properties of the integrand. Denote it by

$$dS = \frac{dQ}{T}. \tag{3.115}$$

Upon substitution, Eq. (3.114) reduces to

$$\oint dS = 0. \tag{3.116}$$

It can be readily shown that the magnitude of the integral along any closed path between two arbitrary states A and B as limits (Fig. 3.12) does not depend on the path of the process, but depends on the final states, i.e.

$$\int_{(AaB)} dS = \int_{(AbB)} dS = \ldots = \int_{A}^{B} dS = S_B - S_A. \tag{3.117}$$

Thus, the integrand S, similar to interval energy and enthalpy, is a function of state, and its magnitude is determined unambiguously by the properties (parameters) of state. It will also be recalled that as it was mentioned in Sec. 2.4, the differential of a function of state is a total differential.

Heat (just as work) is a function of the process, and the amount of heat added to, or removed from, a system depends on the path of the process. Similar to any function of the process, the differential of the amount of heat, dQ, is not a total differential*. On the other hand, it follows from the foregoing that being multiplied by the quantity $1/T$, this differential dQ turns into a total differential $dS = dQ/T$. Thus, the quantity $1/T$ is an integrating factor for the differential of the amount of heat (it will be recalled that in mathematics by an integrating factor is meant a function μ such that after multiplication by this factor the quantity dX, which is not a total differential, turns into a total differential $dY = \mu\, dX$; it is known from mathematics that in the event of two variables, it is possible to find an integrating factor for any expression that is not a total differential.

* This is treated at greater length in Sec. 4.1.

The function S introduced by Clausius is called the *entropy*.

Entropy is an extensive property and, similar to other extensive quantities, it possesses the property of additivity. The quantity

$$s = \frac{S}{G}, \tag{3.118}$$

is referred to as specific entropy, and is defined as the entropy of a unit mass of substance.

Just like any other function of state, the specific entropy of a system can be presented as a function of any two properties of state, x and y:

$$s = f(x, y), \tag{3.119}$$

where p and v, p and T, etc., can be present as x and y.

Fig. 3.12

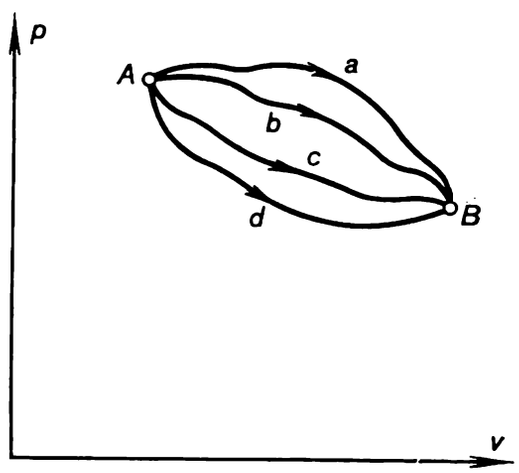

The methods used to calculate the entropy of a substance with the aid of other thermal quantities will be treated in detail in Chapters 4 and 6.

The definition of entropy (3.115) makes it clear that entropy is measured in units of heat divided by temperature. The most commonly used units of entropy are J/K and kcal/K.

The units of specific entropy are J/(kg-K), kJ/(kg-K), kcal/(kg-K), etc. Thus, the unit of measurement of entropy coincides with that of heat capacity. For a pure substance and for a mixture of substances not reacting chemically with each other the zero for entropy can be chosen arbitrarily, just as the zero for internal energy. In considering various thermodynamic processes, we will be interested in the change of the entropy involved in these processes, i.e. the difference between the entropies at the initial and final points of the processes, which, naturally, depends in no way on the entropy zero point.

It is clear from definition (3.115) that in various reversible processes the entropy of a system can either increase or diminish: inasmuch as temperature T is always positive, from equation (3.115) it follows that when heat is added to the system ($dQ > 0$), its entropy increases ($dS > 0$), and when heat is removed from the system ($dQ < 0$), its entropy decreases ($dS < 0$). It follows from Eq. (3.115) that when in a reversible process a body undergoes a change from the initial state 1 to the final state 2, the entropy of the body

changes by

$$S_2 - S_1 = \int_1^2 \frac{dQ}{T}. \tag{3.120}$$

Calculate, for example, the change in the entropy of 10 kg of water heated from a temperature of $T_1 = 20\,°C$ to a temperature $T_2 = 60\,°C$ at atmospheric pressure; in this temperature interval the heat capacity of water is assumed at first approximation to be independent of temperature and equal to 4.19 kJ/(kg-K), [or 1 kcal/(kg-K)]. Since

$$dQ = Gc_p dT,$$

we take G and c_p out of the integral, and from Eq. (3.120) we get:

$$S_2 - S_1 = Gc_p \ln \frac{T_2}{T_1},$$

or

$$S_2 - S_1 = 10 \times 4.19 \ln \frac{60+273.15}{20+273.15} = 5.40 \text{ kJ/K } (1.29 \text{ kcal/K}).$$

One important fact should be specially emphasized. The concept of entropy was introduced by investigating reversible cycles. This would seem to make it impossible to investigate the concept of entropy in the analysis of irreversible processes. But it must be borne in mind that entropy is a function of state and, consequently, the change of entropy in any process is only defined by the final and initial states.

The concept of entropy permits the introduction of the temperature-entropy chart, or diagram, in which entropy is plotted along the abscissa, and absolute temperature along the ordinate (Fig. 3.13). This chart facilitates to a great extent the analysis of heat engines. Let us plot the curve (path) of an arbitrary process on the T-S diagram.

From Eq. (3.115) it follows that in a reversible process

$$dQ = T\,dS. \tag{3.121}$$

The amount of heat added to a system (or removed from it) in a reversible process between the states I and II is:

$$Q_{\text{I-II}} = \int_{S_{\text{I}}}^{S_{\text{II}}} T\,dS. \tag{3.122}$$

It is clear that the amount of heat received (rejected) by a system in a reversible process will be represented on the T-S diagram by the area under the path of the process. Fig. 3.14 shows a reversible cycle of a heat engine on a T-S diagram. The amount of heat Q_1 added to the working medium in the cycle is represented by the area under the curve ABC, and the amount of heat Q_2 removed from the working medium is represented by the area under the curve CDA. The work done by the working medium in the cycle, $L_c = Q_1 - Q_2$, is represented on the diagram by the area confined by the closed curve $ABCDA$.

The T-S diagram is convenient since it gives a visual presentation of the amount of heat added and removed (rejected) in a cycle and the work obtained due to the accomplished cycle (or the work expended if a reverse cycle is involved). The T-S diagram also shows where in the process heat is added

to the working body and where heat is removed from it: the process of reversible addition of heat is characterized by an increase in entropy, and the process of heat removal by a decrease.

An isothermal process is evidently represented on the T-S diagram by a horizontal straight line.

It follows from Eq. (3.122) that in the isothermal process *II-I*

$$Q_{\text{I-II}} = T\,(S_{\text{II}} - S_{\text{I}}).$$

It is clear from equation

$$dS = \frac{dQ}{T}$$

Fig. 3.13

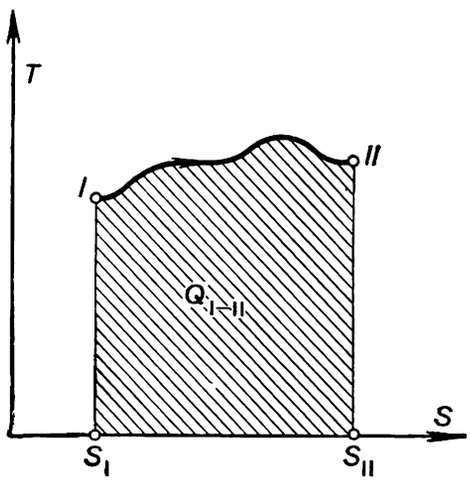

Fig. 3.14

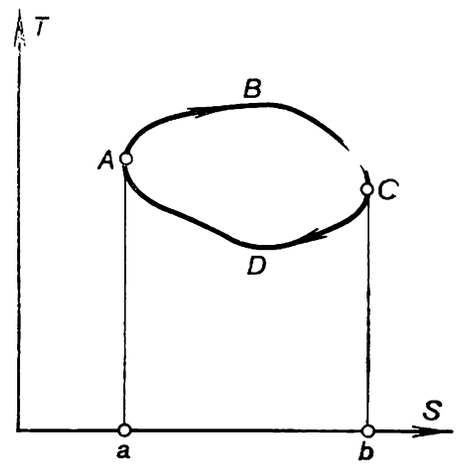

that in a reversible adiabatic process ($dQ = 0$)

$$dS = 0, \tag{3.123}$$

or

$$S = \text{const}. \tag{3.124}$$

That is why *reversible adiabatic processes* are also referred to as *isentropic*, and the path of such a process is called an *isentropic*, which in the T-S diagram is represented by a vertical line.

It ought to be noted that in the T-S diagram, just as in any other thermodynamic diagram of state, only reversible equilibrium processes can be plotted.

A reversible Carnot cycle is represented on the T-S diagram by the rectangle *1-2-3-4-1* (Fig. 3.15), bounded by isotherms *1-2* (T_1 = const) and *3-4* (T_2 = const) and by reversible adiabats *2-3* (S_2 = const) and *4-1* (S_1 = = const).

The amount of heat added in this cycle to the working medium from the high-temperature heat source,

$$Q_1 = T_1\,(S_2 - S_1), \tag{3.125}$$

is represented on the diagram by rectangle *1-2-*S_2*-*S_1*-1*; the amount of heat transferred to the low-temperature source,

$$Q_2 = T_2\,(S_2 - S_1), \tag{3.126}$$

by the rectangle *3-S_2-S_1-4-3*; and the work output of the cycle,

$$L_c = Q_1 - Q_2,$$

is represented by rectangle *1-2-3-4-1*.

From the general expression for the thermal efficiency of a cycle,

$$\eta = \frac{Q_1 - Q_2}{Q_1},$$

and with account taken of Eqs. (3.125) and (3.126), for a reversible Carnot cycle we obtain:

$$\eta^{\text{r.c.c.}} = \frac{T_1(S_1 - S_2) - T_2(S_1 - S_2)}{T_1(S_1 - S_2)}.$$

Fig. 3.15

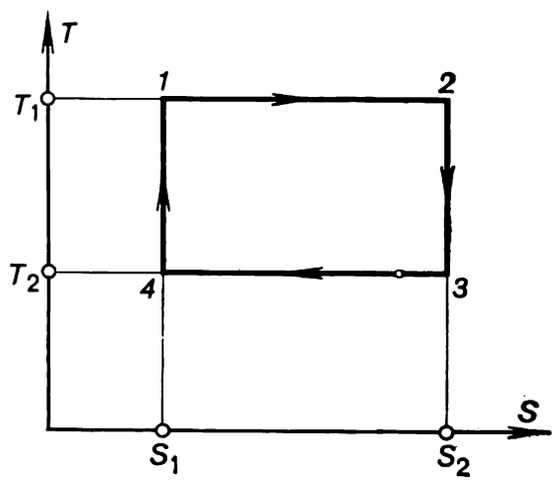

or, which is the same,

$$\eta^{\text{r.c.c.}} = \frac{T_1 - T_2}{T_1},$$

which coincides with Eq. (3.32), as was to be expected.

The *T-S* diagram has made it possible to prove easily the validity of the following statement:

The thermal efficiency of any reversible cycle realized between more than two heat sources is less than the efficiency of a reversible Carnot cycle realized between the same limiting temperatures.

Compare the arbitrary reversible cycle *I* with the Carnot cycle *II* that operates in the same temperature interval of cycle *I* (Fig. 3.16). Plot the Carnot cycle *1-2-3-4* around cycle *I*, and give the Carnot cycle the name *III*. Then

$$\eta^{\text{II}} = \eta^{\text{III}} = \frac{T_1 - T_2}{T_1} = \frac{Q_1 - Q_2}{Q_1} = 1 - \frac{b}{a+b+c+d+e+f}, \tag{3.127}$$

$$\eta^{\text{I}} = \frac{Q_1^{\text{I}} - Q_2^{\text{I}}}{Q_1^{\text{I}}} = 1 - \frac{b+e+f}{a+b+e+f}, \tag{3.128}$$

whence it follows that

$$\eta^{\text{II}} > \eta^{\text{I}}. \tag{3.129}$$

Thus, within a given temperature interval the thermal efficiency of a reversible Carnot cycle is greater than the thermal efficiency of any other reversible cycle. The reversible Carnot cycle is, consequently, a kind of a standard, enabling to determine the effectiveness of any other cycle ope-

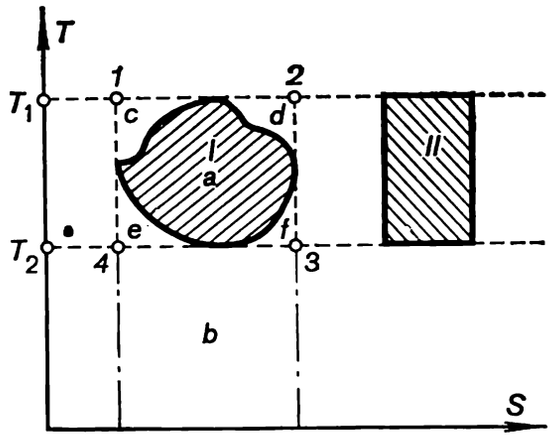

Fig. 3.16

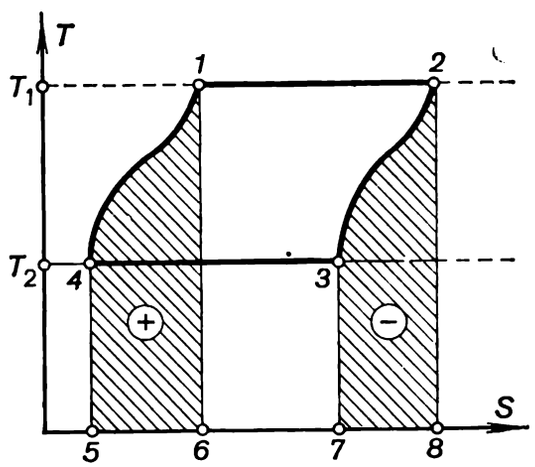

Fig. 3.17

rated in the same temperature interval, by comparing the thermal efficiency of this cycle with that of the Carnot cycle. This is the special importance of Carnot cycle, distinguishing it among any other cycles of heat engines.

The greater any arbitrary cycle fills the rectangle representing the reversible Carnot cycle, operated in the same temperature interval and in the same interval of entropies (as it is said, the higher the *cycle-filling coefficient* or the *area ratio* of a cycle), the higher the thermal efficiency of this arbitrary reversible cycle is. The cycle of any heat engine should be organized so that the area ratio of this cycle is as large as possible.

Let us turn now to the analysis of one more important variety of cycles of heat engines. Consider the reversible cycle, represented on the *T-S* diagram in Fig. 3.17 and consisting of two isotherms and two arbitrary equidistant curves.

The curves *4-1* and *2-3* are equidistant, and to accomplish the reversible processes corresponding to these curves there should be available an infinitely large number of heat sources.

During the process *2-3* heat is removed from the working medium (—) in an amount determined by the area *2-8-7-3-2* and equal to the heat added to the working medium during the process *4-1* and determined by the equal area *1-6-5-4-1*. The heat sources can be replaced by so-called regenerators, which during the process *6-1* reject the amount of heat (and at the same temperatures) returning to them from the working medium during the process *2-3*. The cycle results in that each of the infinitely large number of heat regenerators neither rejects nor receives heat on the whole. The heat added to the working medium in the cycle, $Q_1 = T_1 (S_2 - S_1)$, is represented by the area *1-2-8-6-1*, and the heat rejected in the cycle, $Q_2 = T_2 (S_3 - S_4)$, by the area *3-7-6-5-4-3*. In consequence of the curves *4-1* and *3-2* being equidistant,

$$S_2 - S_1 = S_3 - S_4,$$

whence

$$\eta = \frac{T_1 - T_2}{T_1} = \eta^{\text{r.c.c.}}.$$

The cycle considered above is known as the cycle with complete regeneration of heat, or the *regenerative cycle*. The regenerator effectiveness, determined by the ratio of the area (+) to the area (—), is equal to unity in this cycle, with a regenerator effectiveness less than unity the cycle is said to be a cycle with incomplete regeneration. An increase in the regenerator effectiveness brings this cycle closer to the Carnot cycle, and in the limit, as it can be seen from the case considered, $\eta = \eta^{\text{r.c.c.}}$.

Thus, the thermal efficiency of any reversible cycle, accomplished between two heat sources (i.e. a regenerative cycle), is equal to the thermal efficiency of the reversible Carnot cycle operated in the same temperature interval.

Incomplete heat regeneration also increases the thermal efficiency of any (both reversible and irreversible) cycles, since regeneration always increases the area ratio of a cycle.

3.7 Change of entropy in irreversible processes

So far we have been considering the change of entropy only in reversible processes. Let us turn now to the problem associated with the change of entropy in irreversible processes and, in particular, in irreversible processes proceeding in an isolated system, which are of the greatest interest. *Isolated* is the name given to a system with a rigid boundary with ideal heat insulation. The ideal heat insulation prevents any heat exchange between the system and the surroundings ($dQ_{\text{sys}} = 0$), and the rigid boundary protects the system against any exchange of expansion work with the surroundings. Since $dQ_{\text{sys}} = 0$ and $p\, dV_{\text{sys}} = 0$, it is clear from Eq. (2-37a) that $dU_{\text{sys}} = 0$, i.e. $U_{\text{sys}} = \text{const}$. The analysis of the processes proceeding in an isolated system is of interest mostly because in the limit any non-isolated system and its surroundings can be treated as an integral isolated system.

Inasmuch as for an isolated system $dQ_{\text{sys}} = 0$, any process proceeding in such a system is an adiabatic process for the system as a whole.

Consider an isolated system comprising two bodies at different temperatures T_1 and T_2 with $T_1 > T_2$. Heat transfer will take place between these bodies of the system, heat will flow from the body at the higher temperature

T_1 to the body at the lower temperature T_2. If an amount of heat dQ flows from the first body to the second, consequently, in accordance with Eq. (3.115), the entropy of the first body will be reduced by

$$dS_1 = -\frac{dQ}{T_1}, \tag{3.130}$$

and the entropy of the second body will increase by

$$dS_2 = \frac{dQ}{T_2}. \tag{3.131}$$

It is clear that the total change in the entropy of the entire system is

$$dS_{\text{sys}} = dQ\left(\frac{1}{T_2} - \frac{1}{T_1}\right). \tag{3.132}$$

Since

$$T_2 < T_1,$$

we have

$$dS_{\text{sys}} > 0, \tag{3.133}$$

i.e. an irreversible process results in an increase in the entropy of an isolated system.

If the process of heat transfer between the component parts of the system was reversible (it will be recalled that the condition for the reversibility of a process is an infinitesimal temperature difference $T_1 - T_2 = dT$), the entropy of the first body would diminish by

$$dS_1 = -\frac{dQ}{T_1},$$

and the entropy of the second body would increase by

$$dS_2 = \frac{dQ}{T_1 - dT},$$

so that for the system as a whole the change in entropy would be negligibly small:

$$dS_{\text{sys}} = dQ\left(\frac{1}{T_1 - dT} - \frac{1}{T_1}\right) \cong dQ\frac{dT}{T_1^2} \cong 0. \tag{3.134}$$

Another method of reversible heat transfer from a body at a higher temperature to a body at a lower temperature involves, as already mentioned, the Carnot cycle. To realize any irreversible cycle, a system consisting of three elements out of equilibrium—a high-temperature heat source, a low-temperature heat sink, and a working medium—must be available. If during one cycle heat Q_1 is removed from the high-temperature heat source (at temperature T_1) and heat Q_2 is added to the low-temperature heat sink (at temperature T_2), the entropy of the high-temperature heat source will diminish by

$$\Delta S_{\text{h.t.}} = -\frac{Q_1}{T_1}, \tag{3.135}$$

and the entropy of the low-temperature sink will increase by

$$\Delta S_{\text{l.t.}} = \frac{Q_2}{T_2}. \tag{3.136}$$

As regards the entropy of the working medium, since upon completion of the cycle the working medium returns into its initial state, its entropy does not change:

$$\Delta S_{\text{w.m.}} = 0. \tag{3.137}$$

Hence, after a system undergoes a cycle the change in the entropy of the system considered is equal to

$$\Delta S_{\text{sys}} = \Delta S_{\text{h.t.}} + \Delta S_{\text{w.m.}} + \Delta S_{\text{l.t.}} = \frac{Q_2}{T_2} - \frac{Q_1}{T_1}. \tag{3.138}$$

Equation (3.138) is true for any reversible and irreversible cycles operated between two heat sources (a source and a sink).

As was shown above, for a reversible Carnot cycle,

$$\frac{Q_2}{T_2} - \frac{Q_1}{T_1} = 0.$$

Hence, if a reversible Carnot cycle is realized in a system (or any other cycle is accomplished between a heat source and a heat sink), the entropy of the system does not change:

$$\Delta S_{\text{sys}} = 0. \tag{3.139}$$

The same conclusion can be drawn for reversible cycles realized between any number of heat sources.

But if a system undergoes an arbitrary irreversible cycle, the entropy of the system will change without fail. The thermal efficiency of any irreversible cycle, $\eta^{\text{ir.c.}}$, has been shown above to be less than the thermal efficiency of a reversible Carnot cycle, $\eta^{\text{r.C.c.}}$, realized between the same heat sources.

Bearing in mind that for a reversible Carnot cycle

$$\eta^{\text{r.C.c.}} = \frac{T_1 - T_2}{T_1}$$

and, in accordance with the general definition for irreversible cycle:

$$\eta^{\text{ir.c.}} = \frac{Q_1 - Q_2}{Q_1},$$

the inequality

$$\eta^{\text{ir.c.}} < \eta^{\text{r.C.c.}}$$

can be presented in the following form:

$$\frac{Q_1 - Q_2}{Q_1} < \frac{T_1 - T_2}{T_1}, \tag{3.140}$$

whence it follows that for an irreversible cycle

$$\frac{Q_2}{T_2} > \frac{Q_1}{T_1} \tag{3.141}$$

(here the temperatures refer not to the working medium but to the heat sources). Hence, if an irreversible process is accomplished between two heat sources, the entropy of the system increases:

$$\Delta S_{\text{sys}} > 0. \tag{3.142}$$

The same conclusion is true for irreversible cycles realized between any other number of heat sources.

The increase in the system's entropy is associated with the fact that the entropy of the working medium does not change during the cycle, and the drop in the entropy of the high-temperature sources is less than the increase in the entropy of the low-temperature sources. Thus, an irreversible cycle results in an increase in the entropy of an isolated system.

This conclusion can be proved in the most general form in the following manner. The inequality (3.141), which is true for an irreversible Carnot cycle, as well as for any irreversible cycle, can be presented in the following form:

$$\frac{Q_1}{T_1}-\frac{Q_2}{T_2}<0$$

or, which is the same,

$$\sum \frac{Q}{T}<0. \tag{3.143}$$

Considering the irreversible cycle as a totality of an infinite number, n, of irreversible elementary Carnot cycles and taking into account that

$$\lim_{n\to\infty}\sum_{i=1}^{n}\frac{\Delta Q}{T}=\oint\frac{dQ}{T},$$

we obtain [see Eq. (3.143)]:

$$\oint\frac{dQ}{T}<0. \tag{3.144}$$

Thus, for an arbitrary irreversible cycle the Clausius integral is always negative.

It should be stressed that this integral pertains to the work done by the system (high-temperature source—working medium—low-temperature heat sink) as a whole. As regards the working medium, its entropy does not change, inasmuch as upon completion of the cycle the working medium returns into its initial state, as was already mentioned above. In other words, for the working medium Eq. (3.116),

$$\oint dS = 0,$$

or, which is the same, the equation

$$\oint\frac{dQ}{T}=0$$

is always true.

A question may arise whether there is any contradiction here. Indeed, on one hand, the Clausius integral was shown to be always negative in an irreversible cycle [Eq. (3.144)]; on the other hand, according to Eq. (3.114) this integral is equal to zero. But there is no contradiction here. In Eq. (3.114) the integral refers to the working medium, and the quantity T, present in this equation, is the temperature of the working medium. As regards the Clausius integral present in Eq. (3.144), it pertains, as was already mentioned above, to the system as a whole and, as it is clear from the meaning of the conclusion [see Eq. (3.144)], the temperature present in this equation is the temperature of the heat source, which is not equal to the temperature of the working body in the event of an irreversible process.

Consider now an arbitrary irreversible cycle comprising two processes, an irreversible process *1-2* and a reversible process *2-1* (Fig. 3-18).

For the cycle considered, the Clausius integral can obviously be presented as the sum of two line integrals:

$$\oint \frac{dQ}{T} = \int_{(1-2)} \left(\frac{dQ}{T}\right)_{ir} + \int_{(2-1)} \left(\frac{dQ}{T}\right)_{r}, \tag{3.145}$$

whence with account taken of Eq. (3.144) it follows that

$$\int_{(1-2)} \left(\frac{dQ}{T}\right)_{ir} + \int_{(2-1)} \left(\frac{dQ}{T}\right)_{r} < 0. \tag{3.146}$$

Fig. 3.18

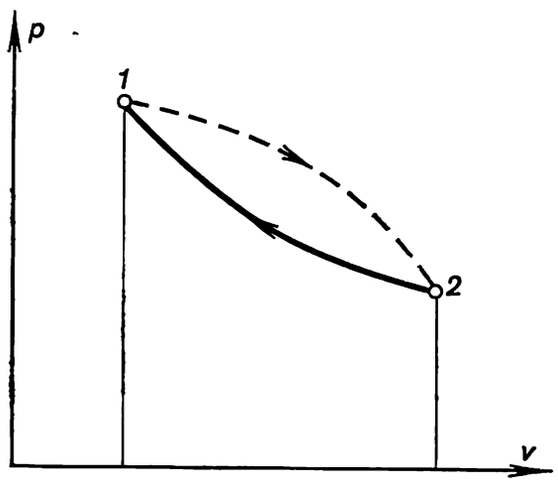

For the reversible process *2-1*, in accordance with Eqs. (3.115) and (3.117)

$$\int_{(2-1)} \left(\frac{dQ}{T}\right)_{r} = \int_{2}^{1} \frac{dQ}{T} = S_1 - S_2.$$

Substituting this expression in the inequality (3.146), we obtain for any irreversible process:

$$S_2 - S_1 > \int_{(1-2)} \left(\frac{dQ}{T}\right)_{ir}, \tag{3.147}$$

whence, in the differential form

$$dS > \frac{dQ}{T}; \tag{3.148}$$

it should be stressed once more that this relationship holds for any irreversible process proceeding in a system. Consequently, if a reversible process develops in an isolated system (for which, by definition, $dQ_{sys} = 0$), then according to Eq. (3.133),

$$dS_{sys} > 0.$$

The entropy of an isolated system increases as a result of irreversible processes developing in the system.

From the relationship (3.115)

$$dS = \frac{dQ}{T}$$

it follows that **if a reversible process takes place in an isolated system ($dQ_{sys} = 0$), the entropy of the system remains constant:**

$$dS_{sys} = 0.$$

No matter what processes proceed in an isolated system, entropy cannot decrease:

$$dS_{sys} \geqslant 0. \tag{3.149}$$

[In Eq. (3.149) the equality sign pertains to reversible and the inequality sign to irreversible processes.]

Hence, an important conclusion is drawn (already mentioned above, in Sec. 3.2) that after coming into a state of equilibrium an isolated system remains in this state, i.e. the system is incapable of a spontaneous change of state. Indeed, any spontaneous process is irreversible and, consequently, proceeds with an increase in entropy. The entropy of an isolated system, however, has a maximum value in the state of equilibrium. Consequently, spontaneous processes are impossible in an isolated equilibrium system.

Thus, spontaneous processes continue in an isolated system until the system's entropy reaches its maximum value. Upon reaching the state of equilibrium, for which the entropy is the maximum possible, the spontaneous processes in the system terminate, and the system stays in a state of equilibrium.

Equations (3.115) and (3.148) can be combined in the following form:

$$dS \geqslant \frac{dQ}{T}. \tag{3.150}$$

Relation (3.150), which is true both for reversible (the sign of equality) and irreversible (the sign of inequality) processes in any system, is the mathematical expression for the second law of thermodynamics. The inequality (3.149) is a particular case of the general inequality (3.150) written for an isolated system ($dQ_{sys} = 0$).

3.8 Combined mathematical statement of the first and second laws of thermodynamics

The second law of thermodynamics was shown in the preceding paragraph to be expressed as

$$dS \geqslant \frac{dQ}{T},$$

where the sign of equality refers to reversible and the sign of inequality to irreversible processes.

This equation can be written in the following form:

$$T\,dS \geqslant dQ, \tag{3.151}$$

and, respectively, for a unit mass of substance

$$T\,ds \geqslant dq. \tag{3.152}$$

It will be recalled that in accordance with the equation expressing the first law of thermodynamics,

$$dQ = dU + dL,$$

and for unit mass of substance,

$$dq = du + dl,$$

or, which is the same,

$$dQ = dU + p\,dV + dL^*,$$

and for unit mass of substance,

$$dq = du + p\,dv + dl^*.$$

Substituting the values of dQ and dq from these equations respectively in Eqs. (3.151) and (3.152), we get:

$$T\,dS \geqslant dU + dL, \tag{3.153}$$

or

$$T\,ds \geqslant du + dl, \tag{3.154}$$

and also

$$T\,dS \geqslant dU + p\,dV + dL^*, \tag{3.155}$$

or

$$T\,ds \geqslant du + p\,dv + dl^*. \tag{3.156}$$

The above relationships are referred to as the *combined mathematical statement of the first and second laws of thermodynamics.*

If the only kind of work done by a system is the work of expansion, Eqs. (3.155) and (3.156) take the form

$$T\,dS \geqslant dU + p\,dV \tag{3.157}$$

and

$$T\,ds \geqslant du + p\,dv. \tag{3.158}$$

Below in the text, these equations will be used mainly with systems in equilibrium, for which the combined equations of the first and second laws of thermodynamics take the following form:

$$T\,dS = dU + p\,dV \tag{3.159}$$

and

$$T\,ds = du + p\,dv. \tag{3.160}$$

3.9 Entropy and thermodynamic probability

The physical meaning of entropy is of great interest. The greatest credit for elucidating this problem must be given to L. Boltzmann, who found that the magnitude of the entropy of a substance in a given state and the thermodynamic probability of this state are related unambiguously. Let us dwell at some length on this problem, beginning with a brief description of the con-

cepts of mathematical probability and thermodynamic probability of state.

Mathematical probability, or *mathematical expectation*, is defined as the ratio of the number of favourable events to the number of equally possible events. Let us consider the following example. Assume that there are 20 balls in a box, 10 black and 10 red. Also assume that the probability of drawing from the box any one of the 20 balls is the same. In the terms of probability theory this means that by drawing one ball from the box we have at our disposal 20 equally likely events. The question is: What is the mathematical probability that a red ball will be drawn from the box? Since out of the 20 balls kept in the box 10 are red and since having drawn any of the red balls the initial requirement is fulfilled, it is clear that we are confronted with 10 equally possible events. Then, according to the definition of mathematical probability, the probability that a red ball will be drawn from the box is

$$W_r = \frac{10}{20} = 0.5.$$

It should be noted that the mathematical probability is always a proper fraction, since the number of favourable events is always less than the total number of equally possible events. If the number of favourable events is equal to the number of the equally possible events, the event is said to be certain and characterized by $W_r = 1$.

Let us examine further the example with the box and balls. Assume that of the 10 red balls 5 balls have a band. Now the following question arises: What is the mathematical possibility of a red ball with a band being drawn from the box containing the balls?

This rather simple problem can be solved in different ways. It is possible, firstly, to determine the number of favourable events and, thereby, the unknown mathematical probability. The number of equally possible events is evidently equal, as above, to the total number of balls in the box, i.e. to 20, and the number of favourable events is equal to the number of red balls with a band, i.e. to 5. Then the probability of drawing a red ball with a band from the box is

$$W_{r.b.} = \frac{5}{20} = 0.25.$$

But another method of solution is also possible. First, the possibility of drawing a red ball from the box is determined. This problem was already solved:

$$W_r = \frac{10}{20} = 0.5.$$

Further, we determine the probability that the ball drawn from the box has a band, with the number of equally possible events being equal to the number of red balls, i.e. to 10, and the number of favourable events being equal to the number of red balls with a band, i.e. to 5. Consequently, the mathematical probability that the red ball drawn from box will happen to have a band is

$$W_b = \frac{5}{10} = 0.5.$$

Multiplying now the mathematical probability W_r and W_b, we can obtain the unknown mathematical probability $W_{r.b.}$:

$$W_{r.b.} = W_r W_b = 0.5 \times 0.5 = 0.25.$$

The example considered corroborates the general law of probability, according to which the mathematical probability of a complex event (in the example studied, the probability of a red ball with a band being drawn from the box) is equal to the product of the mathematical probabilities of the simple events (the probability of drawing a red ball from the box and the probability that the red ball drawn from the box will happen to be one of the red balls with a band) from which the complex event is composed.

The theory of probability permits the solution of many interesting problems. For illustration consider the following problem. Three riflemen A, B, and C fire a shot simultaneously. The marksmanship of the rifleman A is characterized on an average by four hits out of five shots, the marksmanship of the rifleman B by three hits out of four shots, and the marksmanship of the rifleman C by two hits out of three shots. Determine the mathematical probability of the riflemen A and B making hits, and of C failing to hit.

First assume that the result of the shooting is not known. Determine, departing from this condition, the probability of the riflemen B and C making hits and the probability of the rifleman C failing to hit. On the basis of the conditions given and all that was said above it is clear that the mathematical probability of such a complex event must be equal to

$$W_A = \frac{3}{4} \times \frac{2}{3} \times \frac{1}{5} = \frac{6}{60}.$$

The mathematical probability that riflemen A and C will hit the mark and that the rifleman B will miss the mark will be

$$W_B = \frac{4}{5} \times \frac{2}{3} \times \frac{1}{4} = \frac{8}{60}.$$

And finally, the mathematical probability of the event in which the riflemen A and B will hit the mark and the rifleman C will miss it is

$$W_C = \frac{4}{5} \times \frac{3}{4} \times \frac{1}{3} = \frac{12}{60}.$$

Make use now of the initial condition, according to which after the salvo of the three riflemen A, B, and C only two punctures are detected in the target. From this condition it follows that the failure of one of the three riflemen to hit the mark is a certainty and, consequently, the event of all three riflemen hitting the mark is precluded. Denote by W'_C the mathematical probability of the riflemen A and B hitting the mark and the rifleman C fails to hit, on condition that the missing of one of the three riflemen is a certainty. The mathematical probability W'_C, which is the aim of the problem, will be as many times greater than W_C as unity is larger than the sum $(W_A + W_B + W_C)$, since the failing of one rifleman to hit is a certainty and the mathematical expectation of certainty is unity. Hence, the following is true:

$$\frac{W'_C}{W_C} = \frac{1}{W_A + W_B + W_C},$$

whence

$$W'_C = \frac{W_C}{W_A + W_B + W_C} = \frac{12/60}{6/60 + 8/60 + 12/60} = 6/13.$$

Consider now an example directly associated with thermodynamics. Assume that a vessel, mentally divided into two equal parts, accommodates

a molecule which is in random motion (Fig. 3.19). What is the mathematical probability that at the given moment of time the molecule will be positioned in the left-hand half of the vessel? Since the left- and right-hand parts of the vessel are of equal volume, the residence of the molecule at any point in the vessel is equally possible, and the mathematical expectation

$$W_1 = \frac{1}{2}.$$

If the vessel contained two molecules, instead of one, the mathematical probability of the event in which both molecules will be positioned in the same, for instance, the left-hand half of the vessel would be equal to

$$W_2 = \frac{1}{2} \times \frac{1}{2} = \left(\frac{1}{2}\right)^2.$$

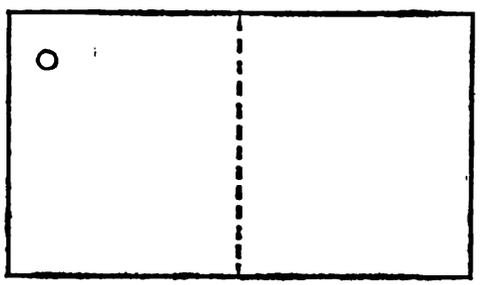

Fig. 3.19

By analogy, for three molecules we would have $W_3 = (1/2)^3$, for four molecules, $W_4 = (1/2)^4$. If there are N molecules in the vessel the mathematical probability of all the molecules being located in one half of the vessel is $W_N = (1/2)^N$. Since N is always a very large number, the mathematical probability W_N will be negligibly small* and, consequently, the probability of a spontaneous increase in pressure in one of the two halves of the vessel is very low.

The last example is very instructive. As was mentioned in Sec. 3.3, one of the general statements of the second law of thermodynamics runs as follows: spontaneous processes are irreversible. From this statement it follows that processes that proceed "by themselves", and among them the diffusion of gases, the flow of heat from a body with a higher temperature to a body with a lower temperature at a finite temperature difference, the expansion of a gas without the performance of external work, etc., are irreversible processes. In fact, it is common knowledge that the process of separation of a gas mixture (the process reverse to diffusion) never proceeds "by itself", i.e. the process never develops without supplementary, compensating processes; it is highly improbable that air confined in a vessel would, due to some event, spontaneously separate into nitrogen and oxygen. Processes of spontaneous heat flow from a body at a lower temperature to a body at a high-

* It will be recalled that one kilomole of gas contains 6×10^{26} molecules (Avogadro's number N_A). Hence, the mathematical probability that these molecules will concentrate in one half of the confining volume is negligibly small:

$$W_N = \left(\frac{1}{2}\right)^{N_A} = 10^{N_A \log 1/} \cong 10^{-1.8\times10^{26}}.$$

er temperature or spontaneous compression of a gas also seem improbable.

It was shown above that an irreversible process proceeding in an isolated system results in an increase in the system's entropy. If it proved possible to reverse an irreversible process, entropy would have diminished: but, as is known, this is practically impossible.

The mathematical probability of a spontaneous process proceeding in the direction of decreasing entropy of the isolated system considered is so small that in practice processes of this kind never realize "by themselves". This was made sure by determining the mathematical probability of the spontaneous compression of a gas.

Thus, an assumption can be suggested by which entropy and probability are interrelated. Further on we shall not only be convinced in the validity of such an assumption but shall also determine the nature of this bond.

Before becoming concerned with that problem, however, we should become familiar with the concepts of the macroscopic and microscopic states and of the thermodynamic probability of state.

The macroscopic state of a system or the *macrostate* is determined by the thermodynamic properties, or parameters, of the system: pressure, temperature, specific volume, internal energy, etc. Since to determine all properties of a system consisting of a pure substance it is sufficient to know, in principle, any two of the properties, the macroscopic state of a system is fully determined by any two thermodynamic properties, v and u, for instance. Consequently, speaking about the thermodynamic state of a system, or simply the state of a system, we had in mind the macrostate.

The microscopic state of a system or the *microstate* is determined by the totality of properties determining the state of each molecule of the system: velocity, position, etc. It would, consequently, be wrong to conceive the microstate as the state of only one molecule. It must be stated once more that the microstate is determined by the totality of properties of all molecules of a system.

It can be easily shown that for one and the same macrostate of a system there may be a rather large number of microstates. Consider a simple example. Let there be available a system which is a gas confined in a vessel of constant volume. Assume that, as was stated above, the macrostate of the system is determined by its volume v and internal energy u. But the constancy of the internal energy of the system does not specify as yet the distribution of energy among individual molecules, i.e. a definite microstate. Indeed, for the given macrostate there may exist a microstate in which all molecules of the system have the same amount of energy equal to the internal energy of the system. But for the same macrostate there may also exist other microstates. It can be assumed, for instance, that one half of the molecules possesses twice as much energy as the other half; but if all molecules are intermixed properly and their total energy is equal, as before, to the internal energy of the system, then this new microstate will correspond to the same macrostate.

Thus, proceeding only from the distribution of energy between individual molecules, one and the same macrostate can be shown to correspond to an enormous number of microstates, bearing in mind that the difference between microstates is not always due to the different distribution of energy among the molecules. The difference between the microstates can also be traced to other factors, for instance, to the distribution of molecules in space and also

to the difference in the velocities of molecules with respect to magnitude and direction. It should also be noted that the invariability of a macrostate determines in no way the invariability of a microstate. As a result of the chaotic motion of molecules and the continuous collisions between them, for each moment of time there is a definite distribution of energy among the molecules and, consequently, a definite microstate. And since not one of the microstates has any advantages over another microstate, a continuous change of microstates takes place. In principle, of course, it is possible that a microstate corresponding to a new macrostate different from the preceding one may set in. For instance, a case is possible (at least in principle) when molecules of greater energies concentrate in one half of the vessel, and molecules with lower energies concentrate in the other half of the vessel. As a result we would have a new macrostate in which a fraction of the gas would be at a higher temperature than the other.

It should not be thought that as a result of the continuous change of microstates a system (for instance, a gas in a vessel) must necessarily undergo a change in macrostates. One of the macrostates usually has a rather large number of microstates which realize exactly this macrostate. It would, therefore, seem to an outside observer having an opportunity to determine the change of only thermodynamic properties that the state of the system does not change.

Let us now turn to the concept of the thermodynamic probability of the state of a system. The term *thermodynamic probability* or *statistical weight of a macrostate*, is the name given to the number of microstates corresponding to a given macrostate.

As distinguished from mathematical probability, which is always expressed by a proper fraction, the thermodynamic probability is expressed by a whole, usually very large, number.

If an isolated system undergoes a spontaneous process resulting in a change of the macrostate of the system, this indicates that the new macrostate has a greater number of corresponding microstates than preceding macrostate. It is, therefore, clear that a spontaneous process results in an increase in the thermodynamic probability of a system. It was from this point of view that Boltzmann gave his statement of the second law of thermodynamics:

Nature tends from less probable states to more probable states.

The increase of the entropy of an isolated system undergoing a spontaneous irreversible process and the simultaneous increase of the thermodynamic probability of state of the system grounds to believing that entropy and thermodynamic probability are interrelated:

$$S = \varphi(W).$$

To determine the relation between entropy and thermodynamic probability, proceed as follows.

Let there be two systems with entropies S_1 and S_2 and thermodynamic probabilities W_1 and W_2, respectively. Let the two systems form a new system with entropy S and thermodynamic probability W. Entropy, just as all caloric properties, possesses the property of additivity, whence it follows that

$$S = S_1 + S_2. \tag{3.161}$$

But the thermodynamic probability of the total system is

$$W = W_1 W_2. \tag{3.162}$$

Equation (3.162) follows from the fact that each microstate of one of the component systems forms together with any microstate of the other system a microstate of the total system. The number of possible microstates of the total system, forming one and the same macrostate of that system, i.e. its thermodynamic probability, will be equal to the number of all possible combinations, i.e. products of the thermodynamic probabilities of the two systems.

Since one and the same functional dependence relates the entropy of each system with its thermodynamic probability: $S_1 = \varphi(W_1)$, $S_2 = \varphi(W_2)$, $S = \varphi(W)$, the following equation is true:

$$\varphi(W_1W_2) = \varphi(W_1) + \varphi(W_2). \tag{3.163}$$

Differentiating Eq. (3.163) with respect to W_1, we obtain:

$$\varphi'(W_1W_2)\,W_2 = \varphi'(W_1),$$

and differentiating with respect to W_2, we get:

$$\varphi''(W_1W_2)\,W_1W_2 + \varphi'(W_1W_2) = 0$$

or, taking into account that $W_1W_2 = W$,

$$\varphi''(W)\,W + \varphi'(W) = 0.$$

We have derived a differential equation of the second order. The solution presents no great difficulties. It is known that

$$\varphi''(W) = \frac{d\varphi'(W)}{dW},$$

hence, this differential equation can be presented in the form

$$\frac{d\varphi'(W)}{dW}\,W + \varphi'(W) = 0 \quad \text{or} \quad \frac{d\varphi'(W)}{\varphi'(W)} + \frac{dW}{W} = 0.$$

Integrating this expression, we obtain:

$$\ln\varphi'(W) + \ln(W) = \text{const}.$$

Taking antilogarithms, we get:

$$\varphi'(W)W = k.$$

But

$$\varphi'(W) = \frac{d\varphi(W)}{dW}$$

and, consequently, the above relation reduces to

$$\frac{d\varphi(W)}{dW}\,W = k,$$

or

$$d\varphi(W) = k\,\frac{dW}{W}.$$

Upon integration we obtain:

$$\varphi(W) = k\ln W + k_1.$$

Since $\varphi(W) = S$, we can write

$$S = k\ln W + k_1. \tag{3.164}$$

One of the constants in the above equation, k_1, can be determined immediately. Taking into account that $S = S_1 + S_2$ and $W = W_1W_2$, we can write

$$k \ln W_1W_2 + k_1 = k \ln W_1 + k_1 + k \ln W_2 + k_1,$$

from which it follows that $k_1 = 0$. Thus we finally get:

$$S = k \ln W. \tag{3.165}$$

To determine the constant k, intricate calculations based on quantum statistics are required. It is impossible to repeat these calculations in this book. It will only be mentioned that after constant k was calculated it happened to be the already known Boltzmann's constant, i.e. the gas constant reduced to one molecule.

Let us again consider a vessel (Fig. 3.19) and imagine it to be separated into two parts and filled with a gas possessing the properties of an ideal, or perfect, gas. As regards the distribution of the molecules of this gas between the two halves of the vessel, it can be stated* that with the greatest degree of probability we can expect that the number of molecules in the left-hand part of the vessel is equal to the number of molecules in the right-hand part of the vessel. Actually, however, the event in which the number of molecules in the two parts of the vessel is the same will be rather rarely realized. The number of molecules in the left-hand part of the vessel, for instance, will change continuously due to the chaotic (random) motion of the molecules, and it will be equal to one half of the total number of molecules in the vessel only on the average.

In considering this example it ought to be borne in mind that the number of molecules in the left-hand part of the vessel will always be close to one half of the total number of molecules. That is why not being equal to the maximum probability of uniform distribution of molecules between the two equal parts of the vessel the probability of the actual distribution of the molecules between the two parts of the vessel will always be close to it.

The theory permits the deviation from the most probable state to be determined. The value of the deviation happens to obey the $\sqrt{N}$ law, which when applied to the event considered means the following.

Let there be but 200 molecules in the vessel. One half of it must contain 100 molecules on the average. The deviation from this average number of molecules will be

$$\Delta N = \pm \sqrt{N} = \pm \sqrt{100} = \pm 10.$$

This means that, as a rule, the deviation does not exceed 10% of the average value. The great percentage deviation is due to the fact that the vessel was assumed to contain a very small number of molecules.

If we assume that the vessel contains not 200 but 10 000 molecules, ΔN will be equal to ± 100 molecules, or 1%. But if there was 2×10^{20} molecules in the vessel (this is still much less than the number of molecules contained in one mole), the deviation would not exceed 10^{10} molecules, amounting to only 10^{-8}%. The deviation from the uniform distribution would then be practically imperceptible.

* It is assumed, of course, that the number of molecules is very great.

Assume that we have a gas which is absolutely isolated from its surroundings. The gas can then be considered as an absolutely isolated system. This closed system must eventually come into a state of equilibrium, with the entropy of the isolated system reaching a maximum value.

However, even in the case considered, there may be deviations from the state of equilibrium, the so-called *fluctuations*. As it follows from Eq. (3.165), the maximum value of entropy corresponds to the maximum value of thermodynamic probability. It is, therefore, obvious that all states realized due to fluctuations must differ from the equilibrium state both in a smaller value of the entropy and in a smaller value of the thermodynamic probability. Each such state will be the sooner realized the closer its thermodynamic probability is to the thermodynamic probability of the equilibrium state.

The relative value of possible fluctuations is the greater the smaller the size of the system considered. This can be substantiated convincingly if we consider the calculations made by physicists. Consider a small cube of 1 cm^3 in the surrounding atmosphere. What time will elapse before a spontaneous change due to fluctuations in air density by only 1 per cent takes place in this space? Calculations show that an observer would probably notice this phenomenon if the survey were conducted in the course of an enormously long period of time, 10^{140} years. But if the volume of the imagined cube of air is decreased many times and assumed equal to 0.008 of a cubic micron, the density of the air confined in this volume will change by 1 per cent very often, about 10^9 times per second.

Is it practically possible to observe the change in thermodynamic properties due to fluctuations?

From all that was said above a negative answer suggests itself, the validity of which can be proved by simple calculations. Denote by S_m and W_m respectively the entropy and the thermodynamic probability of an equilibrium state, and by S and W the entropy and the thermodynamic probability of the state reached due to fluctuations. It can, evidently, be written that

$$S_m - S = k \ln \frac{W_m}{W} = 2.303k \log \frac{W_m}{W},$$

whence it follows that

$$\frac{W_m}{W} = 10^{\frac{S_m - S}{2.303k}}.$$

Assume that it is as yet possible to determine a difference between system entropies, equal to 10^{-6} kcal/K.* Knowing that $k = 3.28 \times 10^{-27}$ kcal/K, we obtain:

$$\frac{W_m}{W} = 10^{\frac{10^{-6}}{2.303 \times 3.28 \times 10^{-27}}} > 10^{200}.$$

A deviation from the equilibrium state with so large a ratio of probabilities is scarcely probable, so that practical observation of it is impossible. This is the more true that even if the system would reach such a state, the residence time in this state would happen to be so short that no instrument could record it.

* Actually, it is impossible to determine so small a difference between entropies; the possible error is greater than the value to be determined.

Thus, a system in thermodynamic equilibrium continuously undergoes fluctuations from its equilibrium state. The magnitude of these fluctuations from the equilibrium state is so negligible that the practical observation of them is impossible. As regards the application of the fluctuations to engineering purposes, this also proves impossible, and not only from the practical but also from the theoretical point of view.

The statistical interpretation of the nature of entropy and of the second law of thermodynamics marked a new step in the explanation of the physical meaning of natural phenomena. Based on the statistical explanation of the second law of thermodynamics, Boltzmann proved that, in principle, no system can rest in the state of full equilibrium, since the system is always fluctuating.

The second law of thermodynamics is applicable only to macroscopic systems, or systems consisting of a very great number of particles. But the principle of increasing entropy in irreversible processes is only true for isolated macroscopic systems. The extention of the principle of increasing entropy to cover systems other than isolated macrosystems is in no way justified.

3.10 Reversibility and work

An isolated system is capable of performing work only when it is out of the state of full equilibrium. If chemical processes are ignored, then for an isolated system to perform work the pressures or temperatures of the various component bodies of the system must not be absolutely the same. A system comprising bodies at different pressures is not in mechanical equilibrium. If a system comprises bodies at different temperatures, there is no thermal equilibrium in the system. Only a non-equilibrium system is capable of producing work. As work is done, an isolated system will approach equilibrium state.

Consider, for instance, an isolated system consisting of a surrounding medium whose temperature and pressure remain practically constant and compressed air with the same temperature as the surroundings but at a higher pressure. Such a system is in thermal equilibrium, but it is said to be in a mechanically non-equilibrium state and thus can perform work. For instance, it can displace a piston in a cylinder until air pressure drops to the pressure of the surroundings, i.e. until the system comes into the state of mechanical equilibrium.

If a system comprises two heat sources at different temperatures and a working body whose initial state is immaterial, we are concerned with a thermally non-equilibrium system that is capable of performing work, for instance, when the working body repeatedly undergoes a Carnot cycle. Upon accomplishing the Carnot cycle not only a certain amount of work is done but also a certain amount of heat is transferred from the source of heat with a higher temperature to the source of heat with a lower temperature. But such heat flow will result in that the temperature of the high-temperature source decreases and the temperature of the low-temperature source will increase.* In the course of time the temperatures of the two heat sources

* If only the heat sources are not assumed to be infinitely large. From this assumption it follows that a finite amount of heat rejected from or added to the heat source does not change its temperature.

will become equal, the system shall reach thermal equilibrium and further performance of work will become impossible.

Thus, an isolated system can produce work as it passes from a non-equilibrium into an equilibrium state. The amount of work done depends, as is known, on the nature of the process that the system undergoes when passing into the equilibrium state.

Consequently, from the point of view of the amount of work done, the path taken by a system while passing from a non-equilibrium into an equilibrium state is of great importance.

Let us again assume that we have a thermally non-equilibrium system consisting of two heat sources at different temperatures and a working medium. We can visualize a case in which heat is transferred from the high-temperature source directly to the low-temperature source, by-passing the working medium. Such a process results in that over a certain period of time the temperatures of the system component bodies become equal, the system will happen to be in the state of thermal equilibrium, and no work whatsoever will be done.* Such mode of heat transfer (evening out of temperatures), proceeding without work being done, will necessarily occur at a finite temperature difference, i.e. the process will be irreversible. On the contrary, when the system passes from a thermally non-equilibrium state into an equilibrium state, maximum work can be produced as a result of the working medium undergoing repeatedly a Carnot cycle, in which the highest temperature of the working medium is equal to that of the high-temperature source, and the minimum temperature of the working medium is equal to that of the low-temperature source, i.e. as a result of the accomplishment of fully reversible processes.

If there is an isolated system not in mechanical equilibrium, consisting, as before, of compressed air and the surroundings, then the maximum amount of work can also be obtained while the system passes from the state of mechanical non-equilibrium into a state of equilibrium, provided fully reversible processes take place. Suppose that work is done with the aid of a piston-type air machine. It is clear that under otherwise identical conditions the work done will be the greater the smaller the friction between the piston and walls of the machine cylinder is. But friction is a typical irreversible process. Maximum work would be done if there were no friction at all, i.e. in a fully reversible process.

We arrived in this way to the following important conclusions.

(1) An isolated system is only capable of producing work if it is in a non-equilibrium state. Upon reaching a state of equilibrium, the *availability of the system* proves to be exhausted.

(2) To obtain the maximum available work when passing from a non-equilibrium state into a state of equilibrium, all processes which a system undergoes must be fully reversible.

The problem of determining numerically the maximum useful work,** sometimes referred to as the availability of a system, is therefore of paramount importance. Imagine having available an isolated system consisting

* We can imagine, for the sake of simplicity, that the temperature of the working medium did not change at all, being equal to the temperature of the thermally equilibrium state of the system.

** By useful work is meant the part of the work produced which can be utilized at our discretion.

of surroundings and some body or a totality of bodies, whose pressure p and temperature T (or one of these properties) differ from the pressure and temperature of the surroundings. Such a body or a group of bodies shall be referred to below as a *source of work*. Let us now define more precisely the concepts of useful work, maximum work, and the availability of the system concidered. Also assume that the temperature T_0 and pressure p_0 of the surroundings remain constant or, if anything, they do not depend on whether heat is added to or removed from the surroundings. Inasmuch as in the general case $p \neq p_0$, and $T \neq T_0$, the isolated system considered is a non-equilibrium one and is, consequently, capable of producing work. Let us try to determine the availability of the system, introducing for this purpose the following notations. Denote by U_1 and V_1, respectively, the internal energy and volume of the source of work in the initial non-equilibrium state, and by U_2 and V_2 the internal energy and the volume of the source of work in the final equilibrium (with respect to the surroundings) state. Denote the initial pressure and temperature of the source of work by p and T, and the final (equal to these of the surroundings) pressure and temperature by p_0 and T_0. Denote the initial internal energy of the surroundings by U_{01}, and the final by U_{02}. The total internal energy of the system in the initial non-equilibrium state is

$$U'_{\text{sys}} = U_1 + U_{01}, \tag{3.166}$$

and in the final equilibrium state

$$U''_{\text{sys}} = U_2 + U_{02}. \tag{3.167}$$

Since by definition the system considered is a closed one, work can be done by the system only at the expense of its internal energy:

$$L = U'_{\text{sys}} - U''_{\text{sys}} \tag{3.168}$$

or, according to Eqs. (3.166) and (3.167),

$$L = (U_1 - U_2) + (U_{01} - U_{02}). \tag{3.169}$$

But there may be heat exchange between the source of work and the surroundings; in addition, the source of work may perform work on the surroundings (against the pressure exerted by the surroundings). Denote the heat transferred from the source of work to the surroundings by Q_0, and the work done by the source of work on the surroundings by L_0. In accordance with the first law of thermodynamics, expressed by Eq. (2.15a),

$$U_{02} - U_{01} = Q_0 + L_0. \tag{3.170}$$

Since the pressure of the surroundings is assumed to be constant

$$L_0 = p_0 (V_2 - V_1) \tag{3.171}$$

and

$$U_{01} - U_{02} = -Q_0 - p_0 (V_2 - V_1). \tag{3.172}$$

Substituting the value $(U_{01} - U_{02})$ in Eq. (3.169), we obtain:

$$L = (U_1 - U_2) - Q_0 - p_0 (V_2 - V_1). \tag{3.173}$$

The heat transferred from the source of heat to the surroundings is evidently equal to the product of the constant temperature T_0 of the surroundings by the increase in its entropy $(S_{02} - S_{01})$, i.e.

$$Q_0 = T_0 (S_{02} - S_{01}). \tag{3.174}$$

Substituting the value of Q_0 from Eq. (3.173), we obtain:

$$L=(U_1-U_2)-T_0(S_{02}-S_{01})-p_0(V_2-V_1). \tag{3.175}$$

Equation (3.175) gives the magnitude of the *useful work* produced by an isolated system that passes from a non-equilibrium state into a state of equilibrium, since subtracted from the total work produced is a fraction of the work, $p_0(V_2 - V_1)$, which is spent to compress the surroundings and cannot, therefore, be used at will. Equation (3.175) does not, however, give the magnitude of the maximum useful work, or availability, since it fails to imply the condition that all processes developing in the system must necessarily be reversible.

To find the value of the *availability of an isolated system*, use should be made of the assumption that reversible processes do not result in a change in the entropy of an isolated system. Hence, taking into account the additivity property of entropy, it follows that if the entropy of the work source diminishes by $S_1 - S_2$, the entropy of the surroundings must increase by the same value, i.e. for reversible processes

$$S_{02}-S_{01}=S_1-S_2. \tag{3.176}$$

Accounting for Eqs. (3.175) and (3.176), we can write the equation for the availability of an isolated system:

$$L_{\text{use}}^{\max}=(U_1-U_2)-T_0(S_1-S_2)-p_0(V_2-V_1). \tag{3.177}$$

As can be seen from Eq. (3.177), the magnitude of the maximum useful work, or availability, of a system is determined unambiguously by the initial properties of the source of work and by the properties, or parameters, of the surroundings.

Consider several concrete examples of determining the maximum useful work. On the p-V diagram in Fig. 3.20 point *1* represents the initial state of the source of work*; point *2* is determined by the parameters of the surroundings, p_0 and T_0. As can be seen from the diagram, points *1* and *2* lie on one isotherm (the isotherm of the surroundings). Therefore, in its initial non-equilibrium state the isolated system consisting of a source of heat and the surroundings is in thermal but not in mechanical equilibrium ($p_1 > p_0$). What is then the availability of the system considered? This simple problem can be solved either by using Eq. (3.177) or with the aid of the p-v diagram shown in Fig. 3.20. Make use of the second way, solving the problem by means of the p-v diagram. The availability of the system will happen to be exhausted after the source of work passes from the initial state *1* into state *2*, i.e. after the isolated system comes into a state of equilibrium. For the system to produce the maximum possible work, the process realized by the source of work in passing from state *1* into state *2* must be fully reversible. Consequently, it is necessary to determine the possible reversible process (or the totality of reversible processes) as the source of work passes from state *1* into state *2*.

Since the isolated system considered comprises only one source of heat which is at a constant temperature, namely, the surroundings, the reversible process can be visualized as proceeding either in the absence of heat exchange between the source of work and the surroundings (adiabatic expan-

* For the sake of simplicity assume that the source of work has the properties of an ideal gas.

sion or compression of the source of work) or in the presence of heat flow between the source of work and the surroundings but at a necessarily constant surroundings temperature T_0 (isothermal expansion of compression of the source of work at a temperature T_0). In all other processes heat transfer between the source of work and the surroundings at a finite temperature difference is inevitable. The accomplishment of a reversible process is then impossible, meaning that the only reversible process possible between the states *1* and *2* is isothermal expansion of the gas along the isotherm T_0. The work produced by the source of work in this process is equivalent to the area *1-2-b-a-1* (Fig. 3.20).

But not all the work produced can be utilized at will; a fraction of the

Fig. 3.20

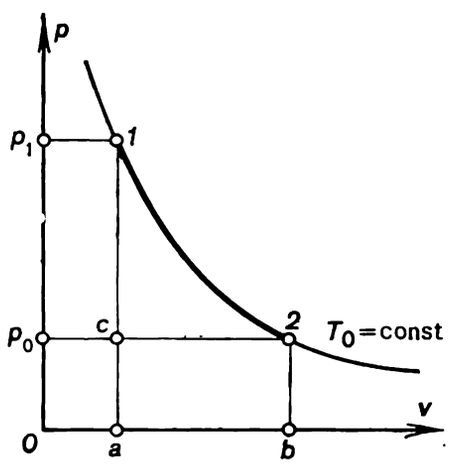

Fig. 3.21

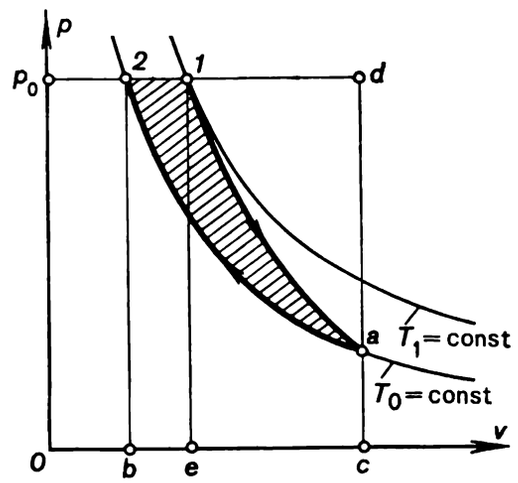

work equivalent to the area *a-c-2-b-a* is spent inevitably to displace the surroundings (to overcome the constant pressure p_0 exerted by the surroundings). Consequently, the maximum possible useful work, or the availability, equal to the difference between the work done and the fraction of the work spent to ensure the displacement of the surroundings, is equivalent to the area *1-2-c-1*.

The same result can be easily obtained directly from Eq. (3.177). Since the source of work considered in this example was assumed to possess the properties of an ideal gas, and inasmuch as the temperature of the source is the same in the states *1* and *2* and equal to T_0, the internal energy of the source of work is also the same in the states *1* and *2*, and the first member in the right-hand side of Eq. (3.177) is equal to zero. The second member in this equation represents the amount of heat added to the source of work in the isothermal process at temperature T_0, equal to the work done in this process (internal energy remains constant). In the course of isothermal expansion, the entropy of the heat source increases (heat is added), $S_2 > S_1$, and therefore the second member in Eq. (3.177) will be positive and numerically equal to the area *1-2-b-a-1* in Fig. 3.20. The last member in the equation will be negative ($V_2 > V_1$) and numerically equal to the area *a-c-2-b-a*. Thus, L_{use}^{max} = = (area *1-2-b-a-1*) — (area *a-c-2-b-a*) = (area *1-2-c-1*) is in agreement with the previously obtained result, as could be expected.

Consider a second example. Assume, as before, that an isolated system consists of a source of work possessing the properties of an ideal gas and surroundings. The initial state of the source of work is represented by point *1*

on the p-v diagram in Fig. 3.21 (pressure $p = p_0$, temperature T_1). As in the preceding example, the process is assumed to continue until the system comes into the state of equilibrium. Point *2*, then, characterizes the state of the source of work at the temperature and pressure equal to those of the surroundings, i.e. the state of the source of work in equilibrium with the surroundings. It is first of all necessary to determine for the source of heat a possible reverse path from state *1* to state *2*. As was already mentioned, for an isolated system with only one heat source at constant temperature (surroundings at the temperature T_0) the only reversible processes possible are the adiabatic and isothermal processes at the temperature T_0. The only possible reverse path which the source of work may follow in passing from state *1* into state *2* and in which the source is in equilibrium with the surroundings, is, therefore, the path of adiabatic expansion from the initial state to the state with the temperature of the surroundings (adiabatic curve *1-a* in Fig. 3.21) and the subsequent compression at constant temperature T_0 (isotherm *a-2*).

The maximum useful work, just as before, can be determined in two ways: either from Eq. (3.177) or with the aid of the p-v diagram shown in Fig. 3.21. We first follow the second way. Since in the course of adiabatic expansion *1-a* the pressure of the source of work does not exceed the pressure of the surroundings p_0,* the work done by the gas during this process (equivalent to the area *1-a-c-e-1*) is smaller than the work (equivalent to area *1-d-c-e-1*) which should be expended to compress the surroundings. Hence, not only no useful work can be produced but for the process *1-a* to proceed work equivalent to the area *1-d-a-1* must be expended. The work required for the accomplishment of this process can be visualized as being temporarily transferred from an external source of work. The process of isothermal expansion *a-2* demands an expenditure of work equivalent to the area *a-2-b-c-a*. This work can be done by the surroundings whose constant pressure p_0 is continuously greater than the pressure of the source of work.** Furthermore, the work which the surroundings are able to produce, due to a decrease in the volume of the system, which corresponds to isothermal compression *a-2*, exceeds the work spent to ensure isothermal compression of the source of work by an amount equivalent to the area *d-a-2-d*. The unknown maximum useful work will evidently be equal to the difference between the excess work (equivalent to the area *d-a-2-d*) and the work previously transferred from the external source (equivalent to the area *1-d-a-1*), i.e.

$$L_{\text{use}}^{\max} = (\text{area } d\text{-}a\text{-}2\text{-}d) - (\text{area } 1\text{-}d\text{-}a\text{-}1) = (\text{area } 1\text{-}a\text{-}2\text{-}1).$$

Just as in the preceding example, the magnitude of $L_{\text{use}}^{\max}$ can be determined directly from Eq. (3.177).

The first member in Eq. (3.177), $U_1 - U_2$, represents the work of adiabatic expansion between the temperatures T_1 and T_0, irrespective of the initial and final pressures,*** and this work will be positive and equivalent to the area *1-a-c-e-1*.

---

* Except the initial point *1*, where the pressure of the source of heat is equal to the pressure of the surroundings p_0.

** Except the final point *2* where these pressures are equal.

*** It will be recalled that the source of work involved in this example possesses the properties of an ideal gas, whose internal energy depends only on temperature and is independent of pressure [see (Eq. 2.35)]. As was already mentioned, in an adiabatic process work is done at the expense of a change in internal energy.

The second member in Eq. (3.177) represents the amount of heat transferred to the surroundings from the source of work. Since during the process of reversible adiabatic expansion *1-a* the entropy of the source of heat does not change, $S_1 = S_a$, and, consequently,

$$T_0 (S_1 - S_2) = T_0 (S_a - S_2). \tag{3.178}$$

The amount of heat added to (or removed from) an ideal gas undergoing an isothermal process is equal to the work of expansion or compression produced in this process. The amount of heat removed from the source of heat in the course of isothermal compression *a-2*, therefore, is equal to the work which is equivalent to the area *a-2-b-c*. Inasmuch as $S_a = S_1 < S_2$

Fig. 3.22

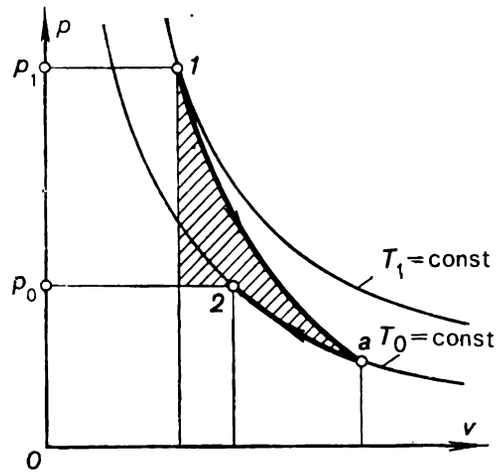

Fig. 3.23

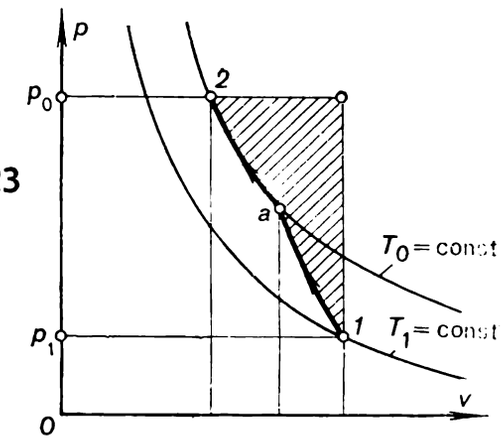

(in the course of process *a-2* heat is rejected from the source of work and, consequently, its entropy decreases), the second member in Eq. (3.177) will be positive.

Finally, the last member in Eq. (3.177), $p_0 (V_2 - V_1)$, as can be seen from the *p-v* diagram in Fig. 3.21, will also be positive and numerically equal to the area *1-2-b-e-1*. Thus, the maximum useful work $L_{\text{use}}^{\max}$ = (area *1-a-c-e-1*) + + (area *1-2-b-c-1*) — (area *a-2-b-c-a*) = (area *1-a-2-1*).

In the example considered, the system can be seen to produce work, resulting in that the volume occupied by the source of work decreases and the volume occupied by the surroundings increases, accordingly.

In Figs. 3.22 and 3.23 the shaded areas represent as before the magnitudes of the maximum useful work for the next two examples. In the first case (Fig. 3.22), in the initial state the system is out both of thermal and mechanical equilibrium since the temperature and pressure of the source of work is greater than T_0 and p_0. In the second case (Eig. 3.23), the system is also out of thermal and mechanical equilibrium in the initial state, but here $T_1 < T_0$ and $p_1 < p_0$. The maximum useful work is determined in both cases in a similar manner.

The concept of the maximum useful work of heat, or the *availability due to heat*, is of a more practical importance than the concept of the maximum useful work (the availability) of an isolated system.

Speaking of availability due to heat, we must consider an isolated system as consisting of two heat sources (a high-temperature source and a low-tempe-

rature source) and of the working medium undergoing a cycle. The surroundings, which are at a constant temperature T_0 and pressure p_0, are considered, as above, to be the low-temperature source, and usually (but not always) we consider the high-temperature source to be an infinitely large source which, consequently, is at a constant temperature T_1.

The *availability due to the heat removed from the high-temperature source* at a temperature T_1 is defined as the maximum useful work which can be obtained at the expense of this heat, provided the surroundings (at temperature T_0) are the low-temperature source. The availability due to heat will be denoted by $L_{use}^{'max}$.

It will be recalled that the greater the difference between the temperature of the high- and low-temperature sources, the larger is the fraction of the heat which can be removed from the high-temperature source and converted into work in the cycle.

It should be clearly understood that since the working medium undergoes a cyclic process, its internal energy does not change upon completion of the cycle and, therefore, work can only be done at the expense of the heat Q_1 added to the working medium from the high-temperature heat source. It is essential to note that the availability due to heat does not depend on the pressure of the surroundings p_0, since the volume of the working medium does not change as a result of the cyclic process, the surroundings do not undergo compression or expansion, and the entire work done by the working medium can be utilized at our discretion, i.e. it is useful work. The fraction of the heat Q_1 that is converted into work in the cycle is the greater, the higher the efficiency of the cycle involved.

As was shown above, in a given temperature interval the maximum efficiency is offered by a reversible Carnot cycle. Thus, the maximum useful work produced by a certain amount of heat Q_1 rejected from a high-temperature source at a temperature T_1 can be obtained when the system considered undergoes a reversible Carnot cycle.

It follows from the above conclusion that

$$L_{use}^{'max} = Q_1 \eta^{r.c.c.} = Q_1 \left(1 - \frac{T_0}{T_1}\right), \tag{3.179}$$

where $\eta^{r.c.c.}$ is the thermal efficiency of the reversible Carnot cycle operated between temperatures T_0 and T_1.

As can be seen from Eq. (3.179), the availability due to heat is the greater the smaller the ratio T_0/T_1. If the temperatures of the heat source and heat sink are the same ($T_0 = T_1$), the availability due to heat is equal to zero.

If an irreversible cycle is operated between the two heat sources, the useful work produced by the heat rejected from the high-temperature heat source will be smaller, than the availability due to heat, since the thermal efficiency of any irreversible cycle is always smaller than the thermal efficiency of a reversible Carnot cycle.

As we already mentioned, the useful work done by an isolated system (or by the heat removed from a high-temperature heat source) is the maximum possible work, provided that reversible processes proceed in the system. It will be once more noted that any irreversibility causes a decrease in the amount of useful work which can be done by the system. It is obvious that the useful work done by a system (or the useful work done by heat) will be the smaller, the greater the irreversibility of the processes, with the measure of

irreversibility being expressed by the increase in the entropy of the isolated system considered. That is why the decrease in the amount of useful work (often referred to as the loss of availability) and the increase in the entropy of a system due to irreversibility must be related unambiguously. The nature of this relationship can be easily established.

The amount of useful work done by an isolated system where irreversible processes take place, the system consisting of a source of work and surroundings, was shown to be determined from Eq. (3.175):

$$L_{use} = (U_1 - U_2) - T_0 (S_{02} - S_{01}) - p_0 (V_2 - V_1),$$

and the amount of the maximum useful work done by this system is determined from Eq. (3.177)

$$L_{use}^{max} = (U_1 - U_2) - T_0 (S_1 - S_2) - p_0 (V_2 - V_1),$$

where S_{01} and S_{02} are the initial and final entropies of the surroundings, and S_1 and S_2 are the initial and final entropies of the source of work.

It is clear that reversible process proceeding in an isolated system is

$$S_{02} - S_{01} = S_1 - S_2,$$

since the entropy of the isolated system does not change in this case.

But since Eq. (3.175) was derived for useful work, L_{use}, i.e. for the case when a system undergoes irreversible processes, and Eq. (3.177) was derived for the maximum useful work, L_{use}^{max}, i.e. for the case when only reversible processes proceed in a system, we have

$$(S_{02} - S_{01}) > (S_1 - S_2),$$

and thus

$$L_{use}^{max} - L_{use} = T_0 [(S_{02} - S_{01}) - (S_1 - S_2)] = T_0 \Delta S_{sys}, \tag{3.180}$$

where $\Delta S_{sys} = [(S_{02} - S_{01}) - (S_1 - S_2)]$ is the increase in the system's entropy as the result of the irreversible process proceeding in it.

It should be emphasized that L_{use}^{max} is the maximum possible work which a given isolated system is able to produce, provided that the processes leading this system to a state of equilibrium are reversible; L_{use} is the amount of work done by the same system if the processes proceeding in it are irreversible. The difference between these two amounts of work is defined as the loss of availability of the system due to the irreversibility of the process proceeding in it. From Eq. (3.180) it follows that the greater the measure of irreversibility of these processes, i.e. the greater the quantity ΔL_{sys}, the greater the loss of availability of the system.

Equation (3.180) is of universal importance. In particular, for an isolated system comprising a heat source, a heat sink, and a working medium undergoing a cycle.

In fact, the amount of work done by a certain amount of heat Q_1 rejected from the high-temperature source can be presented as the difference between Q_1 and the amount of heat Q_2 added to the low-temperature sink during the cycle:

$$L'_{use} = Q_1 - Q_2. \tag{3.181}$$

Since, as it was assumed above, the temperature of the low-temperature source (the surroundings) remains constant, Q_2 can be expressed as

$$Q_2 = T_0 \Delta S_{l.t.}, \tag{3.182}$$

whence

$$L'_{use} = Q_1 - T_0 \Delta S_{l.t.}. \tag{3.183}$$

Since the working medium undergoes a cycle, all its properties do not change no matter whether the processes proceeding in the system are reversible or irreversible. The entropy of the high-temperature source decreases, since heat is removed from this source, and the entropy of the low-temperature source increases. Since the total entropy of the system does not change when the processes developing in it are reversible, the increase in the entropy of the low-temperature source $\Delta S_{l.t.}$ must be equal to the decrease in the entropy of the high-temperature heat source $\Delta S_{h.t.}$.

Inasmuch as the irreversibility of all processes proceeding in the isolated system considered corresponds to the case when the maximum useful work produced by heat is obtained, with account taken of $\Delta S_{h.t.} = \Delta S_{l.t.}$ Eq. (3.183) gives:

$$L'^{max}_{use} = Q_1 - T_0 \Delta S_{h.t.} \tag{3.184}$$

[it can be easily shown that this equation is identical with the previously derived equation (3.179) for the availability due to heat; indeed, since in accordance with Eq. (3.135) the absolute value of

$$\Delta S_{h.t.} = \frac{Q_1}{T_1}, \tag{3.185}$$

substituting this quantity in (3.184) we get Eq. (3.179)].

From Eq. (3.183) and (3.184) it follows that

$$L'^{max}_{use} - L'_{use} = T_0 (\Delta S_{l.t.} - \Delta S_{h.t.}). \tag{3.186}$$

Since, as was already mentioned above, the entropy of the working medium undergoing a cycle does not change, it is clear that the difference between $\Delta S_{l.t.}$ and $\Delta S_{h.t.}$ represents the change in the entropy of the entire isolated system considered:

$$\Delta S_{sys} = \Delta S_{l.t.} - \Delta S_{h.t.}.$$

Taking the above relationship into account, we obtain from Eq. (3.181) the formula for the loss of availability of heat due to the irreversibility of the processes proceeding in the isolated system considered:

$$L'^{max}_{use} = L'_{use} = T_0 \Delta S_{sys}. \tag{3.187}$$

This relationship is identical with Eq. (3.180).

Denoting the loss of availability by ΔL, Eqs. (3.180) and (3.187) take the following form

$$\Delta L = T_0 \Delta S_{sys}. \tag{3.188}$$

The loss of availability ΔL is sometimes referred to as the *energy loss.*

Equation (3.188) is called the Gouy-Stodola equation after the French physicist G. Gouy, who was the first to derive this equation in 1889, and the Slovak scientist and engineer A. Stodola, who was the first to use this equation to solve engineering problems. Gouy-Stodola's equation finds wide application in analyzing the effectiveness of heat plants.

The determination of ΔS_{sys} is an intricate problem and it must be solved for each real process individually; examples for the calculating ΔS_{sys} are given in Sec. 9.4, Ch. 9.

4

Differential equations of thermodynamics

4.1 Basic methods

The combined mathematical expression for the first and second laws of thermodynamics formulated in the preceding chapter has the following appearance:

$$T\,dS = dU + dL. \tag{4.1}$$

On the basis of this equation with the aid of mathematical methods we can obtain a number of equations interrelating the various thermodynamic properties of substances.

As was already mentioned, all thermodynamic quantities can be divided into two groups, functions of state and functions of a process. The magnitude of a function of state is determined unambiguously by the properties, or parameters, of a given state. Hence, to determine the change of a function of state, we must only know the values of this function at the beginning and end of the process.

The functions of a process (for instance, work and heat) are determined by the nature of the process causing a change in the state of a thermodynamic system.

As was already mentioned in Chapter 2, the characteristic property of functions of state is that their differential is a total differential. It will be recalled that in mathematical analysis the name total differential of a function of several variables, $z = f(x, y, w, \ldots)$, is given to a quantity of the following kind

$$dz + \left(\frac{\partial z}{\partial x}\right)_{y,\,w\ldots} dx + \left(\frac{\partial z}{\partial y}\right)_{x,\,w\ldots} dy + \left(\frac{\partial z}{\partial w}\right)_{x,\,y\ldots} dw + \ldots. \tag{4.2}$$

In the great majority of cases, in dealing with pure substances we shall consider functions of two variables, $z = f(x, y)$, for which

$$dz = \left(\frac{\partial z}{\partial x}\right)_y dx + \left(\frac{\partial z}{\partial y}\right)_x dy. \tag{4.3}$$

Partial derivatives are taken on condition that the superscripts put outside the parenthesis are held constant during the differentiation. For instance, the derivative of pressure in respect to temperature, $\partial p/\partial T$, can be calculated for various conditions: on condition of a constant system volume v, on condition that the system's entropy s is constant, or that the system's enthalpy i is constant, etc. In each of these cases the derivative, respectively denoted by $\left(\frac{\partial p}{\partial T}\right)_v$, $\left(\frac{\partial p}{\partial T}\right)_s$, $\left(\frac{\partial p}{\partial T}\right)_i$, etc., will have, generally speaking, a different value.

It is known from mathematical analysis that

$$\frac{\partial^2 z}{\partial x\, \partial y} = \frac{\partial^2 z}{\partial y\, \partial x}, \tag{4.4}$$

i.e. the magnitude of a partial derivative of a higher order does not depend on the sequence of differentiation.

From this it follows that if the differential of any function $z = f(x, y)$ is presented in the form

$$dz = M\, dx + N\, dy \tag{4.5}$$

and if it is known that the differential of the function z is a total differential, the following relationship is true:

$$\frac{\partial M}{\partial y} = \frac{\partial N}{\partial x}. \tag{4.6}$$

Equation (4.6) will be used to obtain a number of important differential equations of thermodynamics.

Equation (4.6) can be used, in particular, to show that the differential of a function of a process is not a total differential. Consider, for instance, the expression for the differential of the amount of heat added to a system, i.e. the mathematical formulation of the first law of thermodynamics (2.23),

$$dq = du + p\, dv.$$

In order to represent q as a function of two variables p and v, substitute the relationship

$$du = \left(\frac{\partial u}{\partial T}\right)_v dT + \left(\frac{\partial u}{\partial v}\right)_T dv$$

for the differential of internal energy. We obtain:

$$dq = \left(\frac{\partial u}{\partial T}\right)_v dT + \left[\left(\frac{\partial u}{\partial v}\right)_T + p\right]. \tag{4.7}$$

We shall now check whether this relationship meets the condition formulated by Eq. (4.6). As applied to Eq. (4.7),

$$M = \left(\frac{\partial u}{\partial T}\right)_v, \quad N = \left(\frac{\partial u}{\partial v}\right)_T + p,$$

$$x = T, \quad y = v,$$

whence

$$\frac{\partial M}{\partial y}=\frac{\partial^2 u}{\partial T\,\partial v}, \tag{4.8}$$

$$\frac{\partial N}{\partial x}=\frac{\partial^2 u}{\partial v\,\partial T}+\left(\frac{\partial p}{\partial T}\right)_v. \tag{4.9}$$

With account taken of condition (4.4) it follows that the condition (4.6) does not apply to equation (4.7): $\partial N/\partial x$ exceeds $\partial M/\partial y$ by $(\partial p/\partial T)_v$. Hence, the differential dq is not a total differential.

A similar conclusion can also be obtained for another function of process, the work of expansion

$$dl = p\,dv. \tag{4.10}$$

Expressing this work as a function of two variables, pressure and volume, $l = f(p, v)$, the differential of this function takes the following form:

$$dl = M\,dv + N\,dp, \tag{4.11}$$

where $x = v$ and $y = p$.

Let us check whether the condition (4.6) is satisfied for this function. Comparing (4.10) and (4.11), it is clear that $M = p$, $N = 0$ and, consequently,

$$\frac{\partial M}{\partial y}=1, \quad \frac{\partial N}{\partial x}=0,$$

whence

$$\frac{\partial M}{\partial y}\neq\frac{\partial N}{\partial x}.$$

Thus, the differential dl is not a total differential.

It should be borne in mind that if the path of a process proceeding from state *1* to state *2* is strictly defined, the heat added to the system in the process and the work of expansion done by the system in this process will be determined unambiguously. So, if points *1* and *2* lie on an isotherm, the heat added to the system in the process of isothermal expansion, q_{12}, and the work done by the system in the course of isothermal expansion, l_{12}, can be determined unambiguously if the system's properties for the states *1* and *2* are given. It follows from this that if the properties of state are given for point *1*, the quantities q_{12} and l_{12} are single-valued functions of the properties of state at point *2*.

In this connection it is of interest to consider the concept of heat capacity. In Chapter 1 heat capacity was defined as

$$c=\frac{dq}{dt}.$$

Inasmuch as the heat q is a function of a process, in the general form heat capacity is also a function of a process. It was, however, stipulated above that in all instances it shall be specified what heat capacity or which process is involved. Thus the heat capacity is

$$c_x=\frac{dq_x}{dt},$$

where x is a constant parameter. In particular, if $x = p$, then $c_x = c_p$; if $x = v$, then $c_x = c_v$; etc. The heat capacities of concrete processes already

possess the properties of functions of state, i.e. in a concrete process heat capacity is determined by the properties of state.

Consider relationship (4.4) applied to the case z = const. Then, $dz = 0$ and, consequently,

$$\left(\frac{\partial z}{\partial x}\right)_y dx + \left(\frac{\partial z}{\partial y}\right)_x dy = 0,$$

whence

$$\left(\frac{\partial z}{\partial x}\right)_y + \left(\frac{\partial z}{\partial y}\right)_x \left(\frac{\partial y}{\partial x}\right)_z = 0,$$

or, which is the same,

$$\left(\frac{\partial z}{\partial y}\right)_x \left(\frac{\partial y}{\partial x}\right)_z \left(\frac{\partial x}{\partial z}\right)_y = -1. \tag{4.12}$$

It is clear that if a certain quantity z is a function of two variables x and y, $z = f(x, y)$, then, on the same grounds, the quantity x can be considered as a function of the variables y and z, $x = \varphi(y, z)$, and the quantity y as a function of x and z, $y = \psi(x, z)$. Equation (4.12) relates unambiguously all possible derivatives of these three functions. Equation (4.12) gives for p, v and T the following relations:

$$\left(\frac{\partial p}{\partial T}\right)_v \left(\frac{\partial T}{\partial v}\right)_p \left(\frac{\partial v}{\partial p}\right)_T = -1; \tag{4.12a}$$

for p, T and s

$$\left(\frac{\partial p}{\partial T}\right)_s \left(\frac{\partial T}{\partial s}\right)_p \left(\frac{\partial s}{\partial p}\right)_T = -1; \tag{4.12b}$$

for i, u and T

$$\left(\frac{\partial i}{\partial u}\right)_T \left(\frac{\partial u}{\partial T}\right)_i \left(\frac{\partial T}{\partial i}\right)_u = -1; \tag{4.12c}$$

etc.

Equation (4.3) yields one more useful relationship. Differentiating it with respect to x, on condition that a certain property of state ξ is constant we obtain:

$$\left(\frac{\partial z}{\partial x}\right)_\xi = \left(\frac{\partial z}{\partial x}\right)_y + \left(\frac{\partial z}{\partial y}\right)_x \left(\frac{\partial y}{\partial x}\right)_\xi. \tag{4.13}$$

Equation (4.13) permits a relationship to be established between the partial derivatives of one and the same quantities calculated, however, on the basis of different constant parameters.

4.2 Maxwell's relations

Write Eq. (3.160) in the following form:

$$du = T\,ds - p\,dv. \tag{4.14}$$

Denote by x and y two variables which are any pair of the four quantities p, v, T and s.

From Eq. (4.14) we obtain:

$$\left(\frac{\partial u}{\partial x}\right)_y = T\left(\frac{\partial s}{\partial x}\right)_y - p\left(\frac{\partial v}{\partial x}\right)_y \tag{4.15}$$

and

$$\left(\frac{\partial u}{\partial y}\right)_x = T\left(\frac{\partial s}{\partial y}\right)_x - p\left(\frac{\partial v}{\partial y}\right)_x. \tag{4.16}$$

Differentiating the first of the two equations with respect to y, and the second with respect to x, we obtain, respectively:

$$\frac{\partial^2 u}{\partial x\,\partial y} = \left(\frac{\partial T}{\partial y}\right)_x\left(\frac{\partial s}{\partial x}\right)_y + T\frac{\partial^2 s}{\partial x\,\partial y} - \left(\frac{\partial p}{\partial y}\right)_x\left(\frac{\partial v}{\partial x}\right)_y - p\frac{\partial^2 v}{\partial x\,\partial y} \tag{4.17}$$

and

$$\frac{\partial^2 u}{\partial y\,\partial x} = \left(\frac{\partial T}{\partial x}\right)_y\left(\frac{\partial s}{\partial y}\right)_x + T\frac{\partial^2 s}{\partial y\,\partial x} - \left(\frac{\partial p}{\partial x}\right)_y\left(\frac{\partial v}{\partial y}\right)_x - p\frac{\partial^2 v}{\partial y\,\partial x}. \tag{4.18}$$

Equating the right-hand sides of these equations, we obtain:

$$\left(\frac{\partial T}{\partial y}\right)_x\left(\frac{\partial s}{\partial x}\right)_y - \left(\frac{\partial p}{\partial y}\right)_x\left(\frac{\partial v}{\partial x}\right)_y = \left(\frac{\partial T}{\partial x}\right)_y\left(\frac{\partial s}{\partial y}\right)_x - \left(\frac{\partial p}{\partial x}\right)_y\left(\frac{\partial v}{\partial y}\right)_x. \tag{4.19}$$

Substitution into Eq. (4.19) of p, v, T and s for x and y permits a number of relationships to be obtained.

Substituting into Eq. (4.19) p and s for x and y, we get:

$$\left(\frac{\partial T}{\partial s}\right)_p\left(\frac{\partial s}{\partial p}\right)_s - \left(\frac{\partial p}{\partial s}\right)_p\left(\frac{\partial v}{\partial p}\right)_s = \left(\frac{\partial T}{\partial p}\right)_s\left(\frac{\partial s}{\partial s}\right)_p - \left(\frac{\partial p}{\partial p}\right)_s\left(\frac{\partial v}{\partial s}\right)_p.$$

Inasmuch as $\left(\frac{\partial s}{\partial p}\right)_s = 0$ and $\left(\frac{\partial p}{\partial s}\right)_p = 0$ and since, of course, $\left(\frac{\partial s}{\partial s}\right)_p = 1$ and $\left(\frac{\partial p}{\partial p}\right)_s = 1$, we obtain:

$$\left(\frac{\partial v}{\partial s}\right)_p = \left(\frac{\partial T}{\partial p}\right)_s. \tag{4.20}$$

Substituting in Eq. (4.19) v and s, p and T, v and T for x and y, we obtain, respectively:

$$\left(\frac{\partial v}{\partial T}\right)_s = -\left(\frac{\partial s}{\partial p}\right)_v, \tag{4.21}$$

$$\left(\frac{\partial v}{\partial T}\right)_p = -\left(\frac{\partial s}{\partial p}\right)_T, \tag{4.22}$$

$$\left(\frac{\partial v}{\partial s}\right)_T = -\left(\frac{\partial T}{\partial p}\right)_v. \tag{4.23}$$

These four differential equations (referred to as Maxwell's relations) will be often used below.

4.3 Partial derivatives of internal energy and enthalpy

Consider some of the most important relationships for the partial derivatives of internal energy and enthalpy.

From Eq. (4.14) we obtain:

$$\left(\frac{\partial u}{\partial v}\right)_T = T\left(\frac{\partial s}{\partial v}\right)_T - p. \tag{4.24}$$

Substituting into Eq. (4.24) the value of $(\partial s/\partial v)_T$ from Maxwell's relation (4.23), we find that

$$\left(\frac{\partial u}{\partial v}\right)_T = T\left(\frac{\partial p}{\partial T}\right)_v - p. \tag{4.25}$$

This relationship characterizes the dependence of internal energy on volume in an isothermal process.

Proceeding as above, we obtain the relationship characterizing the dependence of internal energy on pressure in an isothermal process:

$$\left(\frac{\partial u}{\partial p}\right)_T = T\left(\frac{\partial s}{\partial p}\right)_T - p\left(\frac{\partial v}{\partial p}\right)_T, \tag{4.26}$$

whence, with account taken of Eq. (4.22), we find:

$$\left(\frac{\partial u}{\partial p}\right)_T = -T\left(\frac{\partial v}{\partial T}\right)_p - p\left(\frac{\partial v}{\partial p}\right)_T. \tag{4.27}$$

Since

$$i = u + pv,$$

it is obvious that

$$di = du + p\,dv + v\,dp \tag{4.28}$$

and, consequently, Eq. (4.14) takes the following form:

$$di = T\,ds + v\,dp, \tag{4.29}$$

whence

$$\left(\frac{\partial i}{\partial p}\right)_T = T\left(\frac{\partial s}{\partial p}\right)_T + v. \tag{4.30}$$

Taking into account Eq. (4.22), we obtain:

$$\left(\frac{\partial i}{\partial p}\right)_T = v - T\left(\frac{\partial v}{\partial T}\right)_p \tag{4.31}$$

The above relation characterizes the dependence of enthalpy on pressure in an isothermal process.

Proceeding in a similar manner, we can derive the formula characterizing the dependence of enthalpy on volume in an isothermal process:

$$\left(\frac{\partial i}{\partial v}\right)_T = T\left(\frac{\partial s}{\partial v}\right)_T + v\left(\frac{\partial p}{\partial v}\right)_T, \tag{4.32}$$

and, allowing for Eq. (4.23), we obtain:

$$\left(\frac{\partial i}{\partial v}\right)_T = T\left(\frac{\partial p}{\partial v}\right)_T + v\left(\frac{\partial p}{\partial v}\right)_T. \tag{4.33}$$

As was already shown in Chapter 2, one of the properties of an ideal gas consists in that its caloric quantities are independent of thermal parameters:

$$\left(\frac{\partial u}{\partial v}\right)_T^{\text{ideal}} = 0 \quad \text{and} \quad \left(\frac{\partial i}{\partial p}\right)_T^{\text{ideal}} = 0.$$

The following "proof" of the independence of the internal energy of an ideal gas on volume (and, respectively, of enthalpy on pressure) can sometimes be encountered in the literature devoted to the subject: since from Clapeyron's equation

$$pv = RT$$

it is clear that

$$\left(\frac{\partial p}{\partial T}\right)_v^{\text{ideal}} = \frac{p}{T},$$

substituting this value of $(\partial p/\partial T)_v$ in equation (4.25) we get:

$$\left(\frac{\partial u}{\partial v}\right)_T^{\text{ideal}} = 0.$$

This proof, however, is deceptive. In fact, the dependence of internal energy u on volume v constitutes, as was already mentioned in Chapter 2, an independent, special property of an ideal gas and it is not related in any way to its other property, the property of an ideal gas obeying Clapeyron's equation. In Chapter 3 the independence of the internal energy of an ideal gas on volume was used to show that the ideal-gas temperature scale is identical with the Kelvin absolute thermodynamic scale. It is precisely this identity that permits us to use Clapeyron's equation in any thermodynamic calculations. Thus, the fact that $(\partial u/\partial v)_T^{\text{ideal}} = 0$ was already taken into account in Clapeyron's equation when the ideal-gas temperature was replaced in the equation with the absolute thermodynamic temperature (Sec. 3.5). Consequently, the above "proof" only states once more the previously known fact.

The equations derived in this section, especially Eqs. (4.25) and (4.31), are of paramount importance for thermodynamic studies of the properties of substances. Making use of the thermal properties of a substance (specific volume as a function of temperature and pressure), Eqs. (4.25) and (4.31) permit us to find the caloric quantities, i.e. the internal energy and enthalpy, and also to solve the reverse problem, i.e. using the known caloric quantities we can calculate the thermal properties of substances. At a given pressure p and temperature T the enthalpy of a substance is determined by integrating Eq. (4.31):

$$i(p, T) = i(p_0, T) + \int_{p_0}^{p} \left[v - T\left(\frac{\partial v}{\partial T}\right)_p\right] dp, \tag{4.34}$$

where $i(p_0, T)$ is the enthalpy of the substance in some initial state, characterized by the same temperature but by another pressure p_0.

By analogy,

$$u(v, T) = u(v_0, T) + \int_{v_0}^{v} \left[T\left(\frac{\partial p}{\partial T}\right)_v - p\right]_T dv, \tag{4.35}$$

where $u(v_0, T)$ is the internal energy of the substance in a state characterized by the same temperature T but by another specific volume v_0.

If data on the thermal properties of a substance are available, one can calculate the integrals present in the right-hand sides of Eqs. (4.34) and (4.35), with it being necessary then to first calculate the magnitudes of the derivatives $(\partial v/\partial T)_p$ or $(\partial p/\partial T)_v$. In both cases the integration is performed along an isotherm.

It should be emphasized that Eqs. (4.34) and (4.35) permit us to calculate not the values of i and u themselves (this problem cannot be solved by thermodynamic methods alone) but only the difference between the value of i (or u) in a given state and its value in any other state (initial) on the same isotherm.

To solve the reverse problem, i.e. to calculate the thermal quantities of a substance on the basis of the known caloric properties, we must transform Eqs. (4.25) and (4.31) in the following way:

$$\left(\frac{\partial u}{\partial v}\right)_T = -\left[\frac{\partial (p/T)}{\partial (1/T)}\right]_v \tag{4.36}$$

and

$$\left(\frac{\partial i}{\partial p}\right)_T = \left[\frac{\partial (v/T)}{\partial (1/T)}\right]_p. \tag{4.37}$$

Solving Eqs. (4.36) and (4.37), we obtain, respectively:

$$\frac{p(v, T)}{T} = \frac{p_0(v, T_0)}{T_0} - \int_{T_0}^{T} \left(\frac{\partial u}{\partial v}\right)_T d\left(\frac{1}{T}\right) \tag{4.38}$$

and

$$\frac{v(p, T)}{T} = \frac{v_0(p, T_0)}{T_0} + \int_{T_0}^{T} \left(\frac{\partial i}{\partial p}\right)_T d\left(\frac{1}{T}\right), \tag{4.39}$$

where $p_0(v, T_0)$ and $v_0(p, T_0)$ are the values of p and v in some initial state having the same specific volume [as applied to Eq. (4.38)] or the same pressure [as applied to Eq. (4.39)] as in the unknown state. It will be noted that the integral in Eq. (4.38) is taken along an isochor, and the integral in Eq. (4.39) along an isobar. The partial derivatives of caloric quantities present in the integrands are calculated from the known caloric properties of the substance.

Equations (4.38) and (4.39) are rarely used in practice, whereas Eqs. (4.34) and (4.35) find wide application in calculating the thermodynamic properties of substances.

In conclusion let as calculate some important derivatives of entropy: $\left(\frac{\partial s}{\partial u}\right)_v$, $\left(\frac{\partial s}{\partial i}\right)_p$, $\left(\frac{\partial s}{\partial v}\right)_u$ and $\left(\frac{\partial s}{\partial p}\right)_i$.

From Eq. (4.14) it follows that

$$\left(\frac{\partial s}{\partial u}\right)_v = \frac{1}{T} \tag{4.40}$$

and

$$\left(\frac{\partial s}{\partial v}\right)_u = \frac{p}{T}, \tag{4.41}$$

and from equation (4.29) we get:

$$\left(\frac{\partial s}{\partial i}\right)_p = \frac{1}{T} \tag{4.42}$$

and

$$\left(\frac{\partial s}{\partial p}\right)_i = -\frac{v}{T}. \tag{4.43}$$

4.4 Heat capacities

Since

$$dq = T\,ds \quad \text{and} \quad c_x = \frac{dq_x}{dT},$$

we can write

$$c_x = T\left(\frac{\partial s}{\partial T}\right)_x. \tag{4.44}$$

In particular, for the heat capacity at constant pressure,

$$c_p = T\left(\frac{\partial s}{\partial T}\right)_p. \tag{4.45}$$

Since, as can be seen from Eq. (4.29), for an isobaric process (p = const)

$$T\,ds = di,$$

we have

$$c_p = \left(\frac{\partial i}{\partial T}\right)_p. \tag{4.46}$$

Analogously, for the heat capacity at constant volume,

$$c_v = T\left(\frac{\partial s}{\partial T}\right)_v. \tag{4.47}$$

With account taken of the fact that, as can be seen from Eq. (4.14), in an isochoric process (v = const)

$$T\,ds = du,$$

we obtain from Eq. (4.47):

$$c_v = \left(\frac{\partial u}{\partial T}\right)_v. \tag{4.48}$$

The set of differential equations of thermodynamics permits the establishment of a number of important relations for heat capacities.

Differentiating

$$i = u + pv$$

with respect to temperature at p = const, we obtain:

$$\left(\frac{\partial i}{\partial T}\right)_p = \left(\frac{\partial u}{\partial T}\right)_p + p\left(\frac{\partial v}{\partial T}\right)_p. \tag{4.49}$$

To pass from the partial derivative $(\partial y/\partial T)_p$ to the derivative $(\partial u/\partial T)_v$ make use of Eq. (4.13):

$$\left(\frac{\partial u}{\partial T}\right)_p = \left(\frac{\partial u}{\partial T}\right)_v + \left(\frac{\partial u}{\partial v}\right)_T\left(\frac{\partial v}{\partial T}\right)_p. \tag{4.50}$$

Using the relationship (4.25), we get:

$$\left(\frac{\partial u}{\partial T}\right)_p = c_v + T\left(\frac{\partial p}{\partial T}\right)_v\left(\frac{\partial v}{\partial T}\right)_p - p\left(\frac{\partial v}{\partial T}\right)_p. \tag{4.51}$$

Substituting Eq. (4.51) into relation (4.49), we find that

$$c_p - c_v = T\left(\frac{\partial p}{\partial T}\right)_v\left(\frac{\partial v}{\partial T}\right)_p. \tag{4.52}$$

With the aid of Eq. (4.12a), the important equation (4.52) that relates the constant-pressure (isobaric) and constant-volume (isochoric) heat capacities, c_p and c_v, can also be presented in two forms:

$$c_p - c_v = -T\left(\frac{\partial v}{\partial p}\right)_T\left(\frac{\partial p}{\partial T}\right)_v^2 \tag{4.53}$$

or

$$c_p - c_v = -T\left(\frac{\partial p}{\partial v}\right)_T\left(\frac{\partial v}{\partial T}\right)_p^2. \tag{4.54}$$

For an ideal gas,

$$\left(\frac{\partial p}{\partial T}\right)_v = \frac{p}{T} \quad \text{and} \quad \left(\frac{\partial v}{\partial T}\right)_p = \frac{v}{T};$$

consequently,

$$c_p - c_v = \frac{pv}{T} = R.$$

Equation (4.45) can be rewritten in the following way:

$$c_p = T\left(\frac{\partial s}{\partial v}\right)_p \left(\frac{\partial v}{\partial T}\right)_p.$$

Applying Maxwell's relation (4.20), we obtain:

$$c_p = T\left(\frac{\partial p}{\partial T}\right)_s \left(\frac{\partial v}{\partial T}\right)_p. \tag{4.55}$$

Analogously, for the constant-volume heat capacity Eq. (4.47) yields

$$c_v = T\left(\frac{\partial s}{\partial p}\right)_v \left(\frac{\partial v}{\partial T}\right)_v;$$

whence, with account taken of Maxwell's relation (4.21), we obtain an equation relating the constant-volume heat capacity c_v and the derivative $(\partial p/\partial T)_v$,

$$c_v = -T\left(\frac{\partial p}{\partial T}\right)_v \left(\frac{\partial v}{\partial T}\right)_s. \tag{4.56}$$

The relation expressing the dependence of c_p on pressure, i.e. the quantity $(\partial c_p/\partial p)_T$ is found by differentiating Eq. (4.31) with respect to temperature at p = const:

$$\frac{\partial^2 i}{\partial p\, \partial T} = -T\left(\frac{\partial^2 v}{\partial T^2}\right)_p.$$

Since the sequence of differentiation does not effect a higher-order derivative,

$$\frac{\partial^2 i}{\partial p\, \partial T} = \left[\frac{\partial}{\partial T}\left(\frac{\partial i}{\partial p}\right)_T\right]_p = \left[\frac{\partial}{\partial p}\left(\frac{\partial i}{\partial T}\right)_p\right]_T$$

and, consequently,

$$\left(\frac{\partial c_p}{\partial p}\right)_T = -T\left(\frac{\partial^2 v}{\partial T^2}\right)_p. \tag{4.57}$$

By analogy, from (4.25) we can derive the equation for the dependence of the constant-volume heat capacity, c_v, on volume:

$$\left(\frac{\partial c_v}{\partial v}\right)_T = T\left(\frac{\partial^2 p}{\partial T^2}\right)_v. \tag{4.58}$$

In conclusion, let us formulate one more essential thermodynamic equation, which relates the quantities c_p and c_v. Dividing (4.55) by (4.56), we get:

$$\left(\frac{\partial p}{\partial v}\right)_s = \frac{c_p}{c_v}\left(\frac{\partial p}{\partial v}\right)_T. \tag{4.59}$$

Combining equations (4.59) with (4.52), we get the following two relations:

$$\left(\frac{\partial v}{\partial p}\right)_s = \left(\frac{\partial v}{\partial p}\right)_T + \frac{T}{c_p}\left(\frac{\partial v}{\partial T}\right)_p^2, \tag{4.60}$$

$$\left(\frac{\partial p}{\partial v}\right)_s = \left(\frac{\partial p}{\partial v}\right)_T - \frac{T}{c_v}\left(\frac{\partial p}{\partial T}\right)_v^2. \tag{4.61}$$

5

Equilibrium in thermodynamic systems and phase changes

5.1 Homogeneous and heterogeneous thermodynamic systems

A *homogeneous thermodynamic system* is defined as the one whose chemical composition and physical properties are the same in all parts of the system, or change continuously from one point to another. A homogeneous system can be exemplified by imagining a column of atmospheric air, which is a mixture of a number of gases, mainly nitrogen and oxygen. In a system of this kind, acted upon by the force of gravity, both the composition of the system and its physical properties will continuously change from one point to another.

A *heterogeneous system* is defined as one consisting of two or more homogeneous bodies. The homogeneous bodies of a heterogeneous system are referred to as *phases*. Each phase is separated from other phases by interfaces, or boundaries, and in passing over such a boundary the chemical composition of the substance or its physical properties abruptly change. This phase boundary must not be regarded as a mathematical surface but as a thin layer separating the phases, a layer where the properties of one phase pass, or turn, rapidly into the properties of the other phase.

An example of a heterogeneous system is water with ice floating in it. This system has two homogeneous bodies, water and ice. The chemical composition of the two phases is the same, but their physical properties differ drastically.

Another example of a heterogeneous system is the content of a sealed steel tube containing liquid mercury, liquid ethyl alcohol, and a mixture of saturated vapours of the alcohol and mercury. This heterogeneous system comprises three phases. The first phase is the liquid mercury, the second is

the liquid ethyl alcohol, and the third phase is represented by the mixture of saturated vapours. Here the chemical compositions and the physical properties of all phases are different.

A homogeneous system and each phase of a heterogeneous system may consist of one or several pure substances.

A homogeneous system or the phase of a heterogeneous system that consist of several pure substances is called a solution or mixture.

All pure substances and solutions can exist in three states of aggregation: gas, liquid and solid.

5.2 Thermodynamic equilibrium

A *state of equilibrium* is defined as the state to which a thermodynamic system tends under given external conditions. If the external conditions do not change, the state of equilibrium is retained in a system any length of time. We must distinguish between the state of stable equilibrium, the state of unstable (or labile) equilibrium, and the state of metastable equilibrium.

The state of *stable* equilibrium (the *stable* state) is characterized by that if the system considered is brought out of the state of stable equilibrium by some external disturbance, then when this disturbance is removed, the system will return into the initial state of equilibrium by itself.

If a system is in a state of *unstable* equilibrium (the labile state), the system will not return into the initial state and will pass into a new state, the state of stable equilibrium.

Even the slightest external disturbance is sufficient to put a system out of the state of labile (unstable) equilibrium.

Finally, the state of *relatively stable* equilibrium (the *metastable* state) is defined as the state in which a system remains for a long period of time, and any slight disturbance causing the system to deviate from the metastable state does not result in the system passing into another state; as soon as the external disturbance is removed, the system will return into the initial metastable state. On the other hand, a sufficiently strong disturbance will put the system out of the metastable state, and the system will pass into a new state of stable equilibrium. Thus, the metastable state is intermediate in relation to the stable and labile states.

Let us consider now in greater detail the state of stable equilibrium for pure substances (single-component systems).

Since, as we already know, all spontaneous processes developing in a system are directed toward the state of equilibrium, it is very important to determine for each individual case the conditions for the state of equilibrium, so as to determine the direction of any possible spontaneous process, which is of paramount importance in analyzing various chemical reactions.

In Chapter 3 an important criterion for the equilibrium of an isolated thermodynamic system was defined. It will be recalled that by an isolated system we mean a system which exchanges neither heat nor mechanical work with the surroundings. Hence, for such a system the internal energy and volume are constant, i.e. $U = \text{const}$ and $V = \text{const}$.

As was revealed in Chapter 3, in accordance with the second law of thermodynamics the entropy of an isolated system tends to a maximum, and in the state of equilibrium the entropy of an isolated system is the maximum

possible for the given system, i.e. for an equilibrium isolated system $dS = 0$. In fact, for an isolated system $dU = 0$ and $dV = 0$, and from Eq. (3.157), i.e.

$$T\,dS \geqslant dU + p\,dV,$$

(where the inequality sign corresponds to irreversible processes, and the equality sign to reversible processes) we obtain:

$$dS \geqslant 0.$$

This is the condition of equilibrium for an isolated system.

Here the inequality sign corresponds to a non-equilibrium state, and the equality sign indicates an already attained equilibrium state.

Thus, for an isolated system in equilibrium,

$$S = S_{\max}, \quad dS = 0, \quad d^2S < 0;$$

the last relationship shows that in a state of equilibrium the value of entropy is the maximum possible.

But if a system can interact with the surroundings, the conditions for equilibrium will differ from those given in Eq. (3.149). The equilibrium will depend on the conditions governing the interaction between the system and the surroundings.

Four types of interaction conditions (sometimes referred to as conjugation conditions) for a system tending to equilibrium with the surroundings are of the greatest importance.

(1) The volume of the system remains constant, but there may be heat transfer between the system and the surroundings, with the system's entropy remaining constant:

$$V = \text{const}, \quad S = \text{const}.$$

(2) There may be heat and mechanical work transfer between the system and the surroundings, provided that the system's pressure and entropy remain constant:

$$p = \text{const}, \quad S = \text{const}.$$

(3) The system's volume remains constant, but there may be heat transfer between the system and the surroundings, with the temperature remaining constant:

$$V = \text{const}, \quad T = \text{const}.$$

(4) There may be heat and mechanical work transfer between the system and the surroundings, provided that the system's pressure and temperature remain constant:

$$p = \text{const}, \quad T = \text{const}.$$

We shall find the criterion of equilibrium for each of these four possible cases of interaction between a system and its surroundings.

(1) The interaction conditions are $V = \text{const}$ and $S = \text{const}$, i.e. $dV = 0$ and $dS = 0$. From relationship (3.157), expressed as

$$dU \leqslant T\,dS - p\,dV,$$

it follows that the criterion of equilibrium for a system with $V = \text{const}$ and $S = \text{const}$ is

$$dU \leqslant 0; \tag{5.1}$$

in other words, when a system approaches a state of equilibrium, its internal energy diminishes, reaching its minimum value in the state of equilibrium. Thus, in a state of equilibrium,

$$U = U_{\min}, \quad dU = 0, \quad d^2U > 0. \tag{5.2}$$

(2) The interaction conditions are: p = const and S = const, i.e. $dp = 0$ and $dS = 0$. Inasmuch as

$$I = U + pV,$$

it is clear that

$$dI = dU + p\,dV + V\,dp \tag{5.3}$$

and, consequently, Eq. (3.157) reduces to

$$dI \leqslant T\,ds + V\,dp, \tag{5.4}$$

from which it follows that the criterion of equilibrium for a system with p = const and S = const is

$$dI \leqslant 0, \tag{5.5}$$

that is, as a system approaches a state of equilibrium, its enthalpy diminishes, reaching a minimum in the state of equilibrium. Thus, in a state of equilibrium

$$I = I_{\min}, \quad dI = 0, \quad d^2I > 0. \tag{5.6}$$

(3) Interaction conditions: V = const and T = const, i.e. $dV = 0$ and $dT = 0$. Inasmuch as

$$T\,dS = d\,(TS) - S\,dT, \tag{5.7}$$

Eq. (3.157) takes the following form:

$$dU - d\,(TS) \leqslant -S\,dT - p\,dV. \tag{5.8}$$

It is clear that

$$dU - d\,(TS) = d\,(U - TS). \tag{5.9}$$

The thermodynamic function $(U - TS)$ is called the *Helmholtz free energy*, or the *isochoric-isothermal potential*. Denote it

$$F = U - TS. \tag{5.10}$$

Thus,

$$dF \leqslant -S\,dT - p\,dV. \tag{5.11}$$

It follows from Eq. (5.11) that the equilibrium criterion for a system with V = const and T = const (an isochoric-isothermal system) is

$$dF \leqslant 0. \tag{5.12}$$

In other words, when a system approaches a state of equilibrium, its isochoric-isothermal potential diminishes, reaching its minimum value in the state of equilibrium.

Thus, in a state of equilibrium,

$$F = F_{\min}, \quad dF = 0, \quad d^2F > 0. \tag{5.13}$$

(4) The interaction conditions are: p = const and T = const, i.e. $dp = 0$ and $dT = 0$. Combining Eqs. (5.3) and (5.8), we get:

$$dI - d(TS) \leqslant -S\,dT + V\,dp. \tag{5.14}$$

The thermodynamic function $(I - TS)$ is called the *Gibbs free energy*, or the *isobaric-isothermal potential*. Denote it

$$\Phi = I - TS \tag{5.15}$$

Thus,

$$d\Phi \leqslant -S\,dT + V\,dp. \tag{5.16}$$

It follows from Eq. (5.16) that the equilibrium criterion for a system with p = const and T = const (an isobaric-isothermal system) is

$$d\Phi \leqslant 0. \tag{5.17}$$

In other words, when a system approaches a state of equilibrium, its isobaric-isothermal potential diminishes, reaching its minimum value in the state of equilibrium. Thus, in a state of equilibrium

$$\Phi = \Phi_{\min}, \quad d\Phi = 0, \quad d^2\Phi > 0. \tag{5.18}$$

These conditions of equilibrium were derived from the assumption that the only kind of work done by the system while it interacts with the surroundings is the work of expansion. If we consider a case when, in addition to the work of expansion, a system is capable of performing other kinds of work (for instance, work in a magnetic, electric, or gravitational field, work expended in increasing a surface, etc.), and make use of Eq. (3.153),

$$T\,dS \geqslant dU + dL,$$

where

$$dL = p\,dV + dL', \tag{5.19}$$

with dL' being the differential of all kinds of work except expansion work, we shall obtain somewhat different equilibrium criteria for the four types of interaction conditions considered above:

(1) V = const, S = const:

$$dU + dL' \leqslant 0, \tag{5.20}$$

and in a state of equilibrium

$$dU = -dL'; \tag{5.21}$$

(2) p = const, S = const:

$$dI + dL' \leqslant 0, \tag{5.22}$$

and in a state of equilibrium

$$dI = -dL'; \tag{5.23}$$

(3) V = const, T = const:

$$dF + dL' \leqslant 0, \tag{5.24}$$

and in a state of equilibrium

$$dF = -dL'; \tag{5.25}$$

(4) p = const, T = const:

$$d\Phi + dL' \leqslant 0, \tag{5.26}$$

and in a state of equilibrium

$$d\Phi = -dL'. \tag{5.27}$$

The quantities F and Φ are formed from the functions of state I, U and S, which implies that these quantities are also functions of state.

The internal energy U, enthalpy I, free energy F and the isobaric-isothermal potential Φ, which define the conditions of equilibrium for a thermodynamic system under various conditions of interaction with the surroundings, are called the *characteristic functions*. Besides of being the criteria of equilibrium for thermodynamic systems, the characteristic functions possess one more important property: if one of the characteristic functions, expressed in terms of its proper variables, is known, we can calculate any thermodynamic quantity.

So, if internal energy U is represented as a function of volume V and entropy S, it is easy to show that the other basic thermodynamic quantities are determined as

$$p = -\left(\frac{\partial U}{\partial V}\right)_S \tag{5.28}$$

and

$$T = \left(\frac{\partial U}{\partial S}\right)_V. \tag{5.29}$$

Knowing U, V, S, p and T, we can easily calculate the enthalpy I, free energy F, the isobaric-isothermal potential Φ and other quantities.

If enthalpy I is known as a function of pressure p and entropy S,

$$T = \left(\frac{\partial I}{\partial S}\right)_p \tag{5.30}$$

and

$$V = \left(\frac{\partial I}{\partial p}\right)_S. \tag{5.31}$$

If I, p, S, T and V are known, it is easy to determine the internal energy U, free energy F, the isobaric-isothermal potential Φ, etc. Making use of the expression relating free energy F with volume V and temperature T, we find:

$$p = -\left(\frac{\partial F}{\partial V}\right)_T \tag{5.32}$$

and

$$S = -\left(\frac{\partial F}{\partial T}\right)_V. \tag{5.33}$$

Having available the values of F, V, T, p and S, we can determine the internal energy U, enthalpy I, the isobaric-isothermal potential Φ and other thermodynamic quantities.

Finally, if the dependence of the isobaric-isothermal potential Φ on pressure p and temperature T is known,

$$V = \left(\frac{\partial \Phi}{\partial p}\right)_T \tag{5.34}$$

and

$$S = -\left(\frac{\partial \Phi}{T}\right)_p. \tag{5.35}$$

Knowing the values of Φ, p, T, V and S, it is easy to calculate the internal energy U, enthalpy I, free energy F and other quantities.

It can easily be assured that entropy does not possess the property of a characteristic function.

The quantities F and Φ have not been given the name of potentials by chance. Not only the quantities F and Φ, but also the internal energy and enthalpy are usually referred to as thermodynamic potentials, and for the following reason.

As was already mentioned, if in addition to the work of expansion a system is capable of performing other kinds of work, the total work done by the system is the sum of the work of expansion and of the other kinds of work.

It follows from Eqs. (5.21), (5.23), (5.25) and (5.27) that the work L' that can be performed by a system under given conditions of conjugation with the surroundings is equal to the decrease in a corresponding thermodynamic function. In consequence, the characteristic functions are called potentials by analogy with mechanics.

Of all the thermodynamic potentials the free energy F can be distinguished as being important not only as an isochoric-isothermal potential but also as an isothermal potential. Consider a system, that obeys only one condition $T = \text{const}$.

From the relationship

$$dF = -S\,dt - p\,dV - dL' \tag{5.36}$$

for an isothermal system we obtain

$$dF = -p\,dV - dL', \tag{5.37}$$

and since

$$p\,dV + dL' = dL, \tag{5.38}$$

consequently,

$$dF = -dL. \tag{5.39}$$

Thus, the total work (including the work of expansion) which can be done by a thermodynamic system undergoing a reversible process at $T = \text{const}$ is equal to the decrease in free energy.

Let us say a few words about the origin of the term "free energy". The expression for the internal energy of a system can be written as

$$U = F + TS. \tag{5.40}$$

We already know that in an isochoric-isothermal system work can be performed only at the expense of the free energy F. Thus, in such a system it is not all of the internal energy that can be converted into work but only its "free" fraction F. As concerns the product TS, often referred to as bound energy, it cannot be converted into work.

Based on similar grounds, the isobaric-isothermal potential Φ is sometimes called the free enthalpy; in an isobaric-isothermal system work can be done only at the expense of Φ, which is but a fraction of the system's enthalpy:

$$I = \Phi + TS. \tag{5.41}$$

It follows from Eqs. (5.15), (5.10) and (2.39) that the quantities Φ and F are interrelated as follows:

$$\Phi = F + pV. \tag{5.42}$$

Completing the study of the thermodynamic potentials, let us also become acquainted with the concept of the chemical potential. The *chemical potential* φ of a substance is the name given to the specific (per unit mass) isobaric-

isothermal potential:

$$\varphi = i - Ts, \tag{5.43}$$

where i and s are the specific enthalpy and entropy. But why does the specific isobaric-isothermal potential, a quantity that appears similar to the specific free energy, specific enthalpy and specific internal energy, occupies such a special position? To give an answer to this question, let us examine how the characteristic functions of a system change in relation to the amount of substance in the system.

Considering so far the equilibrium criteria for various thermodynamic systems, the amount of substance in a system, G, was assumed to be constant. However, in solving a number of problems (for instance, in analyzing the conditions for phase equilibrium) it is helpful to find the change in the system's potential resulting from the removal of a certain quantity of substance dG, or upon the addition of some quantity of substance dG, to the system. In other words, it is necessary to find the quantities

$\left(\frac{\partial \Phi}{\partial G}\right)_{p,T}$ for systems with $p = \text{const}$ and $T = \text{const}$,

$\left(\frac{\partial F}{\partial G}\right)_{V,T}$ for systems with $V = \text{const}$ and $T = \text{const}$,

$\left(\frac{\partial I}{\partial G}\right)_{p,S}$ for systems with $S = \text{const}$ and $p = \text{const}$,

$\left(\frac{\partial U}{\partial G}\right)_{V,S}$ for systems with $S = \text{const}$ and $V = \text{const}$.

In illustration, consider an isobaric-isothermal system (V = const, T = const).

Since the characteristic functions are additive quantities, the free energy of this system is

$$F = Gf, \tag{5.44}$$

where f is the specific free energy,

$$f = u - Ts. \tag{5.45}$$

From Eq. (5.44) we obtain:

$$dF = f\,dG + G\,df. \tag{5.46}$$

It also follows from Eq. (5.45) that

$$df = du - T\,ds - s\,dT; \tag{5.47}$$

in a particular system capable of performing only work of expansion

$$df = -p\,dv - s\,dT. \tag{5.48}$$

Consequently, Eq. (5.46) reduces to

$$dF = f\,dG - pG\,dv - sG\,dT. \tag{5.49}$$

It is clear that

$$G\,dv = d\,(Gv) - v\,dG, \tag{5.50}$$

and since by virtue of the additivity of volume,

$$Gv = V, \tag{5.51}$$

we have

$$G\,dv = dV - v\,dG. \tag{5.52}$$

Substituting this quantity into Eq. (5.49), we obtain:

$$dF = f\,dG - p\,dV + pv\,dG - sG\,dT, \tag{5.53}$$

or, which is the same,

$$dF = (f + pv)\,dG - p\,dV - S\,dT. \tag{5.54}$$

Inasmuch as in the isochoric-isothermal system considered $V = \text{const}$ and $T = \text{const}$, i.e. $dV = 0$ and $dT = 0$, we have

$$dF = (f + pv)\,dG. \tag{5.55}$$

It follows from Eq. (5.42) that

$$f + pv = \varphi. \tag{5.56}$$

Hence, Eq. (5.55) yields

$$\left(\frac{\partial F}{\partial G}\right)_{V,T} = \varphi. \tag{5.57}$$

This result is somewhat surprising. In fact, we found that with a change in the quantity of substance in an isochoric-isothermal system, the free energy F of the system as a whole changes in proportion to the specific isobaric-isothermal potential φ and not in proportion to f, as would seem to be more natural.

It will be emphasized that the partial derivative present in Eq. (5.57) was taken at $V = \text{const}$, i.e. on the condition that the volume of the system is constant. But if the derivative of F with respect to G is taken at $v = \text{const}$, i.e. on the condition that the specific volume of the system is constant, the derivative will be different. In fact, if $v = \text{const}$, then, inasmuch as

$$V = vG,$$

it is clear that

$$dV = v\,dG. \tag{5.58}$$

Substituting this value into Eq. (5.54), we find that for the system for which $v = \text{const}$ and $T = \text{const}$,

$$dF = f\,dG, \tag{5.59}$$

from which it follows that

$$\left(\frac{\partial F}{\partial G}\right)_{v,T} = f. \tag{5.60}$$

The difference between the values of the derivatives expressed by (5.57) and (5.60) is traced to the fact that the derivative (5.57) is calculated assuming $V = \text{const}$, i.e. for the case when the amount of substance in the system changes but its volume remains constant; as regards the derivative (5.60), the condition $v = \text{const}$ holds for the case when the system's volume changes in proportion to the change of substance in the system.

Making similar transformations for systems with $p = \text{const}$ and $T = \text{const}$, $p = \text{const}$ and $S = \text{const}$, or $V = \text{const}$ and $S = \text{const}$, we can make sure that for each of the enumerated cases the derivative of the corresponding characteristic function with respect to the quantity of substance in the system equals φ, i.e.

$$\left(\frac{\partial \Phi}{\partial G}\right)_{p,T} = \left(\frac{\partial F}{\partial G}\right)_{V,T} = \left(\frac{\partial I}{\partial G}\right)_{p,S} = \left(\frac{\partial U}{\partial G}\right)_{V,S} = \varphi. \tag{5.61}$$

Thus, the specific isobaric-isothermal potential φ possesses a striking property: it permits calculation of the change in a characteristic function of any system following a change in the quantity of substance in the system. It is precisely because of this that the quantity φ was given the name of chemical potential. As it will be seen below, the chemical potential is of great importance in analyzing processes that involve changes of phase when a substance changes one phase into another.

The concept of the chemical] potential proves to be of paramount importance in chemical thermodynamics, when studying chemical reactions.

In conclusion, one more detail must be noted. As is known, the quantity characterizing the state of equilibrium of an isolated system (V = const, U = const) is entropy, which, as was already mentioned above, is not a characteristic function. It is, however, interesting to note that the derivative with respect to G of the entropy of a system is also related to the chemical potential φ; it is easy to show that

$$\left(\frac{\partial S}{\partial G}\right)_{U,\,V} = -\frac{\varphi}{T}. \tag{5.62}$$

5.3 Conditions of stability and equilibrium for an isolated homogeneous system

Thermodynamic methods make it possible to show that if a system is in the state of thermodynamic stability, the following relationships must be satisfied for any substance:

$$c_v > 0 \tag{5.63}$$

and

$$\left(\frac{\partial p}{\partial v}\right)_T < 0, \tag{5.64}$$

i.e. in the first place, the isochoric (constant-volume) heat capacity c_v is always positive and, in the second place, in an isothermal process an increase in pressure always results in a decrease in the volume of substance. The condition (5.63) is called the *condition for thermal stability*, and the condition (5.64) is referred to as the *condition for mechanical stability*.

The conditions (5.63) and (5.64) can be elucidated by the so-called *Le Chatelier principle*, which states that:

If a system is subjected to a constraint whereby the equilibrium is modified, a change takes place, if possible, which partially annuls the constraint.

These conditions for thermodynamic stability of a system are clear and require no formal derivation. Imagine the heat capacity c_v of some substance to be negative. This would mean that, since

$$c_v = \frac{dq_v}{dT},$$

isochoric addition of heat would result not in an increase but in a decrease in temperature. This would mean that the more heat added to the substance undergoing an isochoric process, the greater the difference between the temperatures of the substance and the heat source (surroundings). As a result of the increase in the difference between the temperatures of the substance and surroundings, the whole system (i.e. the substance *and* the heat source) would continue to deviate from the state of equilibrium instead of tending to reach

it, with the process developing at an ever increasing rate*. Thus, the system would be unstable: even a negligible difference in the temperatures of the substance and the surroundings would cause an avalanche-type increase in the system's lability. On the other hand, similar reasoning for the case when $c_v > 0$ brings us to the logical conclusion that heat transfer between the substance considered and the surroundings, accompanied by an increase in substance temperature, will cease when the temperatures of the surroundings and substance become equal, and a state of equilibrium establishes in the system.

The validity of the condition (6.64) can be assured as follows. Assume that for a substance

$$\left(\frac{\partial p}{\partial v}\right)_T > 0, \tag{5.65}$$

which means that with an increase in volume the pressure in the substance will rise. Just as before, consider a system consisting of two components, the substance and the surroundings; there is heat transfer between the substance and the surroundings, in the course of which the temperatures of the two constituents are the same. Let the pressure of the substance increase in respect to the pressure of the surroundings by an infinitesimal value. This will clearly result in a certain expansion of the substance, and the volume of the surroundings will decrease (they will contract). However, in accordance with condition (5.65), this will cause a further increase in the pressure of the substance considered, which, in turn, will be accompanied by an increase in the volume of the substance, etc. Proceeding at an ever increasing rate, the process will lead to a limitless expansion of the substance at an infinitely large increase in the substance pressure. If we consider another case when the initial pressure of the substance is somewhat lower than the pressure of the surroundings, similar reasonings will lead us to the conclusion that an avalanche-type decrease in the volume of the substance with a drop in substance pressure is inevitable.

Thus, in both cases the system considered will be unstable.

On the other hand, if

$$\left(\frac{\partial p}{\partial v}\right)_T < 0$$

and if the pressure of the substance investigated exceeds the pressure of the surroundings, an expansion of the substance will lead to a decrease in its pressure until the pressure of the substance and that of the surroundings become equal, i.e. until the system reaches a state of equilibrium.**

Let us proceed now to consider the conditions for the equilibrium in thermodynamic systems.

Of the variety of thermodynamic systems differing from each other in the various modes of interactions (conjugation) with the surroundings, of the greatest practical interest are the conditions for equilibrium in an isolated thermodynamic system.

Consider such an isolated system, illustrated in Fig. 5.1. Imagine this system divided into two parts (sometimes referred to as two subsystems) *1* and *2* and find the conditions for equilibrium between the two subsystems.

---

* Since the temperature difference becomes greater and greater.

** There are also states in which $(\partial p/\partial v)_T = 0$, which will be treated in Secs. 6.3 and 6.6.

Inasmuch as the system as a whole is said to be isolated, $V_{sys} = \text{const}$ and $U_{sys} = \text{const}$.

At the same time consider an infinitesimal process proceeding inside the isolated system such that it causes either a change in the volume of each of the subsystems or a change in the internal energy of the subsystems or a change in both volume and internal energy. Let the volume of the first subsystem change by dV_1 and the internal energy by dU_1, and the volume and internal energy of the second substance by dV_2 and dU_2, respectively. Inasmuch as the volume and the internal energy of the entire system remain constant, $dV_1 = -dV_2$ and $dU_1 = -dU_2$; in other words, the change in the volume

Fig. 5.1

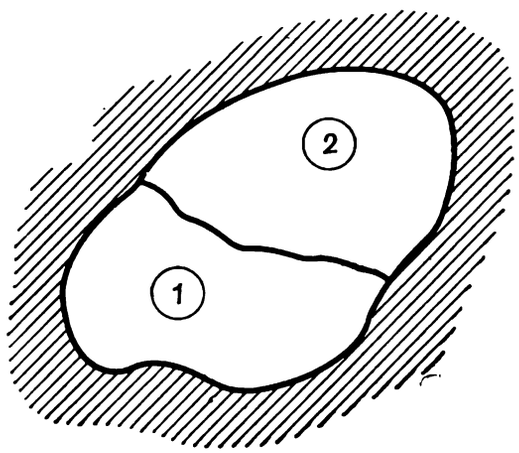

(or internal energy) of the first subsystem is equal to the change in the volume (or internal energy) of the second subsystem.

Previously, an important equilibrium criterion was established for an isolated system: the entropy of an isolated system in thermodynamic equilibrium was shown to preserve a constant (maximum) value, i.e. in a state of equilibrium

$$dS_{sys} = 0. \tag{5.66}$$

Since entropy is an additive quantity, for the case under consideration,

$$S_{sys} = S_1 + S_2, \tag{5.67}$$

and in accordance with Eq. (5.66),

$$dS_{sys} = dS_1 + dS_2 = 0. \tag{5.68}$$

From equation

$$T\,ds = dU + p\,dV$$

it follows that

$$dS = \frac{1}{T}\,dU + \frac{p}{T}\,dV. \tag{5.69}$$

Thus, for subsystem *1*,

$$dS_1 = \frac{1}{T_1}\,dU_1 + \frac{p_1}{T_1}\,dV_1, \tag{5.70}$$

and for subsystem *2*,

$$dS_2 = \frac{1}{T_2}\,dU_2 = \frac{p_2}{T_2}\,dV_2. \tag{5.71}$$

In accordance with Eq. (5.68), we get:

$$\frac{1}{T_1}\,dU_1+\frac{p_1}{T_1}\,dV_1+\frac{1}{T_2}\,dU_2+\frac{p_2}{T_2}\,dV_2=0. \tag{5.72}$$

Equation (5.72) can be presented in the following form:

$$\left(\frac{1}{T_1}-\frac{1}{T_2}\right)dU_1+\left(\frac{p_1}{T_1}-\frac{p_2}{T_2}\right)dV_1=0. \tag{5.73}$$

It was mentioned above that the volume and internal energy of each of the subsystems can change independently from each other, i.e. a process is possible in the course of which the volume of each subsystem changes and their internal energies remain unchanged and, vice versa, a change in the internal energy of the subsystems may not cause a change in their volumes. In other words, the differentials dV_1 and dU_1 are independent, in principle. Then, for the left-hand side of Eq. (5.73) to be equal to zero, the coefficients of the differentials dV_1 and dU_1, present in this equation, should be independently equal to zero, i.e. it is required that

$$\frac{1}{T_1}-\frac{1}{T_2}=0 \tag{5.74}$$

and

$$\frac{p_1}{T_1}-\frac{p_2}{T_2}=0. \tag{5.75}$$

From (5.74) we obtain:

$$T_1 = T_2, \tag{5.76}$$

and from Eq. (5.75), allowing for Eq. (5.76), we get:

$$p_1 = p_2. \tag{5.77}$$

We shall, obviously, come to the same conclusion, irrespective of the number of subsystems into which the system is imagined to be divided. Thus, we arrived at the conclusion that in equilibrium the temperature and pressure are the same in all parts of an isolated system.

The question arises of whether the obtained conclusion is valid for any isolated system or whether in deriving it some simplifying assumptions, restricting the sphere of application of this conclusion, were made.

In fact, a number of restrictions was admitted. Firstly, the combined mathematical statement of the first and second laws of thermodynamics was used not in its most general form

$$T\,dS = dU + dL,$$

but in the form

$$T\,dS = dU + p\,dV, \tag{5.78}$$

i.e. we restricted ourselves to considering the case when the only kind of work done is the work of expansion. If we considered other kinds of work (for instance, a system placed in a potential field; an example is a gas in a gravitational field), we would have other conditions for the equilibrium of a system. It is also easy to find that condition (5.76), requiring that the temperature be the same over the entire volume of a system, would remain unchanged, and only condition (5.77) would change. For instance, for a gas placed in a gravitational field it would follow that the pressure in the column of the gas would increase with diminishing height.

Secondly, we assumed that there exist no peculiarities for the interface separating the two subsystems which should be taken into account. This assumption is not valid when a substance is in different phases in the subsystems; strictly speaking, account should be taken of the surface layer, which, as it will be seen below (Sec. 5.9), has a number of special properties. One more member must then be added, and that is the energy of the surface layer. It will be noted, however, that condition (5.76) will then remain unchanged. As regards condition (5.77), for the case with a flat interface this condition will also remain unchanged; but if the interface is a curved surface, condition (5.77) will be replaced by another one (see Sec. 5.9).

5.4 Conditions for phase equilibrium

Considering in the preceding section the conditions for equilibrium in an isolated single-phase system, we found that the temperature and the pressure are the same in all parts of the system. Now, examining isolated systems consisting of two (or more) phases, let us find the general conditions for phase equilibrium.

In considering an isolated thermodynamic system consisting of two subsystems *1* and *2*, let us use the method followed in the preceding section. The difference will be that now the substance is in two different phases, and the amount of substance in the subsystems can change due to the transfer of substance from one phase into the other.

Thus, for the system considered, $V_{sys} = \text{const}$, $G_{sys} = \text{const}$, and $U_{sys} = \text{const}$; here, G_{sys} is the total quantity of substance in the system. Such a system can be visualized, for instance, as a constant-volume vessel with ideal heat-insulating walls, with one part of the vessel being filled with water, and the other, the upper part, with water vapour.

Hence,

$$V_{sys} = V_1 + V_2, \tag{5.79}$$

$$G_{sys} = G_1 + G_2, \tag{5.80}$$

$$U_{sys} = U_1 + U_2, \tag{5.81}$$

where the subscripts *1* and *2* refer to the first and second phases, respectively.

As it can be seen, in contrast to the previously considered isolated homogeneous system, here, in addition to V and U, the quantity of substance in each of the subsystems (phases) considered is also taken account of.

It follows that

$$dV_1 = -dV_2, \tag{5.82}$$

$$dG_1 = -dG_2, \tag{5.83}$$

$$dU_1 = -dU_2, \tag{5.84}$$

and, just as before,

$$dS_{sys} = 0$$

and

$$S_{sys} = S_1 + S_2.$$

Consequently,

$$dS_{sys} = dS_1 + dS_2 = 0. \tag{5.85}$$

Let us consider now the expression for the total differential of the entropy of subsystem *1*. It is clear that the entropy of this subsystem, S_1, must be considered not only as a function of the subsystem's volume V_1 and its internal energy U_1, as was the case for a single-phase system, but also as a function of the amount of substance in the subsystem, G_1, i.e. $S_1 = f(V_1, U_1, G_1)$. Accordingly,

$$dS_1 = \left(\frac{\partial S_1}{\partial U_1}\right)_{V_1, G_1} dU_1 + \left(\frac{\partial S_1}{\partial V_1}\right)_{U_1, G_1} dV_1 + \left(\frac{\partial S_1}{\partial G_1}\right)_{U_1, V_1} dG_1. \qquad (5.86)$$

As it was shown above [see Eq. (4.40)*],

$$\left(\frac{\partial S}{\partial U}\right)_{V, G} = \frac{1}{T},$$

$$\left(\frac{\partial S}{\partial V}\right)_{U, G} = \frac{p}{T},$$

$$\left(\frac{\partial S}{\partial G}\right)_{U, V} = -\frac{\varphi}{T}.$$

Accordingly, Eq. (5.86) takes the following form:**

$$dS_1 = \frac{1}{T_1} dU_1 + \frac{p_1}{T_1} dV_1 - \frac{\varphi_1}{T_1} dG_1. \qquad (5.87)$$

By analogy, for the entropy of subsystem *2* we have:

$$dS_2 = \frac{1}{T_2} dU_2 + \frac{p_2}{T_2} dV_2 - \frac{\varphi_2}{T_2} dG_2. \qquad (5.89)$$

Substituting the expressions derived for dS_1 and dS_2 into Eq. (5.85) and allowing for the relationships (5.82) through (5.84), we obtain:

$$\left(\frac{1}{T_1} - \frac{1}{T_2}\right) dU_1 + \left(\frac{p_1}{T_1} - \frac{p_2}{T_2}\right) dV_1 - \left(\frac{\varphi_1}{T_1} - \frac{\varphi_2}{T_2}\right) dG_1 = 0. \qquad (5.90)$$

Since the differentials dU_1, dV_1 and dG_1 are mutually independent (on the ground of the reasonings of the preceding section, i.e. of the independence of dV_1 and dU), for the left-hand side of Eq. (5.89) to be equal to zero, the coefficients of dU_1, dV_1 and dG_1 must be equal to zero, i.e.

$$\frac{1}{T_1} - \frac{1}{T_2} = 0, \qquad (5.91)$$

$$\frac{p_1}{T_1} - \frac{p_2}{T_2} = 0, \qquad (5.92)$$

$$\frac{\varphi_1}{T_1} - \frac{\varphi_2}{T_2} = 0. \qquad (5.93)$$

---

* Strictly speaking, Eq. (4.40) has a somewhat different appearance:

$$\left(\frac{\partial s}{\partial u}\right)_v = \frac{1}{T}.$$

However, inasmuch as $S = sG$ and $U = uG$, taking the derivative and considering G = const we obtain:

$$\left(\frac{\partial S}{\partial U}\right)_{V, G} = \frac{1}{T}.$$

This is similar to Eq. (4.41).

** With account taken of Eq. (5.62), for the general case it follows from Eq. (5.86) that

$$T\,dS = dU + p\,dV - \varphi\,dG \qquad (5.88)$$

This is the equation of the second law of thermodynamics for a system with a variable amount of substance.

The first two relationships yield the already known conditions:

$$T_1 = T_2$$

and

$$p_1 = p_2,$$

and Eq. (5.93) provides a new condition

$$\varphi_1 = \varphi_2. \tag{5.94}$$

Thus, if two phases are in equilibrium, the temperatures, the pressures, and the chemical potentials of these phases are the same. Proceeding in similar manner, we get the same result for a system with more than two phases.

5.5 Phase changes

By a *change of phase*, or *phase transition*, we mean the transition of a substance from one phase to another phase that coexists with the first. Speaking of the phases of a pure substance, we usually have in mind the states of aggregation of substance and therefore, we talk of the gas, liquid and solid phases. Strictly speaking, however, the concept of a phase is somewhat narrower than the concept of the state of aggregation: some substances (for instance, ice) have three solid phases. Nevertheless (unless otherwise stated), by the change of phase, or phase transition, we shall mean the transition of a substance from one state of aggregation to another.

Everyday experience shows that one and the same substance can exist in different states of aggregation, depending on external conditions (pressure and temperature). At atmospheric pressure, for instance, water exists in the liquid state at temperatures ranging from 0 to 100 °C. At a temperature below 0 °C and at atmospheric pressure water passes into its solid phase, ice, and upon heating to a temperature above 100 °C it passes into the vapour state. It is also known that the solidification and boiling points of a substance change with pressure.

In different states of aggregation the physical properties of a substance differ, which is the case with the density of a substance, in particular. This difference is traced to the nature of intermolecular interaction. We shall confine ourselves to a simplified treatment, based on the phenomenon of association, i.e. on the formation of complexes of a greater or smaller number of molecules. With a change from the solid to the vapour phase, or with a solid-vapour phase change, the heat of phase transition is expended both to perform compression work and to overcome the intermolecular forces, i.e. to destroy the molecular complexes, the phenomenon being accompanied by a decrease in the density of the substance. When the change of phase involves melting or sublimation, the heat of phase transition is spent to destroy the crystal lattice of the solid, undergoing a change of phase.

Vapour-phase association progresses with rising pressure. Since the liquid phase is under a rather high internal pressure, the decisive factor here is not pressure but temperature, and the association diminishes with the rising of the temperature. That is why a rise in temperature and pressure is accompanied by a decrease in the heat of vapourization.

The solid-vapour phase change, proceeding under very low pressures, is called *sublimation*. From the foregoing it follows that the heat of sublimation

must be rather great (greater than the heat of melting or the heat of vapourization).

A change of phase usually involves an abrupt change in the density of a substance, with the density of the vapour phase being always smaller than the density of the condensed phase* in the event of vapourization and sublimation. As regards melting, various cases are possible for different substances: the density of the solid phase may be either greater or smaller than the density of the liquid.

Phase transition points are classified as follows: the liquid-vapour phase transition point is called the *boiling point* (also referred to as the *condensation point*), the solid-liquid phase transition point is known as the *melting point* (or the *solidification point*), and the solid-vapour phase transition point is referred to as the *sublimation point*.

For a given substance and for each value of the temperature at a given pressure there exists in the liquid or vapour phases a definite composition of the molecular associations. The higher the temperature at a given pressure, the smaller these associations are. But this does not mean that for each temperature there exist associations of only one size: at any temperature there coexist associations of a different size, but the higher the temperature, the greater the number of small associations and the smaller the number of large associations in a phase.

Thus, a rise in temperature is accompanied by a certain break-up of the molecular associations (disintegration of crystals in the solid phase). This process is markedly speeded up near the transition points in which there is an abrupt change in the molecular structure of substance.

Some substances, existing in the solid state, can form not one but several crystalline modifications (for instance, the allotropic modifications of ice). Each of these modifications exists in its own region of properties of state, and if these properties change, the modification changes to another one. Each of these modifications is a phase; the change from one phase to another is accompanied by the addition (or removal) of the heat of transition and by a corresponding change in the substance density. In a solid different phases are frequently encountered, and examples of the existence of different phases in a solid will be treated in Sec. 6.1.

In analyzing phase equilibrium and change-of-phase processes, the so-called *Gibbs phase rule* is of paramount importance. It establishes the relation between the number of intensive variables that can be varied independently, the variables which determine the state of a thermodynamic system in equilibrium (these variables are often referred to as the *degrees of freedom of a system*), the number of phases, and the number of components**.

---

* The liquid and solid phases are sometimes united, giving them the common name of a "condensed phase".

** In Sec. 1.5 components were defined as pure substances, the constituents of a mixture. To be more exact, the name *component of a thermodynamic system* should be given to the component part of the system whose quantity may change irrespectively of the amounts of the other components of the system. From this it follows that if the substances, which are the components of a system, do not interact chemically with each other, the number of system components is equal to the number of pure substances present in the system. If the constituents of a system interact chemically with each other, the number of system components is always less than the number of pure substances; the number of system components is then equal to the number of pure substances minus the number of independent reactions which may take place between them.

A pure substance is evidently a single-component system.

The phase rule may be stated as

$$\psi = n - r + 2, \tag{5.95}$$

where ψ is the number of degrees of freedom (or intensive variables) that can be varied independently in a thermodynamic system, n is the number of components in the system, and r is the number of phases in the system.

The phase rule, which is true for systems with any number of components, is of paramount importance in chemical thermodynamics. As applied to a pure substance (a single-component system, $n = 1$), the phase rule acquires the following form:

$$\psi = 3 - r. \tag{5.96}$$

From Eq. (5.96) it follows that for pure substances in a single-phase system ($r = 1$) the number of degrees of freedom (or the number of intensive variables that can be varied independently) $\psi = 2$. Such independent variables may be p and T, for instance. This means that if, in dealing with such a system, pressure and temperature are given arbitrarily, then all other intensive parameters of the system, such as specific volume, entropy, enthalpy, etc., will be determined unambiguously. Thus, any three intensive thermodynamic quantities determining the state of a given substance (for instance, p, T and V) present a group of variables, two of which can be varied independently, and the third is a function of these two variables.

Consider a system, that consists, as before, of a pure substance, but containing not one but two phases which are in equilibrium with each other. Since for this case $r = 2$, the system possesses only one degree of freedom, meaning that either pressure p or temperature T, for instance, can be the independent variable, determining fully the state of equilibrium for each phase of the system. This conclusion is of great importance. Indeed, if the temperature at which a phase transition takes place is known, it determines unambiguously all other intensive thermodynamic quantities for each of the phases involved, i.e. the pressure at the transition point, the density of the substance in each of the coexisting phases, specific enthalpies and entropies, etc.

The phase transition boundary can be represented on a p-T diagram if we plot the state corresponding to the pressures and temperatures at which the change of phase takes place.

Considering a single-component three-phase system ($r = 3$), we find that the number of the degrees of freedom of this system is zero, this meaning that in a single-component system three phases may be in equilibrium only at a definite temperature and pressure, specific to the given substance. On the p-T diagram, the state in which the three phases coexist will be represented on the phase boundary line by a point (the so-called *triple point*). The triple point, most typical of a pure substance, is that at which the solid, liquid and vapour phases coexist. For water the triple point corresponds to a temperature of 0.01 °C and a pressure equal to 610.8 Pa (0.006 228 kgf/cm^2). It was mentioned above that some substances may have more than one phase in their solid state. Substances of this kind can obviously have several triple points. The triple point at which a substance exists in three states of aggregation is sometimes referred to as the *principal triple point.*

Depicted in Fig. 5.2 is a typical p-T diagram for a substance, on which phase boundaries are drawn. The region of the solid phase of the substance

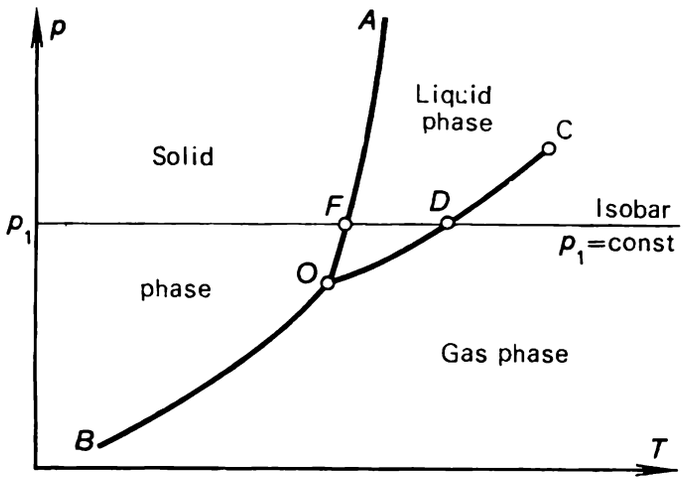

Fig. 5.2

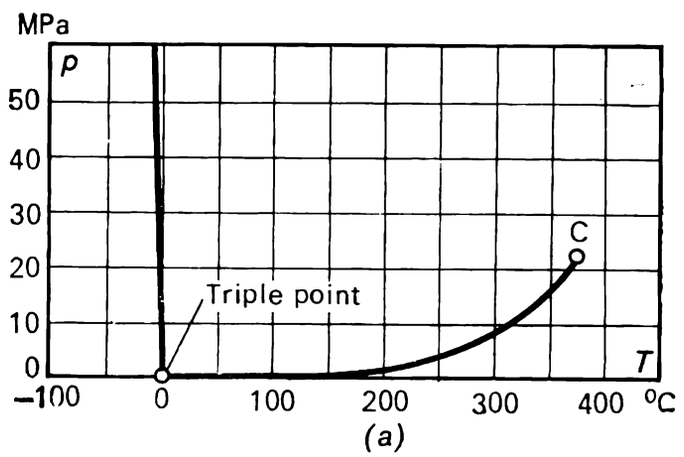

Fig. 5.3

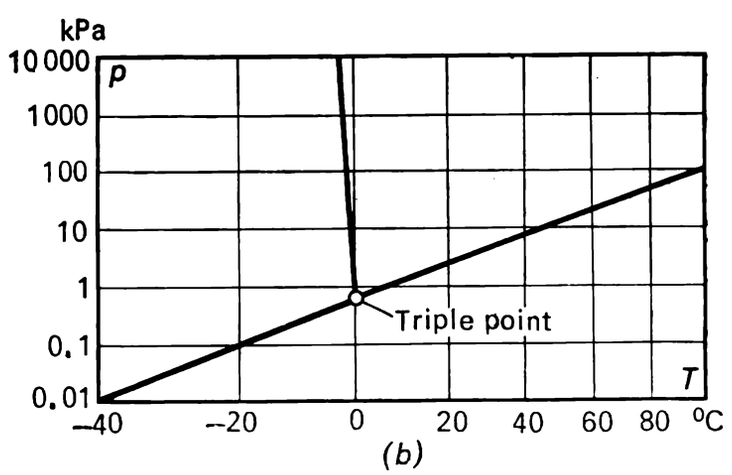

is arranged to the left of boundary line *AOB*. The vapour-phase region is arranged to the right of boundary line *COB*, and the liquid-phase region is found between the boundary lines *OA* and *OC*. It is clear that having available the *p-T* diagram of a substance, we can always determine whether the substance is in the solid, the liquid or the vapour state at any pressure *p* and temperature *T*. From the *p-T* diagram it follows that line *OB* represents the *sublimation boundary* for the substance, line *OA*, the *melting*, or *solidification*, *boundary*, and line *OC* the *boiling*, or *condensation*, *boundary*. The boiling boundary is usually called the *saturation boundary*. Point *O* is the triple point at which the substance coexists in the three states of aggregation.

The sublimation boundary runs down towards the low temperatures region. The melting boundary rises to the region of higher pressures; latest investigations show that the melting (solidification) boundary does not terminate even at ultrahigh pressures (of the order of tens of thousands to hundreds of thousands of atmospheres). The saturation line OC terminates at point C, referred to as the *critical point*. Inasmuch as the properties of various substances differ, the p-T diagrams of different substances differ as well.

From Fig. 5.2 it can be seen that the slope of the sublimation boundary and of the saturation line is positive. This means that the temperature of phase-transition (sublimation and boiling) temperature rises with the increase in

Fig. 5.4

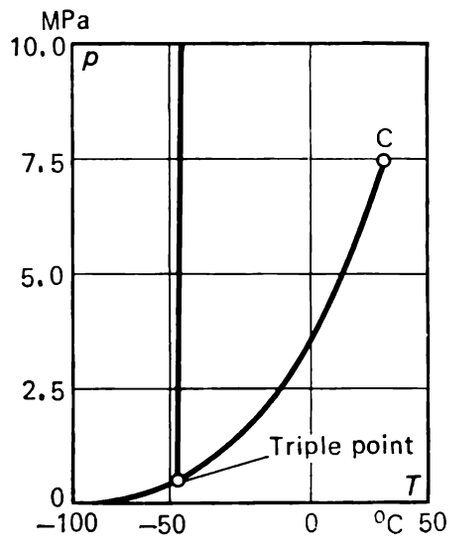

pressure. This regularity holds for all pure substances known. The slope of the solid-liquid phase boundary for different substances may be either positive or negative.

It is also clear from the p-T diagram shown in Fig. 5.2 that the state of a substance changes upon heating at a constant pressure. Moving along the isobar p_1 = const from the solid-phase region, we cross the solid-phase boundary at point F; the substance changes its phase from solid into liquid. If the heating is continued, we cross the saturation line OC at point D; the substance turns into vapour. Further advance along the isobar p_1 = const to the region of higher temperatures corresponds to heating the substance in the vapour (gas) phase. As an illustration, let us present the p-T diagrams for water (Fig. 5.3) and carbon dioxide (Fig. 5.4). The negative slope of the melting, or solid-liquid, boundary is distinctly seen in the first p-T diagram (Fig. 5.3*a* is drawn on a smaller scale than Fig. 5.3*b*).

5.6 The Clausius-Clapeyron equation

Consider two phases, *1* and *2*, that are in equilibrium at pressure p and temperature T. It is known that phases in equilibrium satisfy the condition given by Eq. (5.94):

$$\varphi_1(p, T) = \varphi_2(p, T).$$

Change the temperature of each of the phases by dT, and the pressure by dp. If in changing the temperature we change the pressure in such a way that the two phases continue to be in equilibrium at the new temperature $T + dT$, then, in the new conditions, the potentials of the two phases will, obviously, be equal:

$$\varphi_1 (p + dp,\ T + dT) = \varphi_2 (p + dp,\ T + dT). \tag{5.97}$$

It is clear that the function $\varphi (p + dp,\ T + dT)$ can be expanded in a Taylor's series:

$$\varphi (p + dp, T + dt) = \varphi (p, T) + \left(\frac{\partial \varphi}{\partial p}\right)_T dp + \left(\frac{\partial \varphi}{\partial T}\right)_p dT. \tag{5.98}$$

In accordance with Eqs. (5.34) and (5.35), we have:

$$\left(\frac{\partial \varphi}{\partial p}\right)_T = v, \tag{5.99}$$

$$\left(\frac{\partial \varphi}{\partial T}\right)_p = -s, \tag{5.100}$$

and, consequently, the series (5.98) can be presented in the following form:

$$\varphi (p + dp,\ T + dT) = \varphi (p,\ T) + v\, dp - s\, dT. \tag{5.101}$$

Substituting this expression in the left- and right-hand sides of Eq. (5.97), we get:

$$\varphi_1 (p,\ T) + v_1\, dp - s_1\, dT = \varphi_2 (p,\ T) + v_2\, dp - s_2\, dT.$$

Taking into account that $\varphi_1 (p, T) = \varphi_2 (p, T)$, we obtain the equation of the phase transition boundary, or the *Clausius-Clapeyron equation*:

$$\frac{dp}{dT} = \frac{s_2 - s_1}{v_2 - v_1}. \tag{5.102}$$

This equation relates unambiguously the slope of the phase transition boundary on the p-T diagram with the difference between the entropies of the coexisting phases (s_1 and s_2) and the difference between the specific volumes of these phases (v_1 and v_2). Since, as we know, at a constant temperature a substance undergoes a change of phase at equal phase pressures, i.e. the process proceeds along an isobar with the temperatures of the two phases being equal, then, applied to the given case of p = const, the mathematical formulation of the second law of thermodynamics,

$$T\, ds = di - v\, dp, \tag{4.29}$$

takes the following form:

$$T\, ds = di. \tag{5.103}$$

Integrating equation (5.103) between the limits represented by arbitrary points *1* and *2* and taking into account that temperature T remains constant during the change of phase, we obtain:

$$T (s_2 - s_1) = i_2 - i_1. \tag{5.104}$$

As applied to a phase transition process, the quantity $(i_2 - i_1)$ is the difference between the enthalpies of the coexisting phases and represents the *heat of phase transition*, i.e. the amount of heat absorbed (or released) by a certain quantity of substance (usually 1 kg) in the process of change of phase.

Denoting the heat of phase change by

$$r = i_2 - i_1, \tag{5.105}$$

we obtain Eq. (5.104):

$$s_2 - s_1 = \frac{r}{T}. \tag{5.106}$$

Substituting the value of the difference in entropies in Eq. (5.102), the Clausius-Clapeyron equation becomes

$$\frac{dp}{dT} = \frac{r}{T(v_2 - v_1)}. \tag{5.107}$$

The liquid-vapour phase change

As applied to the liquid-vapour phase change, Eq. (5.107) takes the form

$$\frac{dp_s}{dT} = \frac{r}{T(v'' - v')}, \tag{5.108}$$

where r is the heat of vapourization (latent heat), v'' the specific volume of vapour on the saturation line, v' the specific volume of liquid on the saturation line, and p_s is the equilibrium pressure at the points of the liquid-vapour change of phase.*

Since the density of vapour is always less than the density of liquid, $v'' > v'$, from Eq. (5.108) it follows that for the liquid-vapour phase change the ratio dp_s/dT is always greater than zero, i.e. saturation pressure increases with rising temperature. The Clausius-Clapeyron equation relates the derivative of saturation pressure with respect to temperature to the caloric (r) and thermal (v' and v'') properties of substance on the saturation line. Of great interest are the attempts to solve the Clausius-Clapeyron equation and to find the explicit expression for saturation pressure in relation to temperature.

If vapour pressure is low, the value of the specific volume of vapour is several orders of magnitudes greater than the value of the specific volume of liquid, $v'' \gg v'$, and the difference $(v'' - v')$ in the denominator of the right-hand side of Eq. (5.108) can, therefore, be replaced by v'' with a sufficient degree of accuracy. In addition, at low vapour pressures vapour can be regarded as a good approximation to an ideal gas, for which, in accordance with Clapeyron's equation,

$$v'' = \frac{RT}{p_s}. \tag{5.109}$$

Substituting the above expression into Eq. (5.108), and carrying out simple transformations, we obtain:

$$\frac{d \ln p_s}{dT} = \frac{r}{RT^2}, \tag{5.110}$$

whence

$$\ln p_s = \int \frac{r}{RT^2}\, dT + \text{const}. \tag{5.111}$$

---

* The index s will always refer to values on the saturation line and the indexes *prime* and *double prime*, respectively, to the liquid and vapour in the state of saturation.

Since at low temperatures the heat of vapourization is a slowly varying function of temperature*, the value of r can be considered to be practically independent of temperature in a number of cases. The value of r can then be taken out of the integral sign in Eq. (5.111), and we get:

$$\ln p_s = -\frac{r}{RT} + \text{const.} \tag{5.112}$$

To determine the magnitude of the constant of Eq. (5.112), the saturation pressure p_s must be known at some fixed temperature. The integration constant is usually determined from the standard boiling point (or temperature) $T_{\text{st.b.}}$, i.e. on the boiling point of the liquid at standard atmospheric pressure, p_s = 760 mm Hg = 101.325 kPa, the so-called standard atmosphere. From Eq. (5.112) we get:

$$\ln \frac{p_s}{\text{one standard atm.}} = \frac{r}{R}\left(\frac{1}{T_{\text{st.b.}}} - \frac{1}{T}\right). \tag{5.113}$$

Equation (5.113) is sometimes encountered in the following form:

$$\ln p_s = \frac{r}{R}\left(\frac{1}{T_{\text{st.b.}}} - \frac{1}{T}\right). \tag{5.114}$$

In dealing with formula (5.114), it should be borne in mind that the pressure p_s is expressed here in standard atmospheres; in other words, the value under the logarithm sign is a dimensionless quantity, the ratio of the pressure at the sought point to the standard atmosphere. The values of p_s substituted into Eq. (5.114) cannot obviously be expressed in units other than standard atmosphere, for instance, in units of kPa, kgf/cm^2, etc., since the value $T_{\text{st.b.}}$ in the right-hand side of the equation represents the boiling point of liquid at a pressure equal to one standard atmosphere. But if $T_{\text{st.b.}}$ is replaced by the boiling point at a pressure of, for instance, 100 kPa, 1 kgf/cm^2, or 1 mm Hg, then p_s in the left-hand side of this equation must also be expressed in kPa, kgf/cm^2, mm of Hg, etc.

To put differently, when the integration constant is determined not from the value of $T_{\text{st.b.}}$ but from the known saturation pressure at some other temperature (denoted T^*), Eq. (5.112) takes the form:

$$\ln \frac{p_s}{p_s(T^*)} = \frac{r}{R}\left(\frac{1}{T^*} - \frac{1}{T}\right). \tag{5.115}$$

From Eq. (5.112) it follows that at low pressures the dependence $\ln p_s = f(1/T)$ must be linear. The treatment of experimental data on the dependence p_s versus T for a great number of substances shows the dependence of $\ln p_s$ on $1/T$ to be, in fact, linear, as illustrated in Fig. 5.5.

One more point of interest must be mentioned. As was noted above, Eq. (5.112) is valid only at low pressures. In this connection it would appear that the linear nature of the dependence $\ln p_s = f(1/T)$ holds only for the low pressure region. However, the treatment of experimental data shows that for many substances this linear dependence is also valid in the high pressure region, where vapour cannot be regarded as an ideal gas, the magnitude of v' should not be ignored when compared with the magnitude of v'', and where r depends substantially on temperature. This is often taken as a surprise: Is this a new thermodynamic dependence or not? This can be

* For greater detail on the temperature dependence of r, see Sec. 6.6.

elucidated in the following manner. Multiplying the numerator and denominator of the right-hand side of Eq. (5.108) by p, we obtain:

$$\frac{dp}{dT}=\frac{rp}{Tp(v''-v')}$$

and, denoting $p(v''-v')$ by β, we obtain:

$$\frac{d\ln p}{dT}=\frac{r}{T\beta}. \tag{5.116}$$

Since, in accordance with Eq. (5.105),

$$r=i''-i' \tag{5.117}$$

Fig. 5.5

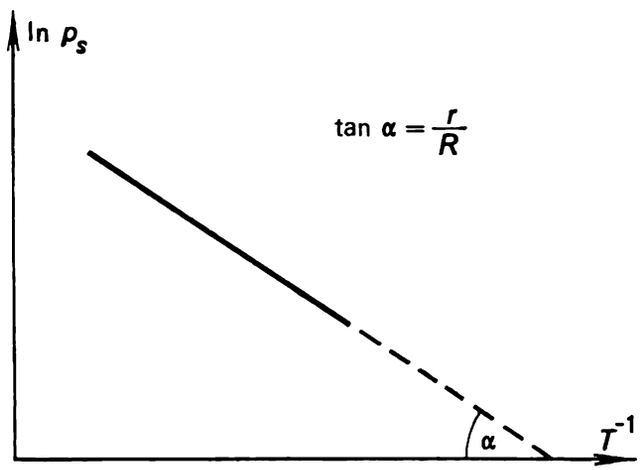

and [see Eq. (2.47a)]
we have:

$$i = u + pv,$$

$$r=(u''-u')+p(v''-v'), \tag{5.118}$$

i.e. the heat of vapourization, or latent heat, can be regarded as consisting of two parts: the difference between the internal energies of the phases involved, $(u''-u')$, and the quantity $p(v''-v')$. The quantity $(u''-u')$, sometimes called the *heat of disintegration*, represents the amount of heat which must be added to a certain quantity of substance so as to overcome the intermolecular forces in the process of vapourization. The quantity $\beta = p(v''-v')$ is obviously the work expended to ensure expansion of the substance from the state with specific volume v' to the state with specific volume v''.* Experimental data have shown that r/β can be described with a sufficient degree of accuracy by the empirical formula

$$\frac{r}{\beta}=\frac{r_0}{TC}, \tag{5.119}$$

where r_0 is the heat of vapourization at a temperature, and C is constant.

* The independent consideration of the quantities $(u''-u')$ and $p(v''-v')$ is, strictly speaking, conventional to a certain degree, since the breakdown of associations is intimately associated with an increase in the specific volume of a substance.

Substituting (5.119) into (5.116), we obtain:

$$\frac{d \ln p}{dT} = \frac{r_0}{CT^2}, \tag{5.120}$$

The structure of Eq. (5.120) makes it similar to Eq. (5.110); the solution of this equation leads to the linear dependence of $\ln p_s$ on $1/T$.

In solving Eq. (5.110) it was assumed that since at low pressures r is a slowly varying function of temperature, it may be considered constant. For better agreement with experimental data, however, it often proves to be of an advantage to take into account the dependence of the heat of vapourization on temperature, using the simplest linear dependence

$$r = a - bT, \tag{5.121}$$

where the constants a and b are calculated from the experimental data on the dependence of the heat of vapourization on temperature.

Substituting (5.121) in Eq. (5.111) and solving the latter, we obtain:

$$\ln p_s = -\frac{1}{R}\left(\frac{a}{T} + b \ln T\right) = \text{const}, \tag{5.122}$$

whence

$$\ln \frac{p_s}{p_s(T^*)} = \frac{a}{R}\left(\frac{1}{T^*} - \frac{1}{T}\right) + \frac{b}{R} \ln \frac{T^*}{T}, \tag{5.123}$$

where $p_s\ (T^*)$ is the known saturation pressure at the temperature T^*.

The solid-liquid phase change

When applied to a solid-liquid phase change (melting), Eq. (5.107) can be presented as

$$\frac{dp}{dT} = \frac{\lambda}{T(v_l - v_s)}, \tag{5.124}$$

where λ is the heat of fusion or heat of melting, v_l the specific volume of the liquid phase on the melting line, and v_s is the specific volume of the solid phase on the melting line.

Since the densities of a substance in the liquid and solid phases are quantities of the same order of magnitude, v_l and v_s are usually close to each other, and two cases are possible: (1) the density of the solid is greater than that of the liquid ($v_l > v_s$), and (2) the density of the solid is smaller than that of the liquid ($v_l < v_s$). It is clear from Eq. (5.124) that for the first case $dp/dT > 0$, i.e. the fusion point rises with rising pressure. For the second case the quantity dp/dT, as can be seen from Eq. (5.124), happens to be negative, i.e. the fusion point lowers with rising pressure. Thus, for some substances (water, for instance) the slope of the melting boundary on the p-T diagram is negative (see Fig. 5.3).

The solid-vapour phase change

When applied to a solid-vapour phase change, Eq. (5.107) takes the following form:

$$\frac{dp}{dT} = \frac{L}{T(v_v - v_s)}, \tag{5.125}$$

where L is the heat of sublimation, v_v the specific volume of vapour on the sublimation line, and v_s is the specific volume of the solid.

Since sublimation usually takes place at low pressures (below the pressure at the triple point), the specific volume of the forming vapour on the sublimation line is several orders of magnitude greater than the specific volume of the solid phase. Therefore, in accordance with Eq. (5.125), for the solid-vapour phase change the quantity dp/dT is greater than zero, which means that the slope of the sublimation line in the p-T diagram is positive.

It is clear that in the process of sublimation $v_v \gg v_s$ and the value v_s in Eq. (5.125) can be ignored. The specific volume of vapour on the sublimation line is described very accurately by Clapeyron's equation

$$v_v = \frac{RT}{p},$$

and Eq. (5.125) takes the form

$$\frac{d \ln p}{dT} = \frac{L}{RT^2}. \tag{5.126}$$

Knowing the temperature dependence for the heat of sublimation, we can solve Eq. (5.126).

In conclusion, one more interesting application of the Clausius-Clapeyron equation will be indicated. As was already mentioned in Sec. 3.4, of great importance is the introduction of corrections to any empirical (practical) temperature scale so as to reduce this scale to the thermodynamic temperature scale, i.e. to establish a thermodynamic temperature scale based on a given concrete empirical temperature scale (for instance, on that of a gas thermometer). The equation for the corrections to the International Temperature Scale, used to convert it into the thermodynamic scale, was given in Chapter 3. But how can these corrections be determined? These corrections, i.e. the difference between the temperatures on the thermodynamic, T, and empirical, T^*, scales, or, in other words, the dependence $T = f(T^*)$, can be determined by various methods, one of which is based on the Clausius-Clapeyron equation.

As was already mentioned repeatedly, the thermodynamic temperature is present in all thermodynamic relationships, including the Clausius-Clapeyron equation (5.108), which, when applied to the liquid-vapour phase change, takes the following form:

$$\frac{dT}{dp} = \frac{T(v'' - v')}{r}. \tag{5.108a}$$

If the values of v', v'' and r are determined experimentally, Eq. (5.108a) can obviously be used to calculate dT/dp.

On the other hand, if we have experimental data on the dependence of the saturation pressure p_s on temperature (where temperature measurements are taken with the aid of a thermometer graduated according to the empirical scale, i.e. T^* is measured), the magnitude of the derivative dT^*/dp can be calculated by means of graphical or numerical methods.

The value of dT/dp, calculated from Eq. (5.108a), is evidently related with dT^*/dp via the relationship

$$\frac{dT}{dp} = \frac{dT}{dT^*} \frac{dT^*}{dp}.$$

Substituting the value of dT/dp from relation (5.108a), we obtain:

$$\frac{dT}{T}=\frac{v''-v'}{r}\frac{dp}{dT^*}dT^*.$$

Integrating this relationship, we have:

$$\ln\frac{T_2}{T_1}=\int\limits_{T_1^*}^{T_2^*}\frac{v''-v'}{r}\frac{dp}{dT^*}dT^*,$$

whence

$$T_2=T_1\exp\left(\int\limits_{T_1^*}^{T_2^*}\frac{v''-v'}{r}\frac{dp}{dT^*}dT^*\right).$$

Thus, if some thermodynamic-scale temperature T_1, corresponding to the temperature T_1^*, is known, then, having experimental data on v', v'', r and p in the temperature interval from T_1^* to T_2^*, the derived equation can be used to calculate the thermodynamic temperature T_2, corresponding to the temperature T_2^*. If T_1 is assumed to be equal to T_1^* at some point (the only fixed point), this equation can be used to find the correction for any temperature on the empirical temperature scale.

5.7 Phase stability

Let us dwell on some problems pertaining to phase stability.

Consider the dependence of the chemical potential of a substance on the pressure of each of the two phases at constant temperature. A dependence of this kind is shown graphically in Fig. 5.6. Since

$$\left(\frac{\partial\varphi}{\partial p}\right)_T=v,$$

in Fig. 5.6 the curve *1* pertains to the phase with a greater density (smaller v), and curve *2* to the phase with a smaller density. It will also be noted that in the φ and p coordinates the convexities of the isotherms are always facing upward, since, as it is clear from Eq. (5.99),

$$\left(\frac{\partial^2\varphi}{\partial p^2}\right)_T=\left(\frac{\partial v}{\partial p}\right)_T, \tag{5.127}$$

and the quantity $(\partial v/\partial p)_T$, according to Eq. (5.64), is always negative.

Assume that curve *1* pertains to the liquid phase (φ_l), and curve *2* to the saturated-vapour phase (φ_v). It is clear that point s, at which the curves *1* and *2* intersect, i.e. at which $\varphi_1=\varphi_2$, is the point of phase equilibrium for the given substance (the pressure is p_s).

In accordance with the additivity rule, the expression for the isobaric-isothermal potential of a two-phase system can evidently be written as

$$\Phi_{sys}=\varphi_l G_l+\varphi_v G_v. \tag{5.128}$$

Consider a system, comprising two phases at the same pressure and temperature* (points a and b on the isobar p_1, Fig. 5.6). If this state is not a state of equilibrium for the system considered, hence this isobaric-isothermal system is capable of undergoing a process leading to a change in the system potential Φ. Since the pressure and temperature are constant, it is clear that φ_l and φ_v remain constant during this process, so that $d\varphi_l = 0$ and $d\varphi_v = 0$. It follows that the quantity Φ_{sys} can change only at the expense of G_l and G_v, and from Eq. (5.127) we obtain:

$$d\Phi_{sys} = \varphi_l\, dG_l + \varphi_v\, dG_v. \tag{5.129}$$

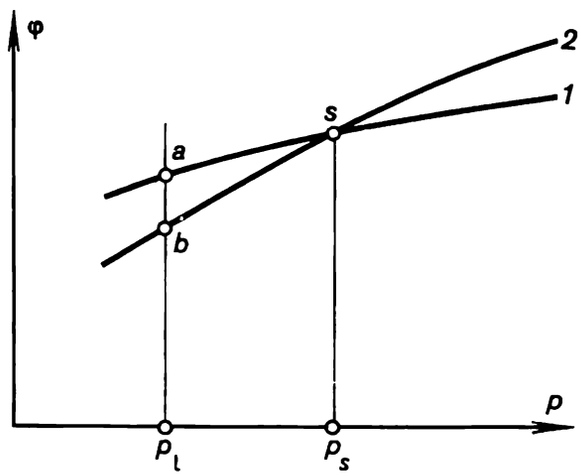

Fig. 5.6

At the same time it is known that

$$G_{sys} = G_l + G_v = \text{const}, \tag{5.130}$$

and, consequently,

$$dG_l = -dG_v. \tag{5.131}$$

Equation (5.129) acquires then the following form:

$$d\Phi_{sys} = (\varphi_v - \varphi_l)\, dG_v \tag{5.132}$$

Since in the process of coming into equilibrium the potential Φ of an isobaric-isothermal system always diminishes, tending to a minimum (see Sec. 5.2), i.e. $d\Phi_{sys} < 0$, the sign of the differential dG_v is determined by the sign of the difference $(\varphi_v - \varphi_l)$.

From Fig. 5.6 it is clear that to the left of point s, i.e. at $p < p_s$ we have $\varphi_v < \varphi_l$ and, consequently, dG_v must be greater than zero. This means that in this system there will be mass transfer from the liquid phase to the

* It will be shown that under certain conditions the existence of the so-called metastable states of substance is possible (the concept of such a state was introduced in Sec. 5.1), i.e. states in which, for instance, vapour can be cooled at a given constant pressure to a temperature below the condensation point (so that no condensation would take place) or liquid can be heated to a temperature above the boiling point or liquid can be cooled below the solidification temperature. This fact permits us to consider a liquid and a vapour existing simultaneously at a pressure exceeding somewhat (or lying somewhat below) the saturation pressure at the given temperature, p_s, i.e. curves *1* and *2* exist to the left and to the right of point s in Fig. 5.6.

vapour phase. To the right of point s, i.e. at $p > p_s$, $\varphi_v < \varphi_l$ and, consequently, $dG_v < 0$; there is mass transfer then from the vapour phase into the liquid phase. Thus,

if $\varphi_v > \varphi_l$, then $dG_v < 0$ and, consequently, the stable state of the system is the liquid state;

if $\varphi_v < \varphi_l$, then $dG_v > 0$ and, consequently, the stable state of the system is the vapour phase.

The foregoing permits the unambiguous conclusion that with given p and T, the more stable of the two phases is the phase whose chemical potential is smaller.

5.8 Phase changes at unequal phase pressures

Consider the conditions of phase equilibrium for the case when each of the two coexisting phases is at a different pressure. Such cases are not infrequent in practical applications, for instance, the case of an inert gas exerting pressure on a liquid at such a temperature that vapour pressure on the top of the liquid is comparatively low. It is clear that the vapour can then be considered with a good degree of approximation as an ideal gas, whose properties are in no way affected by the presence of the inert gas. On the other hand, the inert gas transmits its pressure to the liquid. Thus, the liquid and its vapour will be under a different pressure.

Let us determine the conditions for thermodynamic equilibrium in an isolated system with unequal phase pressures. Consider the case of liquid-vapour equilibrium when the supplementary pressure on the liquid is provided by an inert gas. (The results can be shown to be valid also for cases when the supplementary pressure is created by other methods.)

This system can be visualized in the form of a closed heat-isolated vessel with rigid walls, with two phases of a substance, the liquid phase and the saturated vapour phase. On the top of the liquid there is not only the vapour phase but also the inert gas, imparting an additional pressure p^* on the liquid. It will be emphasized that the behaviour of the vapour and of the inert gas complies with Dalton's law.

Analyzing the conditions for phase equilibrium in such a system with the aid of the method applied in Sec. 5.4, we can easily obtain the following relations for phase equilibrium in a system characterized by unequal phase pressures:

$$T_l = T_v, \tag{5.133}$$

$$\varphi_l = \varphi_v, \tag{5.134}$$

$$p_l = p_v + p^*. \tag{5.135}$$

The relations, or conditions, (5.133) and (5.134) are in agreement with the previously derived conditions (5.76) and (5.94). The condition (5.135) also stands to reason: the difference between the pressures of the two coexisting phases is equal to the supplementary pressure exerted on one of the phases.

These conditions are true not only for the case of liquid-vapour equilibrium, but also for other cases of phase equilibrium, such as solid-liquid and solid-vapour equilibrium.

Consider now the following interesting problem. Will the pressure on the second phase change (and to what extent) if the pressure on the top of

the first phase changes, on condition that the temperature is constant and equilibrium is preserved?

Consider a two-phase system. Let the initial phase pressures be equal to p_0 and assume that the system is in thermodynamic equilibrium. It is clear then that

$$\varphi_1 (p_0, T) = \varphi_2 (p_0, T). \tag{5.136}$$

Let the pressure exerted on the first phase increase by dp_1, with the temperature T remaining constant. Assume that thermodynamic equilibrium sets in again between the two coexisting phases, with the pressure of the second phase changing by dp_2 (we do not know whether dp_2 is equal or not equal to zero). If the two phases are in equilibrium, it is clear that

$$\varphi_1 (p_0 + dp_1, T) = \varphi_2 (p_0 + dp_2, T). \tag{5.137}$$

Expanding the function $\varphi (p + dp, T)$ into the Taylor series, we obtain:

$$\varphi_1 (p_0 + dp_1, T) = \varphi_1 (p_0, T) + \left(\frac{\partial \varphi_1}{\partial p_1}\right)_T dp_1, \tag{5.138}$$

$$\varphi_2 (p_0 + dp_2, T) = \varphi_2 (p_0, T) + \left(\frac{\partial \varphi_2}{\partial p_2}\right)_T dp_2, \tag{5.139}$$

and, taking into account that $\left(\frac{\partial \varphi}{\partial p}\right)_T = v$, Eq. (5.137) reduces to

$$\varphi_1 (p_0, T) + v_1 dp_1 = \varphi_2 (p_0, T) + v_2 dp_2. \tag{5.140}$$

With account taken of (5.136), from Eq. (5.140) we find that

$$v_2 dp_2 = v_1 dp_1, \tag{5.141}$$

whence

$$\left(\frac{\partial p_2}{\partial p_1}\right)_T = \frac{v_1}{v_2}. \tag{5.142}$$

This important equation, first derived by the English physicist J. H. Poynting, leads us to an unexpected result, showing that if the pressure of one of the phases of the equilibrium system increases, the pressure of the other phase will also increase, with the increase in the pressure of the second phase being as many times smaller (or greater) as the specific volume of the second phase is smaller (or greater) than the specific volume of the first phase.

So, for instance, if the liquid is subjected to the supplementary pressure exerted by an inert gas, the pressure of the saturated vapour of this liquid will increase. If pressure is exerted upon a solid phase which is in equilibrium with a liquid, liquid phase pressure will rise as well.

Since at low pressures (considerably lower than the pressure at the critical point) the density of a vapour is much smaller than the density of a liquid, an increase in the liquid phase pressure is accompanied by a slight increase in the vapour phase pressure. (For instance, the specific volume of water at atmospheric pressure $v' = 0.001$ m³/kg, the specific volume of vapour $v'' = 1.7$ m³/kg and, consequently, $\Delta p'' \cong \cong 0.0006\, \Delta p'$.) Things are different for solid-liquid equilibrium: since the densities of solid and liquid phases are of the same order of magnitude, the values of Δp_1 and Δp_2 are practically the same (so, for water at atmospheric pressure $v_w = 1.00$ cm³/g, and for ice $v_{ice} = 1.09$ cm³/g; hence, $\Delta p_w \cong \cong 1.09 \Delta p_{ice}$).

It should be emphasized that Poynting's equation is valid only for the case when T = const. In other words, if the pressure exerted on one of the phases in equilibrium rises, the pressure in the other phase will increase only if the temperatures of the coexisting phases remain constant. But if no such limitation is imposed, then an increase in the pressure exerted on one of the phases should not be necessarily accompanied by a change in the pressure of the second phase (the system has now an extra degree of freedom). This case of phase equilibrium is described by Eq. (5.152) given below.

One more important fact must be noted. If the two phases were under the same pressure p_0, and then the pressure of one of the phases was increased to p_1, the difference between the two pressures acting now on the two phases, p^*, should not be taken to be equal to $(p_1 - p_0)$: in accordance with Poynting's equation, the pressure in the other phase must also inevitably increase (to $p_2 > p_0$) and, consequently, the difference $p^* = p_1 - p_2$ will always be smaller than the supplementary pressure exerted on the first phase $(p_1 - p_0)$.

The quantities p_1, p_2, p^* and p_0 can be easily related.

In accordance with the foregoing, it is clear that

$$p^* = \Delta p_1 - \Delta p_2, \tag{5.143}$$

where $\Delta p_1 = p_1 - p_0$ and $\Delta p_2 = p_2 - p_0$ represent the increase in the pressure of each phase due to a rise in the pressure of the first phase to p_1.

In accordance with Poynting's equation,

$$\Delta p_2 = \int_{p_0}^{p_1} \frac{v_1}{v_2}\, dp_1. \tag{5.144}$$

If the ratio $\frac{v_1}{v_2}$ is not affected greatly by a change in p_1 (which is usually true), then it can be assumed with a good approximation that

$$\Delta p_2 = \frac{v_1}{v_2} \Delta p_1. \tag{5.145}$$

With account taken of (5.145), Eq. (5.143) takes the form

$$p^* = \frac{v_2 - v_1}{v_2} \Delta p_1 \tag{5.146}$$

or, which is the same,

$$p^* = \frac{v_2 - v_1}{v_1} \Delta p_2. \tag{5.147}$$

This implies that

$$p_1 = p_0 + \frac{v_2}{v_2 - v_1} p^* \tag{5.148}$$

and

$$p_2 = p_0 + \frac{v_1}{v_2 - v_1} p^*. \tag{5.149}$$

Equations (5.148) and (5.149) relate p_1, p_2, p^* and p_0.

Let us find the temperature derivatives of the unequal pressures p_1 and p_2 of the coexisting phases, making use of the method previously employed in deriving the Clausius-Clapeyron equation.

In accordance with Eq. (5.134), for phases in equilibrium

$$\varphi_1 (p_1, T) = \varphi_2 (p_2, T). \tag{5.150}$$

Change the temperature of each phase by dT, the pressure of the first phase by dp_1, and the pressure in the second phase by dp_2. If the change in temperature causes a change in the pressures p_1 and p_2 such that the phases considered remain in equilibrium, it is clear that under these new conditions the chemical potentials of the phases involved will be equal to each other:

$$\varphi_1 (p_1 + dp_1, T + dT) = \varphi_2 (p_2 + dp_2, T + dT). \tag{5.151}$$

Expanding the functions in this relation in Taylor series (5.98) and taking Eqs. (5.99), (5.100), (5.106) and (5.150) into account, from equation (5.151) we obtain:

$$v_2 \frac{dp_2}{dT} - v_1 \frac{dp_1}{dT} = \frac{r}{T}. \tag{5.152}$$

This important relation, similar to the Clausius-Clapeyron equation, relates the temperature derivatives of the pressures of two phases coexisting at different phase pressures. If the pressures of the coexisting phases are the same, Eq. (5.152) reduces to the conventional Clausius-Clapeyron equation (5.107). If T = const, this equation takes the form of and becomes Poynting's equation (5.142).

5.9 Phase changes under curved surfaces

When the interface is not a flat surface but a curved one, a pressure difference due to surface tension appears between the phases.

It is known from elementary physics that the so-called *surface tension* acts at the interface, the force tending to reduce the area of liquid at the interface to a minimum. It will be recalled that by definition the surface tension σ is the name given to the force acting on unit length of the perimeter of the area; these forces, normal to the perimeter and tangent to the interface, are depicted by arrows in Fig. 5.7, which shows an elementary section of an interface. Since with a flat interface the surface tension forces, acting at all points of the perimeter of the section (Fig. 5.7a), lie in one plane, the resultant of these forces is evidently zero. Things are different with a curved interface. As can be seen from Fig. 5.7*b*, the surface tension forces, acting at various points of the perimeter, lie in different planes, and their resultant is no more equal to zero, the resultant evidently being the larger the greater the curvature of the phase interface is. It can be easily seen that the resultant force acts in the direction of the concave side of the curved surface. Thus, the phase under the concave side of the interface will be affected by an additional pressure due to surface tension.

Let us find how this force is related to the magnitude of the surface tension and to the curvature of the interface. Consider a small square on the curved surface (Fig. 5.8), and calculate the resultant of the surface tension forces acting on the sides AB and CD of the perimeter. The force acting on side AB is

$$F_{AB} = \sigma l_{AB}, \tag{5.153}$$

where l_{AB} is the length of side AB. By analogy, the force acting on side CD is

$$F_{CD} = \sigma l_{CD}. \tag{5.154}$$

The resultant of the forces F_{AB} and F_{CD} is the sum of the projections of the vectors representing F_{AB} and F_{CD} on the line OO', which is normal to

Fig. 5.7

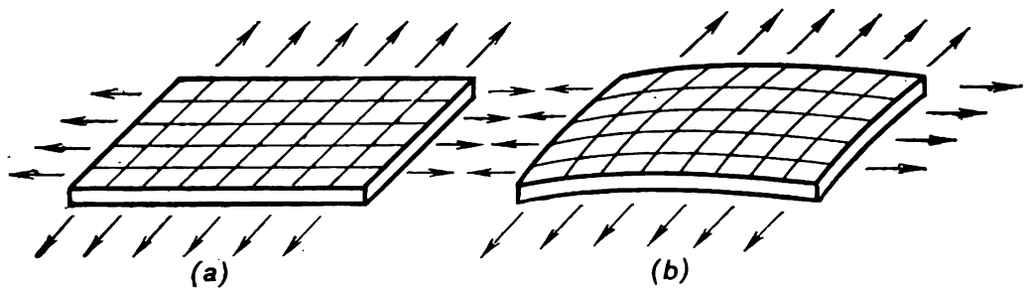

Fig. 5.8

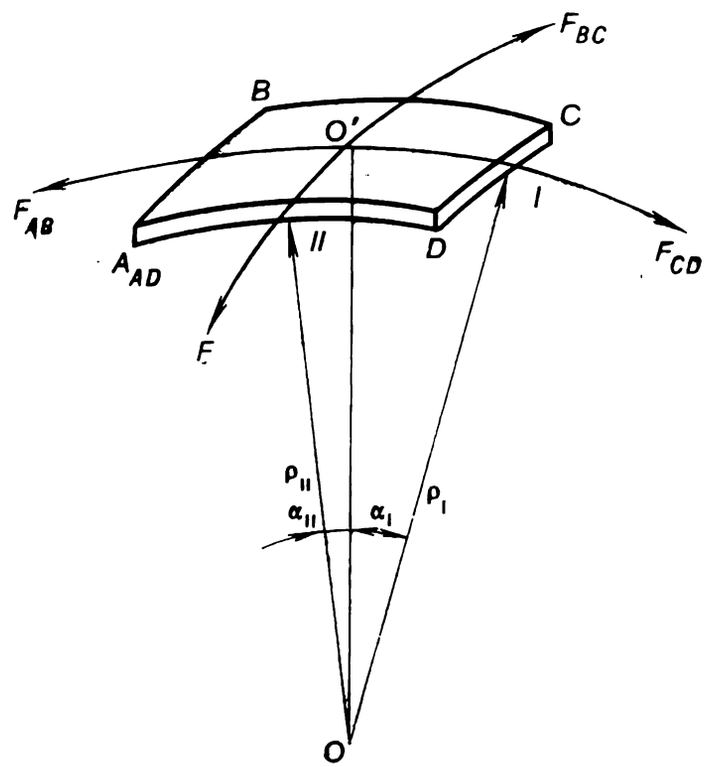

the section of the surface at its centre. This resultant force is equal to

$$F_{AB} \sin \alpha_I + F_{CD} \sin \alpha_{II},$$

where α_I is the angle between the normal OO' and the radius of curvature of our section of the interface, in the plane of the square with the sides AB and CD, drawn to point I.

Inasmuch as

$$l_{AB} = l_{CD} = l, \tag{5.155}$$

it is clear that

$$|F_{AB}| = |F_{CD}| \tag{5.156}$$

and, consequently, the resultant of the forces F_{AB} and F_{CD} will be

$$2\sigma l \sin \alpha_{\mathrm{I}}.$$

Analogously, the resultant of forces F_{AD} and F_{BC} will be

$$2\sigma l \sin \alpha_{\mathrm{II}},$$

where α_{II} is the angle between the normal OO' and the radius of curvature of our section of the interface, in the plane of the square with the sides AD and BC, drawn to point II.

Hence, the resultant of the forces F_{AB}, F_{BC}, F_{CD}, F_{AD}, i.e. of all surface tension forces acting on the section of the interface, will be equal to:

$$F = 2\sigma l (\sin \alpha_{\mathrm{I}} + \sin \alpha_{\mathrm{II}}). \tag{5.157}$$

As can be seen from Fig. 5.8,

$$\sin \alpha_{\mathrm{I}} = \frac{l/2}{\rho_{\mathrm{I}}} \text{ and } \sin \alpha_{\mathrm{II}} = \frac{l/2}{\rho_{\mathrm{II}}} \tag{5.158}$$

With account taken of relationships (5.158), Eq. (5.157) takes the following form:

$$F = \sigma l^2 \left(\frac{1}{\rho_{\mathrm{I}}} + \frac{1}{\rho_{\mathrm{II}}} \right). \tag{5.159}$$

Dividing the force F by the area of the section considered (this area can easily be seen to be l^2), we obtain the magnitude of the supplementary pressure due to surface tension forces:

$$p^* = \sigma \left(\frac{1}{\rho_{\mathrm{I}}} + \frac{1}{\rho_{\mathrm{II}}} \right). \tag{5.160}$$

This equation, first derived by Laplace, relates the difference between phase pressures with surface tension and the curvature of the interface (it will be noted that the Laplace equation can also be derived in a purely thermodynamic way).

Present in Laplace's equations are two radii of curvature ρ_{I} and ρ_{II}. This can be easily justified. From analytic geometry it is known that the curvature of a surface is characterized by two radii that determine the curvature of this surface in two mutually perpendicular cross sections.

The curvature of an interface will be assumed to be positive when the phase of a greater density is arranged on the concave side of the interface, and negative when this phase lies on the convex side of the interface.

It follows from the Laplace equation that for a flat interface (i.e. for an interface whose radius of curvature is infinitely large) the supplementary pressure p^* is equal to zero, as could be expected.

The curvature of a spherical interface is the same in any section:

$$\rho_{\mathrm{I}} = \rho_{\mathrm{II}} = \rho, \tag{5.161}$$

where ρ is the radius of the sphere. From Eq. (5.161) it is clear that for a sphere the Laplace equation takes the form

$$p^* = \frac{2\sigma}{\rho}. \tag{5.162}$$

Consider a spherical drop of liquid in equilibrium with its saturated vapour at some temperature T_0. If the liquid-vapour interface (or boundary) were flat, the pressure of the liquid would be equal to the vapour phase pressure; this would be the pressure p_0, the saturation pressure at temperature T_0. However, for a spherical drop, the liquid phase is acted upon by a supplementary pressure due to surface tension forces. According to Poynting's equation (see Sec. 5.8), the presence of the supplementary pressure will cause an increase in the vapour phase pressure. If liquid phase pressure is denoted by p_l, and the pressure of the vapour in the space above the drop of liquid by p_v, then from Eqs. (5.148) and (5.149) it follows that for the case considered (a drop with radius ρ) we have:

$$p_l = p_0 + \frac{v_v}{v_v - v_l}\frac{2\sigma}{\rho}, \tag{5.163}$$

$$p_v = p_0 + \frac{v_l}{v_v - v_l}\frac{2\sigma}{\rho}. \tag{5.164}$$

If vapour pressure is low and, consequently, the specific volume is large compared with the specific volume of the liquid, so that the value of v_l can be ignored in comparison with v_v, these equations can be presented in the following form:

$$p_l = p_0 + \frac{2\sigma}{\rho}, \tag{5.165}$$

$$p_v = p_0 + \frac{v_l}{v_v}\frac{2\sigma}{\rho}. \tag{5.166}$$

Finally, if vapour pressure is so low that the vapour can be considered as an ideal gas, then

$$v_v = \frac{RT}{\rho_v}$$

and, consequently, from Eq. (5.166) we obtain:

$$p_v = p_0 + \frac{v_l p_v}{RT}\frac{2\sigma}{\rho}, \tag{5.167}$$

whence

$$p_v = \frac{p}{1 - \frac{v_l}{RT}\frac{2\sigma}{\rho}}. \tag{5.168}$$

Taking account of surface tension forces is essential in analyzing various phase change processes proceeding in the presence of a curved phase interface.

6

Thermodynamic properties of substances

Knowing the main regularities inherent to thermodynamic systems and being able to use the differential equations of thermodynamics, we can proceed now to consider the thermodynamic properties of substances, concentrating upon the analysis of the nature of the dependences relating the different properties of a substance. We shall consider the thermal and caloric properties, such as the specific volume, enthalpy, internal energy, entropy, heat capacities and the thermal coefficients in each of the three states of aggregation of substances and on the phase change boundaries.

6.1 Thermal and caloric properties of solids

From the thermodynamic viewpoint one of the most characteristic properties of solids is their exceptionally poor compressibility.

The *coefficient of isothermal compressibility* of most substances existing in the solid state of aggregation, $\beta = -\frac{1}{v}\left(\frac{\partial v}{\partial p}\right)_T$, does not usually exceed 10^{-10} Pa^{-1}. From this it follows that in most calculations the compressibility of solids can be ignored.

The specific volume of a solid changes considerably only when the solid is compressed to tremendous pressures (up to thousands of megapascals and

higher). The change in the volume of various substances,

$$\Delta v = \int_{1\,\mathrm{kgf/cm^2}}^{p} \left(\frac{\partial v}{\partial p}\right) dp,$$

is plotted as a function of pressure at room temperature in Fig. 6.1 (plotted in the graph is the relative value $\Delta v/v_0$, where v_0 is the specific volume of

Fig. 6.1

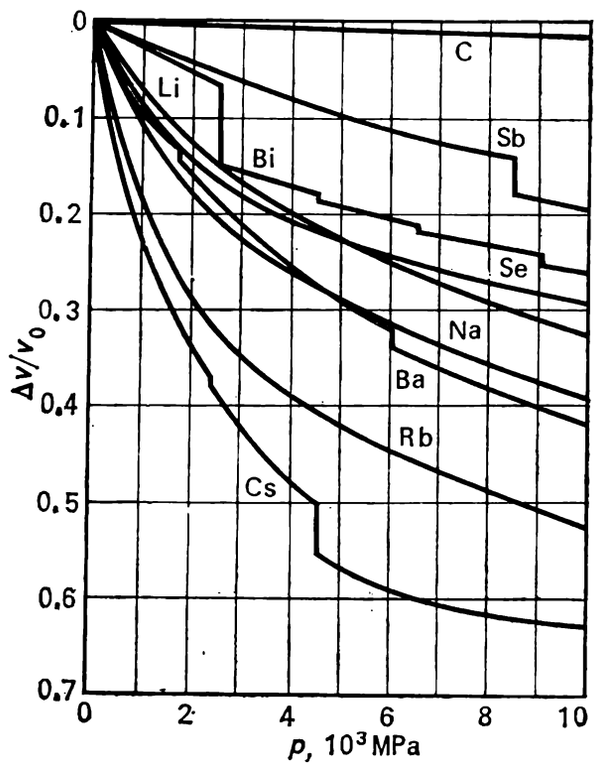

solids at standard atmospheric pressure).* It is of interest to note the unusually small compressibility of diamond; with an increase in pressure to 10 000 MPa ($\cong$100 000 kgf/cm²) the specific volume of the mineral diminishes only by about 1.5%.

All solids expand upon heating, and, consequently, the *coefficient of volume expansion*, $\alpha = \frac{1}{v}\left(\frac{\partial v}{\partial T}\right)_p$, is always positive.** The magnitude of the coefficient α is about 10^{-5} K^{-1}.***

Together with the coefficient of volume expansion, characterizing the change of volume with temperature, often applied to solids is the so-called

* Since the volume of a solid undergoing compression decreases, the value $\Delta v/v_0$, similar to β, is always negative. The vertical lines on the curves $\Delta v/v_0 = f(p)$ correspond to an abrupt change in the volume of a solid at the points of phase change from one crystalline modification into another.

** It should be stipulated that upon heating of highly anisotropic crystals the expansion in the direction of one crystallographic axis is sometimes accompanied by a slight decrease of dimensions in the direction of other crystallographic axes.

*** This regularity is not valid for solids in which changes of phase take place (ferromagnetics, ferroelectrics, superconductors, etc.) near the phase change points.

coefficient of linear expansion,

$$\alpha_l = \frac{1}{l}\left(\frac{\partial l}{\partial T}\right)_p, \tag{6.1}$$

which characterizes the change of the linear dimensions (length) of a solid with temperature. It can be easily proved that for isotropic solids

$$\alpha \cong 3\alpha_l. \tag{6.2}$$

The values of α_l for some solids (at 0 °C) are given in Table 6.1.

Table 6.1 Coefficient of linear expansion α_l for some common substances

Substance	α_l (10^{-6} K^{-1})	Substance	α_l (10^{-6} K^{-1})
Aluminium	23	Nickel	12.5
Copper	16.1	Potassium	84
Diamond	0.91	Silicon	2.3
Germanium	5.5	Silver	18.3
Gold	14.2	Sodium	72
Iron	11.7	Tungsten	4.3
Lead	28.3		

It should be noted that the coefficient of volume expansion of some solids is very small, meaning that the change of the dimensions of these substances with temperature can be ignored (for instance, the coefficient of volume expansion of Invar, one of the iron-nickel alloys, is about 0.6×10^{-6} K^{-1} in the temperature range from 0 to 150° C, which is about 20 times smaller than for iron and nickel). This property of materials is made use of in engineering in dilatometers, controllers whose principle of operation is based on the difference in the expansion of two materials, and also in creating instruments, whose dimensions should possibly remain unchanged (for instance, Invar is used for making length standards, parts of clocks, etc.).

For solids the dependence of the coefficient of expansion on temperature is usually rather slight, so, in engineering, the coefficient of volume expansion can be considered to a first approximation a constant quantity, independent of temperature. If $\alpha = \frac{1}{v}\left(\frac{\partial v}{\partial T}\right)_p$ is independent of temperature ($\alpha =$ const), then, taking into account that

$$\frac{1}{v}\left(\frac{\partial v}{\partial T}\right)_p = \left(\frac{\partial \ln v}{\partial T}\right)_p, \tag{6.3}$$

we obtain:

$$v = v_0 e^{\alpha(T-T_0)}, \tag{6.4}$$

i.e. the temperature dependence of the specific volume of a solid for which $\alpha =$ const is exponential.

The data given in Table 6.3 gives an idea of the actual dependence of the coefficient of volume expansion α on temperature.

As regards the heat capacity of solids, experimental studies show that at medium and high temperatures (above room temperature) the heat capa-

city of a solid is

$$c_v = 3R, \tag{6.5}$$

where R is the gas constant of the given substance. Accordingly, the molar heat capacity of a solid is

$$\mu c_v = 3\mu R. \tag{6.6}$$

Inasmuch as $\mu R = 8314$ J/(kmol-K) $= 1.986$ kcal/(kmol-K) (see page 23),

$$\mu c_v = 25.0 \text{ kJ/(kmol-K)} = 5.96 \text{ kcal/(kmol-K)}. \tag{6.7}$$

Unlike chemical compounds, chemical elements in a solid phase exist in an atomic state (even when in the gas phase the atoms of this element form a molecule, for instance, hydrogen, nitrogen, etc.). In calculating R, therefore, the quantity μR must be divided not by the molecular mass but by the atomic mass.

The relationship (6.7), first established experimentally and then determined by the methods of the molecular-kinetic theory of substance, is known as the *Dulong and Petit law.**

The Dulong and Petit law is an approximate law. For some light elements (for instance, diamond and boron) the magnitude of μc_v is considerably lower than 25.0 kJ/(kmol-K), amounting to about 7.3 kJ/(kmol-K) for diamond and 12 kJ/(kmol-K) for boron. In addition, the Dulong and Petit law fails to account for the dependence of the heat capacity of solids on temperature. At medium and high temperatures the heat capacity of the majority of solids is a slowly varying function of temperature.** However, this dependence should not be ignored in thermodynamic calculations. It follows from the foregoing that the Dulong and Petit law is only applicable to calculations where no high accuracy is essential.

At low temperature the Dulong and Petit law ceases to be valid even qualitatively, since the heat capacity of solids at low temperatures depends greatly on temperature. In principle, the dependence of heat capacity on temperature cannot be established with the aid of thermodynamic methods. The equation for the temperature dependence of the heat capacity of solids at low temperatures was derived by the Dutch physicist P. Debye (1912).

The *Debye equation* has the form

$$c_v = 3R\mathscr{F}\left(\frac{T}{\Theta}\right), \tag{6.8}$$

where $\mathscr{F}\left(\frac{T}{\Theta}\right)$ is a complex function of reduced temperature T/Θ, not depending on the individual properties of the substance and the same for all substances. In Eq. (6.8) the individual properties of a substance are reflected in the values of R and Θ, the latter being referred to as the *characteristic temperature*. The characteristic temperature is constant for a given substance. The values of Θ for some substances are given in Table 6.2.

---

* Named after the French physicists P. L. Dulong and A. T. Petit who established this law in 1819.

** Except for the above-mentioned solids, in which changes of phase take place, for instance, a change from one crystalline modification into another, from the ferromagnetic phase into the paramagnetic, from a superconductor into an ordinary conductor, etc. With an approach to the phase change points, heat capacity and the temperature coefficient of linear expansion increase abruptly.

Table 6.2 Characteristic temperature Θ for some substances

Substance	Θ (K)	Substance	Θ (K)
Aluminium	390	Lead	88
Copper	315	Nickel	370
Diamond	1860	Potassium	100
Germanium	290	Silver	215
Gold	170	Sodium	150
Iron	420	Tungsten	310

The Debye function $\mathscr{F}\left(\frac{T}{\Theta}\right)$ has the following form:

$$\mathscr{F}\left(\frac{T}{\Theta}\right) = 12\left(\frac{T}{\Theta}\right)^3 \int_0^{\Theta/T} \frac{x^3\,dx}{e^x - 1} - \frac{3\Theta/T}{e^{\Theta/T} - 1}, \tag{6.9}$$

where $x = h\nu/kT$, h is Planck's constant ($h = 6.625 \times 10^{-27}$ erg-s), k is Boltzmann's constant ($k = 1.38 \times 10^{-16}$erg-K^{-1}), and ν is the atomic oscillation frequency in the crystalline lattice. The characteristic temperature is expressed in the following form:

$$\Theta = \frac{h\nu_{max}}{k},$$

where ν_{max} is the maximum value of ν of a given substance.

For low temperatures ($T \ll \Theta$), Eq. (6.8) can be reduced to

$$c_v = \frac{12\pi^4}{5} R \left(\frac{T}{\Theta}\right)^3, \tag{6.10}$$

i.e.

$$c_v = 233R\left(\frac{T}{\Theta}\right)^3. \tag{6.10a}$$

In accordance with Eq. (6.10a), the heat capacity of a solid at low temperatures is proportional to temperature in the third power (this relationship is sometimes referred to as Debye's T^3 law).

At high temperatures ($T \gg \Theta$)

$$\lim_{(T/\Theta)\to\infty} \mathscr{F}\left(\frac{T}{\Theta}\right) = 1,$$

and Eq. (6.8) takes the form

$$c_v = 3R,$$

which coincides with the Dulong and Petit law [see Eq. (6.7)]. Thus, Eq. (6.7) can be considered the limiting case of the Debye equation (6.8).

Equation (6.8) is in good agreement with experimental data.

The dependence of the atomic heat capacity of solids on temperature, described by Eq. (6.8), is presented in Fig. 6.2, where the reduced temperature T/Θ is plotted on the abscissa, and the reduced heat capacity c_v/R on the ordinate. It can be seen from the graph that at high values of T/Θ the curve approaches asymptotically the value $c_v = 3R$, corresponding to the Dulong and Petit law.

It follows from Eq. (6.8) that the dependence $\mu c_v = f(T/\theta)$, plotted in Fig. 6.2, is valid for any solid. Knowing the constant θ and the atomic mass of a given substance, we can use the graph shown in Fig. 6.2 to determine readily the heat capacity of the solid at a temperature T.

It will be noted that Debye's equation is not universal. It is only applicable to solids with a comparatively simple crystalline structure (mainly to elements and to some simplest compounds). This equation fails to be true for solids with an intricate crystalline structure (anisotropic crystals, in particular). Nor does it express the nature of the temperature dependence of solids in which phase changes take place (near the phase change points). Finally, since at high temperatures Debye's equation reduces to the equation

Fig. 6.2

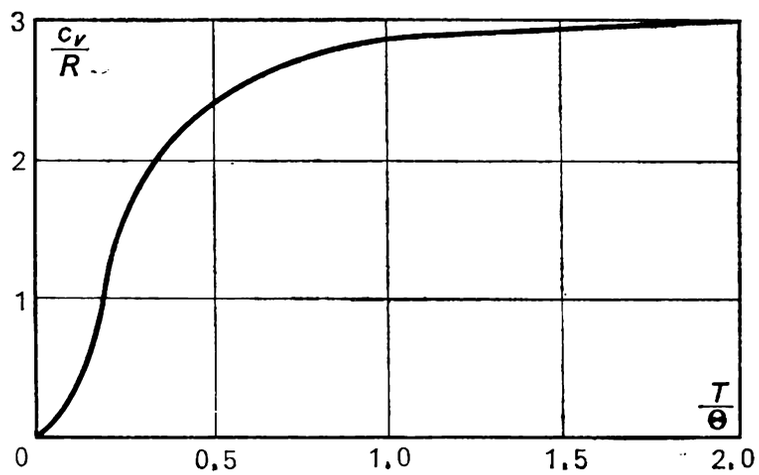

describing the Dulong and Petit law, it does not reflect the dependence of heat capacity on temperature at high temperatures.

As regards the heat capacity of a solid chemical compound, this can be evaluated with the aid of the *Kopp and Neumann law**, according to which the molar heat capacity of a solid chemical compound is equal to the sum of the atomic heat capacities of the elements whose atoms are components of the molecules of the particular compound (as to the atomic heat capacities of the elements, they can be determined from the Dulong and Petit law). It should be emphasized that the Kopp and Neumann law is an approximate law.

Up to now only the heat capacity c_v has been treated; as to the heat capacity c_p, the latter is related with c_v by Eq. (4.54):

$$c_p - c_v = -T\left(\frac{\partial p}{\partial v}\right)_T \left(\frac{\partial v}{\partial T}\right)_p^2,$$

or, which is the same,

$$c_p - c_v = \frac{\alpha^2 vT}{\beta} = \frac{9\alpha_l^2 vT}{\beta}. \tag{6.11}$$

For solids the difference $(c_p - c_v)$ is usually rather small, amounting to about 3 to 5 per cent of c_v. Therefore, whenever there is no very strict accuracy imposed on calculations, this difference can be ignored and c_p considered equal to c_v.

* Named after the German scientists H. Kopp and F. Neumann, who proposed this rule in 1864.

Table 6.3 Grüneisen's law

T (°C)	α_l (10^{-6} K^{-1})	c_p (kJ/kg-K)	c_p (kcal/kg-K)	α_l/c_p (10^{-6} kg/kJ)	α_l/c_p (10^{-6} kg/kcal)
			Aluminium		
−100	18.2	0.699	0.167	26.0	109
0	23.0	0.879	0.210	26.3	110
100	24.9	0.934	0.223	26.8	112
300	29.0	1.017	0.243	28.4	119
438	29.8	1.110	0.265	26.8	112
			Copper		
−87	14.1	0.339	0.081	41.6	174
0	16.1	0.381	0.091	42.3	177
100	16.9	0.394	0.094	43.0	180
400	19.3	0.452	0.108	42.8	179
600	20.9	0.481	0.115	43.5	182
			Iridium		
0	6.36	0.130	0.031	49.0	205
100	7.0	0.138	0.033	50.6	212
1200	9.50	0.193	0.046	49.4	207
			Iron		
−87	9.0	0.360	0.086	25.1	105
0	11.7	0.448	0.107	26.0	109
100	12.7	0.486	0.116	26.0	109
300	14.8	0.595	0.142	24.8	104
			Nickel		
−87	10.1	0.360	0.086	27.9	117
0	12.5	0.435	0.104	28.7	120
100	14.0	0.486	0.116	28.9	121
300	16.0	0.586	0.140	27.2	114
500	16.8	0.557	0.133	30.1	126
			Palladium		
−150	9.2	0.201	0.048	45.9	192
−100	10.1	0.222	0.053	45.6	191
0	11.5	0.243	0.058	47.3	198
100	12.2	0.260	0.062	47.0	197
875	15.5	0.318	0.076	48.7	204
			Platinum		
−150	7.4	0.1151	0.0275	64.3	269
−100	7.9	0.1235	0.0295	64.0	268
0	8.9	0.1331	0.0318	66.9	280
100	9.2	0.1390	0.0332	66.2	277
875	11.2	0.1758	0.0420	63.8	267

(Table 6.3 cont.)

T (°C)	α_l (10^{-6} K^{-1})	c_p (kJ/kg-K)	c_p (kcal/kg-K)	α_l/c_p (10^{-6} kg/kJ)	α_l/c_p (10^{-6} kg/kcal)
			Silver		
−87	17.1	0.218	0.052	78.6	329
0	18.3	0.234	0.056	78.1	327
100	19.2	0.243	0.058	79.1	331
500	23.1	0.276	0.066	83.6	350
800	26.0	0.318	0.076	81.7	342

In 1908 the German physicist E. Grüneisen related experimentally the heat capacity of metals c_p with their coefficient of volume expansion α. He found that for metals the ratio of the coefficient of volume expansion to heat capacity,

$$\frac{\alpha}{c_p} = \Xi, \tag{6.12}$$

is constant at any temperature and is individual for each substance.

This relationship, known as the *Grüneisen law*, is of an approximate nature. The data in Table 6.3* give an idea of the accuracy of this law.

The empirical Grüneisen law has been substantiated by the methods of statistical physics. It should be emphasized that this law has an absolutely clear thermodynamic meaning. Indeed, in accordance with Eq. (4.55), i.e.

$$c_p = T\left(\frac{\partial p}{\partial T}\right)_s \left(\frac{\partial v}{\partial T}\right)_p,$$

the heat capacity of a substance c_p and its thermal expansion $(\partial v/\partial T)_p$ are, obviously, related. This equation can be written in the following form:

$$\frac{\frac{1}{v}\left(\frac{\partial v}{\partial T}\right)_p}{c_p} = \frac{1}{vT\left(\frac{\partial p}{\partial T}\right)_s} \tag{6.13}$$

or, which is the same,

$$\frac{\alpha}{c_p} = \frac{1}{vT\left(\frac{\partial p}{\partial T}\right)_s}. \tag{6.13a}$$

This strictly thermodynamic relationship is, of course, valid for any substance in any state of aggregation.

The experimental data on the magnitudes of c_p and α for a number of metals (see Table 6.3, for instance) show that the ratio α/c_p is constant for these metals; in accordance with Eq. (6.13a), this means that for these metals the following relationship is true:

$$vT\left(\frac{\partial p}{\partial T}\right)_s = \text{const}, \tag{6.14}$$

* The data given in Table 6.3 pertain not to the coefficient of volume expansion α but to the coefficient of linear expansion α_l. The values of α_l can be easily converted into values of α with the aid of Eq. (6.2).

i.e.

$$\left(\frac{\partial T}{\partial p}\right)_s = \Xi v T, \tag{6.14a}$$

where Ξ is constant for the given substance [see Eq. (6.12)].

Equation (6.14a) shows that for metals for which Eq. (6.12) is valid the derivative $(\partial T/\partial p)_s$ is directly proportional to the specific volume and temperature. The derivative $(\partial T/\partial p)_s$ reveals the degree of increase in the substance's temperature upon adiabatic expansion.

Replacing in Eq. (6.14a) the specific volume v with the expression for the dependence of the specific volume of a metal on temperature [for instance, in the simplest case we can use Eq. (6.4)] we can obtain a single-valued dependence of the derivative $(\partial T/\partial p)_s$ on temperature.

For iron, whose specific volume $v = 1.27 \times 10^{-4}$ m³/kg at 0 °C and $\Xi = 26 \times \times 10^{-6}$ kg/kJ (109×10^{-6} kg/kcal), according to the data given in Table 6.3, Eq. (6.14a) gives:

$$\left(\frac{\partial T}{\partial p}\right)_s = 26 \times 10^{-9} \times 1.27 \times 10^{-4} \times 273.15 = 9.02 \times 10^{-10}\ \text{K/Pa}.$$

From the foregoing it follows that when iron is compressed instantaneously from atmospheric pressure to a pressure of 100 000 kPa (1020 kgf/cm²), the increase in temperature due to compression will amount to [assuming that $(\partial T/\partial p)_s$ is constant in this pressure interval]

$$\Delta T = \left(\frac{\partial T}{\partial p}\right)_s \Delta p = 9.02 \times 10^{-10} \times 10^8 \cong 0.09\ ^\circ\text{C}.$$

The Grüneisen law makes it possible to set up an interesting relationship between the heat capacities c_p and c_v of solids. Replacing in Eq. (6.11) the coefficient of volume expansion α (6.12), we obtain:

$$c_p - c_v = \frac{\Xi^2 v}{\beta} c_p^2 T. \tag{6.15}$$

We introduce the notation

$$Y = \frac{\Xi^2 v}{\beta}. \tag{6.16}$$

The quantity Y was shown by experiment to be related with the fusion (melting) point of a given substance, T_f, as follows:

$$Y = \frac{0.0214}{T_f}\ \text{kg/kcal} \quad \text{or} \quad Y = \frac{0.00511}{T_f}\ \text{kg/kJ}, \tag{6.17}$$

With account taken of Eq. (6.17), we obtain from Eq. (6.15) an empirical equation that relates the heat capacities c_p and c_v of a solid*:

$$c_p - c_v = 0.100 c_p^2 \frac{T}{T_f}, \tag{6.18}$$

where c_p and c_v are measured in kJ/(kg-K), or

$$c_p - c_v = 0.0214 c_p^2 \frac{T}{T_f}, \tag{6.18a}$$

where the heat capacities are measured in kcal/(kg-K).

Just as any empirical relationship, Eq. (6.18) is approximate and happens to be useful in evaluating the difference between c_p and c_v for a solid substance.

The difference $(c_p - c_v)$ can be calculated precisely only with the aid of the thermodynamic relationship (4.54), using the experimental data on α and β.

---

* Since the Grüneisen law, used in deriving Eq. (6.18), is only true for metals, the equation is, strictly speaking, applicable to metals only. Calculations have shown the equation to be also valid for some nonmetals, for instance, NaCl, KCl, and others.

The enthalpy of a solid at a temperature T can be determined either by experiment or by calculations based on the known value of the enthalpy at some temperature and on the data on the heat capacity c_p, with the aid of the relationship

$$i(T)=i(T_0)+\int_{T_0}^{T}\left(\frac{\partial i}{\partial T}\right)_p dT, \tag{6.19}$$

which, accounting for

$$\left(\frac{\partial i}{\partial T}\right)_p=c_p$$

[see Eq. (2.54)], reduces to

$$i(T)=i(T_0)+\int_{T_0}^{T} c_p\, dT, \tag{6.19a}$$

where $i(T_0)$ is the value of enthalpy at some temperature T_0. If $T_0 = 0$ K, the increase in the enthalpy of a solid that is heated from 0 K to a temperature T will be

$$i(T)=i(0\text{ K})+\int_{T_0}^{T} c_p\, dT. \tag{6.19b}$$

The value of i can be determined up to the value at 0 K, i.e. one can determine the difference between the enthalpies of a solid in the given state and at 0 K. In principle, i cannot be determined at 0 K, and, consequently, the formulation of the problem of determining the absolute value of i is meaningless.*

The magnitude of the heat capacity c_p of a solid, present in this equations, can be found either experimentally or calculated from the Debye equation (6.8).

The dependence of the enthalpy of a solid on pressure is so slight that the change in the enthalpy of a solid with a change in the pressure, acting upon the solid, can practically be ignored.

As was already mentioned in Sec. 5.5, a substance can exist in the solid phase in the form of various allotropic modifications, which differ from each other in their physical properties (crystalline structure, specific volume, heat capacity, etc.). Each of these different modifications exist only in a definite region of properties of state.** The transition from one region to another (i.e. from one modification to another) is in all respects similar to the ordinary change of phase: just as in the event of melting (fusion), evaporation, or sublimation, the specific volume and entropy change abruptly (consequently, the heat of phase transition exists as well), although the substance is in the solid state of aggregation in both phases. The slope of the boundary curve separating these modifications on the p-T diagram is determined from the ordinary Clausius-Clapeyron's equation (5.107):

$$\frac{dp}{dT}=\frac{L}{T(v_{\mathrm{I}}-v_{\mathrm{II}})},$$

where v_{I} and v_{II} are the specific volumes of the I and II modifications at the given point on the boundary curve, and L is the heat of phase transition.

---

* Although, in principle, one can speak of the difference between the enthalpies of *different* substances at 0 K. This is used, for instance, in the analysis of the thermal effects of chemical reactions proceeding at absolute zero.

** A given modification is thermodynamically unstable outside its region of states, and it turns into the modification which is stable in this region of states.

Fig. 6.3

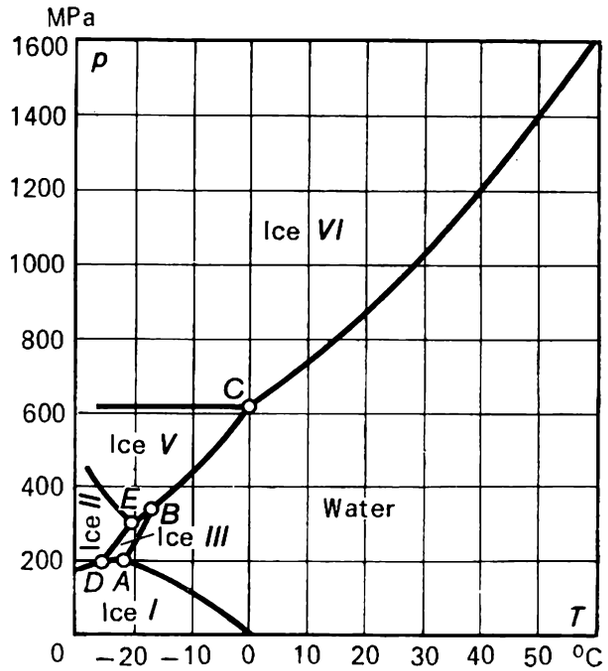

Fig. 6.4

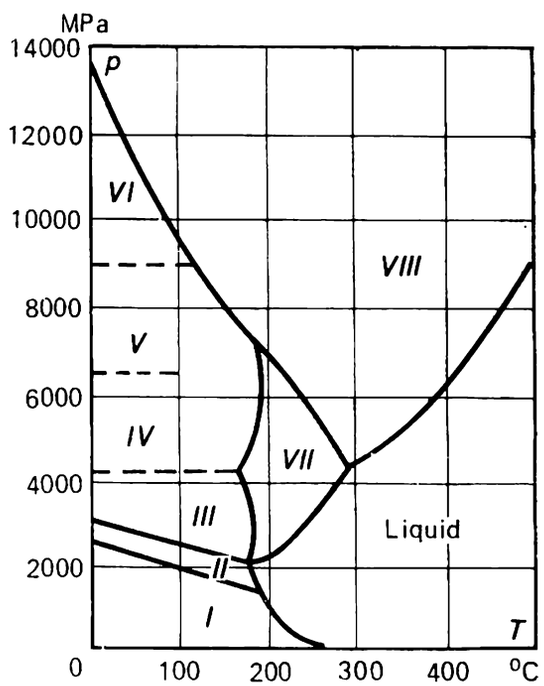

Figure 6.3 presents the p-T phase diagram for water. In the solid phase (ice), water has six different crystalline modifications, six types of ice.* In practice, only one of these modifications, ordinary ice (ice I), is encountered, since the other ice modifications exist at pressures above 200 MPa, as is clear from Fig. 6.3.

* Figure 6.3 does not give the region of ice VII, existing at pressures above 2000 MPa. As concerns ice IV, its region of states is not shown in Fig. 6.3 for another reason: after the existence of this ice modification was made commonly known, repeated measurements failed to corroborate the existence of ice IV. Thus, ice IV does not exist, and the numbering of the ice modifications (seven numbers) is a curious reflection of this error.

Some allotropic modifications of ice are characterized by phase change curves sloping in the direction opposite to the curve representing the modification *I*.

G. Tammann, who discovered the existence of modifications of ice other than ice *I*, carried out an interesting experiment. Having used an experimental device to obtain ice modification *II* at a pressure of about 200 MPa, he cooled it to the temperature of liquid air (—193 °C) and then quickly reduced the pressure to atmospheric and extracted the bar of ice *II* into the open air. As the temperature increased, the bar of ice began to swell, its volume increasing by about 20% (by virtue of the difference between the

Fig. 6.5

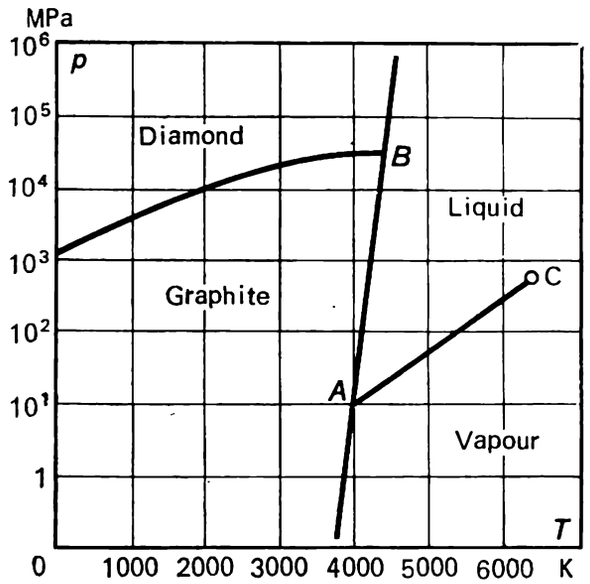

specific volumes of ice *I* and ice *II*), and the bar disintegrated, turning into a powder whose crystalline modification was similar to that of ice *I*.

The phase diagram for bismuth, shown in Fig. 6.4, is also of a rather intricate nature: in the solid state, bismuth has eight different modifications.

The *p-T* diagram for carbon is shown in Fig. 6.5. Solid carbon is known to have two crystalline modifications, graphite and diamond, differing drastically with respect to physical properties. It can be seen from Fig. 6.5 that under ordinary conditions (atmospheric pressure) graphite is a stable modification, while diamond is in a metastable state under standard atmospheric conditions and turns rather readily into graphite at high temperatures. At ordinary temperatures the change of diamond into graphite proceeds at a negligible rate, so that diamond preserves its crystalline structure practically indefinitely.

As can be seen from Fig. 6.5, diamond exists in a stable state at pressures above 10^9 Pa (or 10^4 kgf/cm^2). However, in order to produce diamond from graphite, it is insufficient to merely raise the pressure on graphite, since in the solid state the reversible process of graphite transition into diamond proceeds at a very slow rate. Therefore, the only practically feasible method of producing diamond from graphite consists in producing liquid carbon from graphite with subsequent cooling of the liquid carbon under a high pressure (exceeding the pressure on the graphite-diamond phase

change curve). The process is speeded up with the aid of special catalysts. At present the production of artificial diamonds is already put on an industrial basis.

Applying a similar method, it prooved possible in 1957 to develop artificially the body-centered cubic crystalline modification of boron nitride BN (the so-called borazon), a substance whose hardness exceeds that of diamond; borazon was produced at a pressure of about 10 000 MPa (100 000 kgf/cm²) and a temperature close to 2500 °C in the presence of a catalyst.

6.2 Thermal and caloric properties of liquids

The compressibility of liquids, just like of solids, in the common state* is rather slight, but their compressibility is nevertheless higher than that of the majority of solids. So, for instance, at a temperature of 20°C, the isothermal compressibility of water $\beta = -\frac{1}{v}\left(\frac{\partial v}{\partial p}\right)_T = 4.456 \times 10^{-10}\ \mathrm{Pa}^{-1}$. This means that with an increase in pressure, say, from 100 to 100 000 kPa (i.e. from about 1 to 1000 kgf/cm²) the decrease in the specific volume of water Δv will amount to 0.044 cm³/g. At $T = 20$ °C and atmospheric pressure, the specific volume of water $v = 1.0018$ cm³/g; hence, with an increase in pressure up to 100 000 kPa the specific volume diminishes by only 4.3%.

Due to the fact that for liquids (except for some anomalous cases considered below) the value of $(\partial v/\partial p)_T$ is usually small, the derivative $(\partial p/\partial T)_v$, characterizing the rate of change in pressure with temperature at a constant volume of liquid, is rather large. The derivative $(\partial p/\partial T)_v$ is related to the derivative $(\partial v/\partial p)_T$ by the equation

$$\left(\frac{\partial p}{\partial T}\right)_v = -\frac{\left(\frac{\partial v}{\partial T}\right)_v}{\left(\frac{\partial v}{\partial p}\right)_T}.$$

For water at a temperature $T = 50$ °C, for instance, $(\partial p/\partial T)_v = 1.006 \times 10^6$ Pa/K. This means that upon heating a hermetically closed, water-filled vessel of constant volume by $\Delta T = 10$ °C, the pressure of water in the vessel will increase by

$$\Delta p = \int_{50}^{60} \left(\frac{\partial p}{\partial T}\right)_v dT \cong \left(\frac{\partial p}{\partial T}\right)_v \Delta T = 1.006 \times 10^7 \mathrm{Pa} =$$

$$= 1.006 \times 10^4 \mathrm{kPa}\ (102.6\ \mathrm{kgf/cm^2}).$$

[For liquids the value $(\partial p/\partial T)_v$ does not usually have a strong dependence on temperature. Therefore, in doing approximate calculations, it is quite admissible to consider $(\partial p/\partial T)_v$ constant and take it out of the integral sign.] The reason for the so great increase in liquid pressure with a comparatively small rise in temperature is traced to the small compressibility of the liquid.

* That is, in a state far from the critical state (see Secs. 6.3 and 6.4).

Let us consider the so-called *internal pressure*. The idea of internal pressure is introduced in the following way. The work of expansion done by a system against the pressure exerted by external forces is determined from the relationship

$$dL = p\,dv.$$

On the other hand, it was established in Chapter 2 that the internal energy of a substance depends not only on temperature but also on specific volume:

$$u = f\,(T,\ v),$$

whence, in accordance with Eq. (2.29),

$$du = \left(\frac{\partial u}{\partial T}\right)_v dT + \left(\frac{\partial u}{\partial v}\right)_T dv.$$

It follows from the equation that in an isothermal process ($dT = 0$) the change in the internal energy is determined from the relationship

$$du = \left(\frac{\partial u}{\partial v}\right)_T dv. \tag{6.20}$$

The change in internal energy can be assumed due to the expenditure of work done on the forces of internal pressure:

$$du = p_{\text{in}}\,dv. \tag{6.21}$$

It follows from Eq. (6.21) that internal pressure can be determined as follows:

$$p_{\text{in}} = \left(\frac{\partial u}{\partial v}\right)_T. \tag{6.22}$$

With account taken of Eq. (4.25), we obtain:

$$p_{\text{in}} = T\left(\frac{\partial p}{\partial T}\right)_v - p. \tag{6.23}$$

The letter "p" present in Eq. (6.23) represents the external pressure acting on the substance. It follows from relationship (6.23) that

$$T\left(\frac{\partial p}{\partial T}\right)_v = p_{\text{in}} + p. \tag{6.23a}$$

The quantity $T\,(\partial p/\partial T)_v$, equal to the sum of the internal and external pressures, according to equation (6.23a) is sometimes referred to as the *total*, or *thermal pressure*. It should be emphasized that, unlike internal gas pressure, the internal pressure in liquids is enormous. For water, for instance, at $T = 50\,°\text{C}$ and an external pressure of 98 kPa (1 kgf/cm^2), in accordance with Eq. (6.23) the internal pressure is

$$p_{\text{in}} = (50 + 273.15) \times 1.066 \times 10^6 - 98 \times 10^3 = 325.0\ \text{MPa}\ (3318\ \text{kgf/cm}^2).$$

Liquids, as a rule, expand appreciably upon heating. So, for instance, the coefficient of volume expansion of nitrous acid $\alpha = \frac{1}{v}\left(\frac{\partial v}{\partial T}\right)_p$ is equal at room temperature to $124 \times 10^{-5}\ \text{K}^{-1}$; the coefficient of volume expansion of acetone is $\alpha = 143 \times 10^{-5}\ \text{K}^{-1}$, of benzol $\alpha = 110 \times 10^{-5}\ \text{K}^{-1}$; that of mercury, $18.1 \times 10^{-5}\ \text{K}^{-1}$.

The coefficients of volume expansion of some substances are characterized by a certain anomaly, the water anomaly, for instance. It is known that at the temperature of 3.98 °C and atmospheric pressure the density of water passes through a maximum*; the dependence of the specific volume of water on temperature at a pressure $p = 98$ kPa (1 kgf/cm²) is plotted in Fig. 6.6. As can be seen from the graph in Fig. 6.6, at temperatures $T < 3.98$ °C characteristic of water is $\left(\frac{\partial v}{\partial T}\right)_p < 0$, i.e. in the temperature interval from 0 to 3.98 °C heating of water results not in an increase but in a decrease in water volume. At the point of maximum density (at 3.98 °C), for water $(\partial v/\partial T)_p = 0$. Some other peculiarities, characteristic of the properties of water and traced to the density anomaly, will be treated below, in Sec. 7.1.

Fig. 6.6

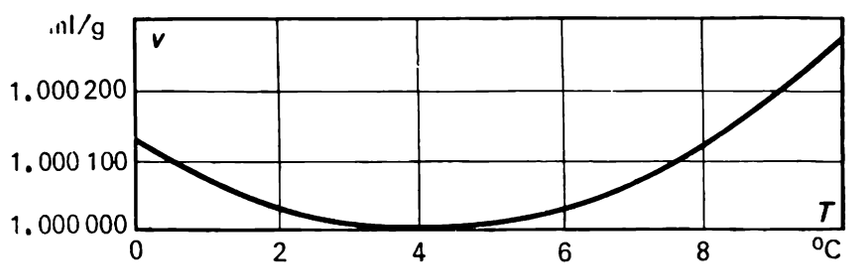

At temperatures above 3.98 °C the derivative $\left(\frac{\partial v}{\partial T}\right)_p$ for water is positive. For liquids the value of the derivative $(\partial v/\partial T)_p$ usually increases with temperature. In illustration, Table 6.4 contains data on the dependence of the derivative $(\partial p/\partial T)_p$ on temperature for water at atmospheric pressure.

Table 6.4 $\left(\frac{\partial v}{\partial T}\right)_p$ **versus** T **for water at atmospheric pressure**

T (°C)	$\left(\frac{\partial v}{\partial T}\right)_p$ (10^{-7} m³/kg-K)	T (°C)	$\left(\frac{\partial v}{\partial T}\right)_p$ (10^{-7} m³/kg-K)
1	−0.3088	60	5.284
10	0.9389	70	5.962
20	2.002	80	6.611
30	2.950	90	7.241
40	3.798	100	7.865
50	4.569		

As to the heat capacity of liquid, due to the fact that no satisfactory statistical theory of liquid has as yet been created, the heat capacities of

* It is precisely by virtue of this anomaly that bodies of water do not freeze bottom deep in bitter frosts: the warmer water, at 3.98 °C, is constantly at the bottom of the basin. But if the density of water were to diminish monotonically with dropping temperature, the intensive natural circulation of water would occur in the bodies of water, resulting in the bulk of water cooling off and freezing through in the long run.

liquids, c_p and c_v, cannot be evaluated theoretically (like, for instance, the calculation of the heat capacities of solids from Debye's equation) even approximately. The heat capacities of liquids are, therefore, determined by experiment or calculated with the aid of thermodynamic relationships based on the values of other thermal or caloric properties, such as enthalpy, p-, v-, T-dependencies, etc.

The heat capacity of liquids changes but slightly with pressure. The data given in Table 6.5 shows the dependence of the heat capacity of water,

Table 6.5 Heat capacity c_p of water versus pressure p at 20 °C

p (MPa)	c_p (kJ/kg-K)	c_p (kcal/kg-K)	p (MPa)	c_p (kJ/kg-K)	c_p (kcal/kg-K)
0.1	4.183	0.999	60	4.040	0.965
20	4.128	0.986	80	4.007	0.957
40	4.074	0.973	100	3.973	0.949

c_p, on pressure at a temperature of 20 °C. As can be deduced from the table, an increase in pressure from 0.1 to 100 MPa causes a change in heat capacity by only 5%.

In most engineering calculations the dependence of the heat capacity of liquid on temperature can be ignored, and this dependence ought to be taken into account only when calculation accuracy is essential. However, even then there is no need in determining by experiment the heat capacity at a high pressure p_2, since it can be calculated from the known heat capacity c_p at the pressure p_1 (usually atmospheric pressure) and the same temperature T by means of the relation

$$c_p(p_2, T) = c_p(p_1, T) + \int_{p_1}^{p_2} \left(\frac{\partial c_p}{\partial p}\right)_T dp. \tag{6.24}$$

Replacing the derivative $(\partial c_p/\partial p)_T$ by its value from Eq. (4.57), we obtain

$$c_p(p_2, T) = c_p(p_1, T) - T \int_{p_1}^{p_2} \left(\frac{\partial^2 v}{\partial T^2}\right)_p dp. \tag{6.25}$$

In the pressure interval from p_1 to p_2 the derivative $(\partial^2 v/\partial T^2)_p$ is calculated either directly from the experimental data on the dependence of the specific volume of liquid on temperature and pressure (it is much easier to measure experimentally the specific volume of liquids than to measure heat capacity) or from the equation of state for the liquid*. The integral present in the right-hand side of Eq. (6.25) is calculated from the known values of the derivative $(\partial^2 v/\partial T^2)_p$ by means of graphical or numerical methods. Although the finding of the second derivative numerically is not

* See Sec. 6.4.

very exact in itself, nevertheless, due to the slight change in the heat capacity c_p with pressure, it does not affect the accuracy of the calculated value of c_p at high pressure.

The heat capacity c_v at pressure p_2 and temperature T (denote the specific volume of the liquid in this state by v_2) can be determined from the known heat capacity at pressure p_1 and temperature T (in this state the specific

Fig. 6.7

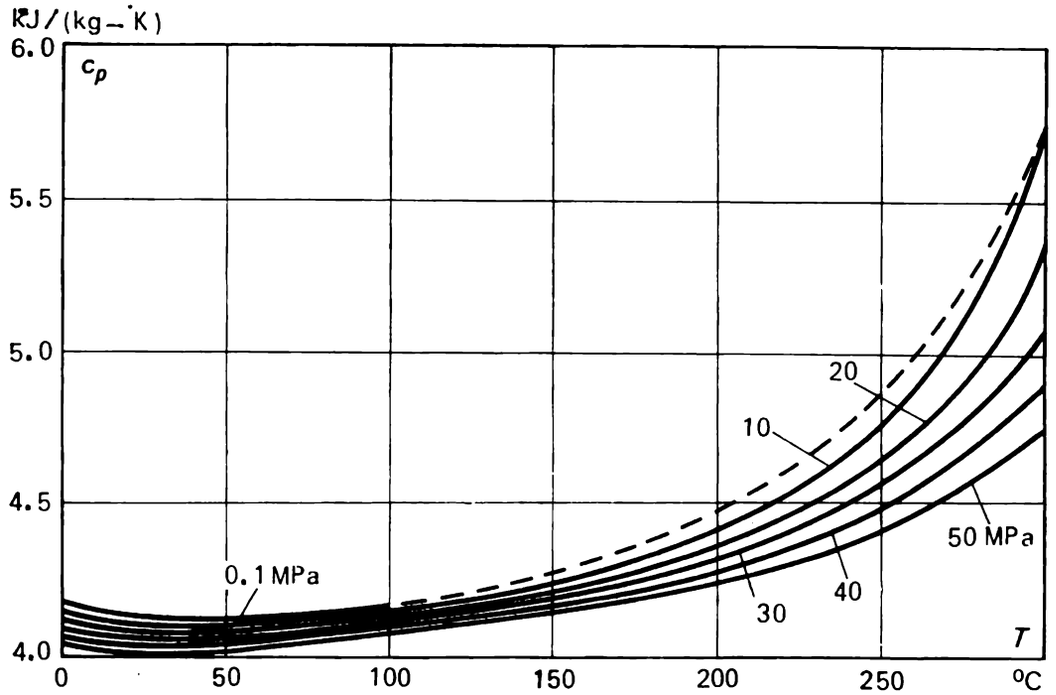

volume of the liquid is v_1) with the aid of the relationship

$$c_v(v_2, T) = c_v(v_1, T) + \int_{v_1}^{v_2} \left(\frac{\partial c_v}{\partial v}\right)_T dv, \tag{6.26}$$

where the derivative $(\partial c_v/\partial v)_T$ can be replaced with its value from Eq. (4.58):

$$c_v(v_2, T) = c_v(v_1, T) + T \int_{v_1}^{v_2} \left(\frac{\partial^2 p}{\partial T^2}\right)_v dv. \tag{6.27}$$

The derivative $(\partial^2 p/\partial T^2)_v$ is determined from the experimental data on the p- v- T-dependencies for the given substance or from the equation of state for the liquid.

Depending on the properties of state, the heat capacity c_p can either increase or decrease with temperature with the decrease being usually followed by the increase when the temperature monotonically increases. As an illustration, plotted in Fig. 6.7 is the dependence of the heat capacity of water, c_p, on temperature at different pressures. As can be seen from this graph, the heat capacity c_p of water has a minimum at about 20 °C. The graph also shows that, approaching the saturation line (the values of c_p at the points where the isobars intersect the saturation line are connected by the dotted line drawn through them), the heat capacity c_p increases appreciably.

For liquids the difference between the constant-pressure and constant-volume heat capacities, c_p and c_v, is usually small, which is clear from Table 6.6 that gives the heat capacities c_p and c_v of water at atmospheric

Table 6.6. Heat capacities of water at atmospheric pressure

T (°C)	c_p		c_v		$c_p - c_v$	
	(kJ/kg-K)	(kcal/kg-K)	(kJ/kg-K)	(kcal/kg-K)	(kJ/kg-K)	(kcal/kg-K)
0	4.220	1.008	4.220	1.008	~0	~0
10	4.191	1.001	4.187	1.000	0.004	0.001
20	4.183	0.999	4.153	0.992	0.030	0.007
30	4.178	0.998	4.120	0.984	0.058	0.014
40	4.178	0.998	4.078	0.974	0.100	0.024
50	4.183	0.999	4.032	0.963	0.151	0.036
60	4.183	0.999	3.982	0.951	0.201	0.048
70	4.191	1.001	3.931	0.939	0.260	0.062
80	4.195	1.002	3.877	0.926	0.318	0.076
90	4.204	1.004	3.823	0.913	0.381	0.091
100	4.216	1.007	3.768	0.900	0.448	0.107

pressure. Since it is by far more intricate to determine the heat capacity c_v by experimental studies than to determine the heat capacity c_v, and for liquids the difference $(c_p - c_v)$ is small, it is usually more expedient to calculate the heat capacity c_v of liquid from the values of the heat capacity c_p known, making use of Eqs. (4.52), (4.53), or (4.54). The values of the derivatives of thermal quantities present in these equations are calculated from the experimental data on the p-, v-, T-dependencies for liquid or from the equation of state.

It is of interest to point out that for the water-density anomaly point (3.98 °C), at which the derivative $(\partial v/\partial T)_p = 0$, it follows from Eq. (4.52) that $c_p = c_v$. The points of similar density anomalies represent one of two types of points possible on the thermodynamic surface of state of substance, at which the constant-pressure (isobaric) and constant-volume (isochoric) heat capacities are equal to each other (the second type are the triple points).

The enthalpy of a liquid can be determined either by experiment or by calculations based on the thermodynamic relationships if the data on heat capacity c_p are available.

At a pressure p and temperature T_2 the enthalpy can be calculated using the value of enthalpy known at the same pressure p, but at another temperature T_1, and a relationship similar to Eq. (6.19a) of the preceding section:

$$i(p, T_2) = i(p, T_1) + \int_{T_1}^{T_2} c_p \, dT; \tag{6.28}$$

the integral present in the right-hand side of Eq. (6.28) is calculated from the known experimental values of heat capacity c_p.

The change in the enthalpy of the liquid with rising pressure at a constant temperature T can be found with the aid of the relation

$$i(p_2, T) - i(p_1, T) = \int_{p_1}^{p_2} \left(\frac{\partial i}{\partial p}\right)_T dp, \tag{6.29}$$

whence, with account taken of (4.30),

$$\left(\frac{\partial i}{\partial p}\right)_T = v - T\left(\frac{\partial v}{\partial T}\right)_p,$$

we obtain:

$$i(p_2, T) - i(p_1, T) = \int_{p_1}^{p_2} \left[v - T\left(\frac{\partial v}{\partial T}\right)_p\right] dp. \tag{6.30}$$

To use this equation for calculations, data on the specific volumes of the liquid should be available.

It follows from Eqs. (6.29) and (6.30) that the values of enthalpy in two arbitrary states *1* (pressure p_1, temperature T_1) and *2* (pressure p_2 and temperature T_2) are related as follows:

$$i_2(p_2, T_2) - i_1(p_1, T_1) = \int_{p_1}^{p_2} \left[v - T\left(\frac{\partial v}{\partial T}\right)_p\right] dp + \int_{T_1}^{T_2} c_p\, dT. \tag{6.31}$$

As regards the calculation of the integrals present in the right-hand side of Eq. (6.31), the following should be pointed out. The change from state *1* into state *2* can take place, following an infinite number of paths, as shown in Fig. 6.8. Since enthalpy is a function of state, it follows that Eq. (6.31) can be used irrespective of the path, without impairing the result. It is, however, most convenient to select a combined isothermal-isobaric path, the calculation proving to be rather simple.The calculation can be carried out in two ways: (1) if the first integral is calculated along the isotherm $T_1 =$ $=$ const, then the second integral is calculated along the isobar $p_2 =$ const (line *1-a-2*); (2) if the first integral is calculated along the isotherm $T_2 =$ $=$ const, the second is calculated along the isobar $p_1 =$ const (line *1-b-2*).

The enthalpy of liquids is a slowly varying function of pressure; Table 6.7 illustrates this fact.

Table 6.7 Enthalpy of water at 100 °C

p (MPa)	i (kJ/kg)	(kcal/kg)	p (MPa)	i (kJ/kg)	(kcal/kg)
0.1	417.51	99.72	60	464.4	110.9
20	434.0	103.7	80	479.7	114.6
40	449.2	107.3	100	495.1	118.3

The following important fact should be noted. Any caloric quantity considered (heat capacity, enthalpy, internal energy, entropy) can always be separated into two terms: one depending only on temperature and the

other on pressure (or specific volume). These components of a caloric quantity are identified by different methods. The term depending only on temperature cannot be determined by means of thermodynamic methods; its value is either calculated using methods of statistical physics or is determined experimentally. The term depending on pressure, can be calculated through other thermodynamic properties with the aid of the differential equations of thermodynamics.

In Eq. (6.31) for the difference between the enthalpies in the two states *1* and *2*, the first term in the right-hand side of the equation is a fraction of this difference that depends only on pressure, and the second item a fraction that depends only on temperature.

Fig. 6.8

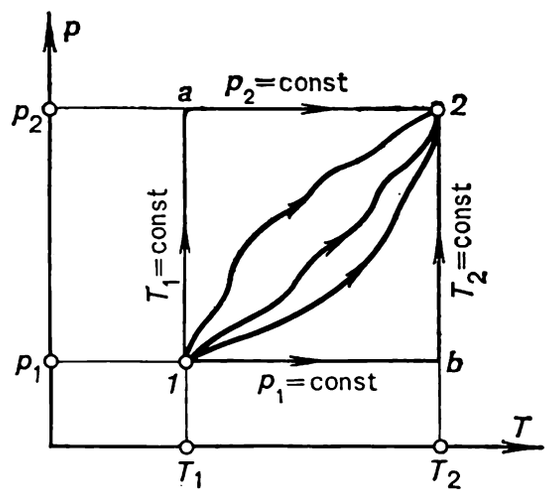

Treated in the preceding section was the problem concerning the absolute value of enthalpy. It will again be emphasized that the absolute value of enthalpy (just like the absolute value of internal energy) can be neither measured nor calculated by means of thermodynamic methods; experimental studies and thermodynamic calculations permit us to determine only the change in the enthalpy or in the internal energy of substance. It is precisely this difference that is of interest in engineering. In calculating the change in enthalpy the selection of the reference point of the substance's enthalpy is immaterial.

For various substances the enthalpy (or internal energy) reference point is selected arbitrarily. So, for instance, as was already mentioned in Chapter 2, for water and water vapour (steam), in accordance with decision of the 6th International Steam Table Conference (1963), the zero value is the value of the internal energy of water at the triple point ($T = 273.16$ K, $p = 610.8$ Pa $= 0.006\,228$ kgf/cm^2). It is clear that at this point the value of the enthalpy of water differs from zero; from the relation

$$i = u + pv$$

it follows that at $u = 0$

$$i = pv.$$

Since the volume of water at the triple point $v = 1.0002$ cm^3/g,

$$i = 610.8 \times 1.0002 \times 10^{-3} = 0.611 \text{ J/kg } (0.000146 \text{ kcal/kg}).$$

For carbon dioxide, for instance, zero is usually assigned to the point at which the value of enthalpy at 0 °C and a pressure of 98 kPa (1 kgf/cm²).

Speaking about the thermodynamic properties of liquids, we must mention a liquid that possesses a unique physical properties, liquid helium. Of all the gases known, helium liquefies at the lowest temperature; its boiling point at atmospheric pressure is 4.2 K. At low pressures (up to 2500 kPa) helium remains in the liquid state up to 0 K; solid helium can exist only at higher pressures (see the phase diagram for helium presented in Fig. 6.9). When cooled at atmospheric pressure (or close to it) to a temperature below 2.17K (with a rise in pressure this temperature drops somewhat), liquid helium passes into a new modification that possesses a number of striking properties, of which the main one is superfluidity. This modification of helium is referred to as helium II (as distinguished from ordinary liquid helium, known as helium I). The point at which helium I changes

Fig. 6.9

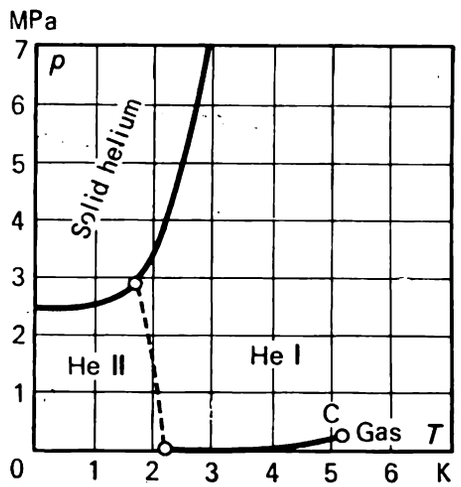

into helium II is referred to as the λ-point; the line connecting the λ-points at different pressures is called the λ-line. One of the most amazing properties of helium is that, as can be seen from Fig. 6.9, the lines of liquid-vapour and solid-liquid phase change of helium do not intersect; consequently, helium has no triple point.

6.3 Andrews' experiment. The critical point. Van der Waals' equation

It has long been known that a number of substances, existing in a gaseous state at room temperature, can be liquefied readily by increasing the pressure, i.e. by compressing the gas at a constant temperature. The physical features of this isothermal process (T = const) are clear: first the gas is compressed; after the gas pressure rises to p_s (the saturation pressure of this gas at the given temperature T), condensation of the gas initiates. Upon termination of condensation (i.e. after the entire gas turns into a liquid) further compression will result in an increase in liquid pressure, with a considerable increase in pressure resulting in a rather small decrease in the specific volume of the liquid, due to its small compressibility.

Making use of this method, it is possible, for instance, to liquefy carbon dioxide at room temperature. In Fig. 6.10 the specific volume v of carbon dioxide is plotted against pressure p at a temperature of 20 °C.* At a tem-

* Since, when undergoing compression from atmospheric pressure to 10 000 kPa at 20 °C the specific volume of carbon dioxide changes by a factor of 470, to reduce the size of the graph in Fig. 6.10 the v-axis is ruled logarithmically.

perature of 20 °C and a pressure of 98 kPa (1 kgf/cm²) the specific volume of carbon dioxide is 561.8 cm³/g (point *1* in Fig. 6.10). In the course of compression the specific volume diminishes strongly. After the pressure is increased to 5733 kPa (58.46 kgf/cm²), i.e. raised to the saturation pressure of carbon dioxide at 20 °C (point *2* in Fig. 6.10), condensation of the carbon dioxide initiates, with the specific volume of carbon dioxide being equal to $v'' = 5.258$ cm³/g. As is known (see Sec. 5.5), this isothermal process is simultaneously an isobaric (constant-pressure) one. Therefore, the section of the isotherm corresponding to the change of phase runs horizontally on the *p-v* diagram. Upon termination of the process of condensation the specific

Fig. 6.10

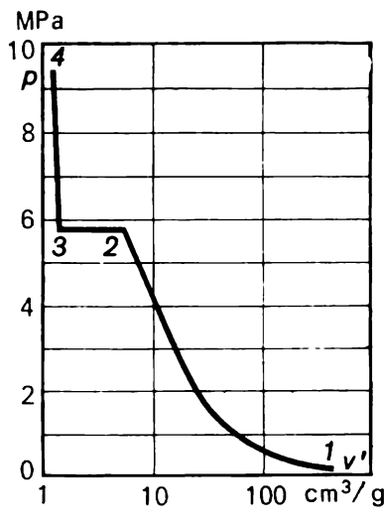

Fig. 6.11

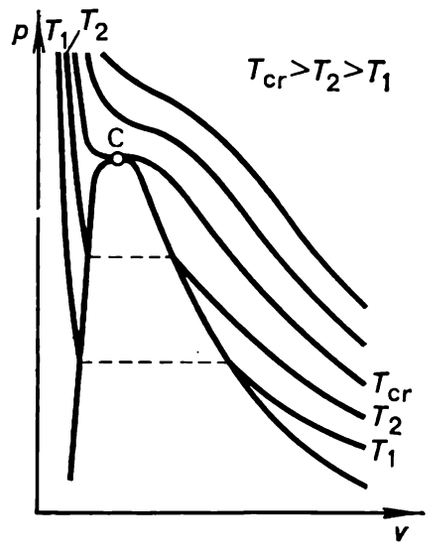

volume of the saturated liquid (point *3* in Fig. 6.10) v' will be equal to 1.258 cm³/g. With further compression of the liquid phase its specific volume will change rather slightly, as was already mentioned above; at a pressure of 9807 kPa (100 kgf/cm²), for instance, the specific volume of liquid carbon dioxide v will amount to 1.18 cm³/g (point *4* in Fig. 6.10).

If the pressure acting upon the liquid is diminished, the substance will pass through the same states but in a reverse order: it will expand to the boiling point, then evaporation will take place, and then the formed vapour will expand to atmospheric pressure.

It is clear from this that the carbon dioxide, delivered to consumers in gas cylinder, is in a liquid state (the pressure of the gas is about 6000 kPa).

At the same time, it has been long known that it is impossible to liquefy a great number of gases by mere compression at room temperature; with increasing pressure the specific volumes of these gases diminish monotonically failing to produce the characteristic horizontal section on the *p-v* diagram (line *2-3* in Fig. 6.10). The reason for this phenomenon remained unclear for a time.

In this connection it will be pointed out that up till 1869 liquids and their vapours were considered to be different phases as, for instance, a solid and a liquid. This point of view was modified essentially following the known experiments conducted by the Irish chemist T. Andrews in 1857-1869.

Conducting experiments devoted to the study of the *p*-, *v*-, *T*-dependencies for carbon dioxide and measuring the dependence of v on p on different

isotherms, Andrews found that the higher the temperature at which the dependence of v on p is measured, the smaller the difference between the specific volumes of the gas and liquid phases: with increasing temperature the magnitude of the specific volume of dry saturated vapour, v'', diminishes rapidly, and the value of the specific volume of the saturated liquid, i.e. of the liquid at the boiling point, v', increases. Hence, the higher the temperature on the isotherm, the smaller the difference $(v'' - v')$; in other words, the difference between the densities of the liquid and gas phases decreases with rising temperature.

The nature of the dependence of v on p for different isotherms is illustrated schematically in Fig. 6.11. On the graph the points at which the change of phase initiates and ends are connected by dotted lines (i.e. the values of v' and v'' on different isotherms, the so-called *boundary curve*). As it can be seen from the illustration, the length of the horizontal section of the isotherm between points v' and v'' diminishes with rising temperature (and, consequently, with an increase in saturation pressure*).

Further investigations have shown that an increase in saturation temperature (or pressure) results in a decrease in the latent heat of vapourization r.

The difference between the specific volumes $(v'' - v')$ continues to decrease with rising temperature until this difference turns into zero at some temperature (denote it by T_{cr}). Consequently, in this state the difference between the liquid phase and the gas phase will vanish, i.e. with rising pressure the specific volume of substance will change monotonically on the isotherm T_{cr} = const and on isotherms corresponding to higher temperatures, without the abrupt change in volume from v'' to v' which is characteristic of a change in phase.

The point on the saturation line at which the difference between the liquid phase and the gas phase vanishes is called the *critical point*. The pressure and temperature of a substance at the critical point are referred to as the *critical pressure* (p_{cr}) and *critical temperature* (T_{cr}). The state of a substance at $p = p_{cr}$ and $T = T_{cr}$ is called the *critical state*.

The critical point is the end point of the liquid-vapour phase change line, initiating at the triple point. The critical pressure and temperature are the maximum ones for the lipuid-vapour phase region.

In accordance with the foregoing, at the critical point

$$v'' - v' = 0 \tag{6.32}$$

and, consequently,

$$v'' = v' = v_{cr}. \tag{6.33}$$

The latent heat of vapourization r was shown by experiment to turn into zero at the critical point, which is clear from the Clausius-Clapeyron equation (5.107); writing this equation in the form

$$r = T(v'' - v')\frac{dp}{dT}$$

and, bearing in mind that the derivative dp/dT cannot be infinitely large, we arrive at the conclusion that at the critical point $r = 0$.

* Since, as it was shown in Sec. 5.6, for any substance dp/dT is always greater than zero at the liquid-vapour phase change line (boundary).

As can be seen from Fig. 6.11, at the critical point the isotherm $T_{cr} =$ $=$ const has a horizontal tangent and an inflexion, i.e. at the critical point

$$\left(\frac{\partial p}{\partial v}\right)_T^{cr} = 0, \tag{6.34}$$

$$\left(\frac{\partial^2 p}{\partial v^2}\right)_T^{cr} = 0. \tag{6.35}$$

A number of specific thermodynamic peculiarities, inherent to the critical point, will be considered in detail in Sec. 6.6. The critical properties of various substances are not the same; for some substances the critical properties are given in Table 6.8.

Table 6.8 Critical properties of some substances

Substance	T_{cr} (°C)	p_{cr} (MPa)	Substance	T_{cr} (°C)	p_{cr} (MPa)
Helium	−267.9	0.228	Ammonia	132.3	11.28
Hydrogen	−239.9	1.29	Ethyl alcohol	243.1	6.38
Nitrogen	−147.0	3.39	Water	374.15	22.129
Carbon dioxide	31.04	7.412	Mercury	1490	151
Oxygen	118.4	5.07	Carbon	~6000	~690

On the p-v diagram isotherms with $T > T_{cr}$ (supercritical isotherms) have no horizontal tangent, the derivative $(\partial p/\partial v)_T < 0$ on all these isotherms; the characteristic feature of all the isotherms close to the critical one consists in the presence of an inflexion which vanishes gradually with transition to high-temperature isotherms.

It follows from the foregoing that at supercritical temperatures no gas can be liquefied by means of an isothermal compression.

Thus, the experiments of Andrews established the continuity of the gas and liquid phases of substance.

Figure 6.12 shows the v-T diagram for the liquid and gas states of a substance, in which the isobars and the gas-liquid boundary curve are plotted. Consider the subcritical (*aa*) and supercritical (*bb*) isobars. When the temperature of liquid is increased on the subcritical isobar (i.e. at a constant pressure $p < p_{cr}$), the specific volume of the liquid increases (line *a-1*) by virtue of thermal expansion. Then, after the liquid is heated to the boiling point at this pressure, vapourization of the liquid initiates. The isobaric-isothermal process of vapourization is represented on this diagram by the vertical line *1-2* confined between two boundary curves. A further addition of heat causes superheating of the vapour formed, and its specific volume increases (line *2-a*). The vapour in equilibrium with the liquid is called *saturated vapour*, while the vapour at a temperature higher than the boiling point at the given pressure is called *superheated vapour*.

With temperature rising on the supercritical isobar (*bb*) the specific volume of substance changes continuously, without the abrupt change in volume typical of phase transition.

Figure 6.13 shows the region of the gaseous and liquid states of substance represented in the p-T diagram, on which the isochors and the liquid-vapour

phase change line (saturation line) are plotted. The liquid phase is arranged to the left of the saturation line (isochors $v < v_{cr}$), and the gas phase lies to the right of the saturation line (isochors $v > v_{cr}$). The isochor corresponding

Fig. 6.12

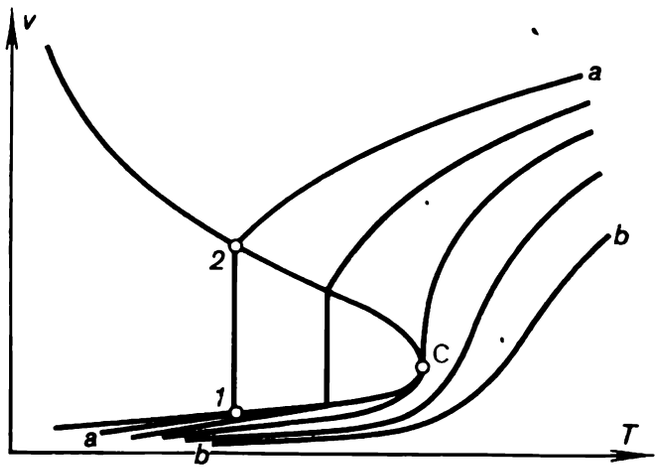

Fig. 6.13

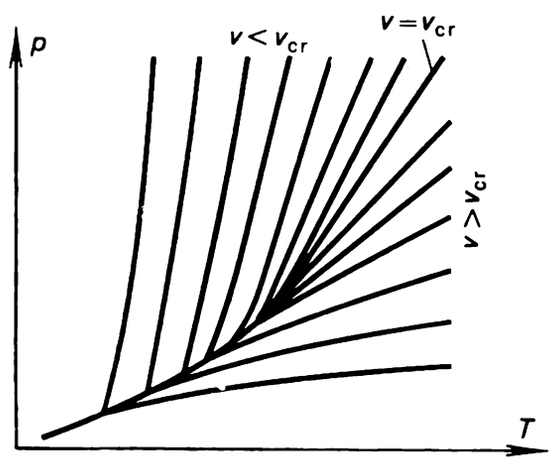

to the specific volume $v = v_{cr}$ is called the critical isochor; it has a common tangent with the saturation line at the critical point.

In Sec. 1.3 we were considered the p-v, v-T and p-T diagrams for an ideal gas, satisfying the Clapeyron equation. As can be seen from Figs. 6.11 to 6.13, the diagrams of state for a real substance in the gas and liquid phases differ greatly from the diagrams of state plotted for an ideal gas. This is traced to the different physical natures of real and ideal gases; on page 21 an ideal gas was defined as one in which there are no forces of molecular interaction and the molecules of the gas have no volume of their own, while the molecules of a real gas possess a certain volume and interact with each other, resulting in that the equation of state for an ideal gas differs from the Clapeyron equation (1.23).

The problem concerning the equation of state for a real gas is of great interest. One of the first attempts made in this field is the derivation of the equation of state for a real gas, undertaken by the Dutch physicist J.D. Van der Waals (1873). The *Van der Waals equation* derived essentially on

the basis of speculative conclusions has the following appearance:

$$\left(p+\frac{a}{v^2}\right)(v-b)=RT, \tag{6.36}$$

where a and b are constants, which together with the gas constant R characterize the individual properties of substance. The Van der Waals equation differs from the Clapeyron equation in that the quantity p is replaced by the sum of p and some quantity a/v^2, and that the specific volume is replaced by the difference $(v-b)$.

In accordance with the Clapeyron equation, at $p \to \infty$ and constant temperature the specific volume of an ideal gas tends to zero. From Van der Waals' equation it follows that for $p \to \infty$ we have $v \to b$. The quantity b, consequently, can be interpreted as the volume occupied by the molecules. The quantity b is considered to be constant and independent of external pressure, and the changing fraction of the specific volume is equal to $(v-b)$.

As to the quantity a/v^2, on the basis of simple qualitative molecular-kinetic reasonings, Van der Waals showed that the intermolecular forces are inversely proportional to the magnitude of the specific volume v. Hence, the term a/v^2 accounts for the interaction of gas molecules. As is known from elementary physics, the intermolecular forces are responsible for the appearance of internal pressure in gases and liquids. Consequently, the quantity a/v^2 can be regarded as the internal pressure of a gas,

$$p_{\text{in}}=\frac{a}{v^2}, \tag{6.37}$$

traced to the forces of molecular interaction.

The validity of this conclusion can be verified in the following manner. From the Van der Waals equation, presented in the form

$$p=\frac{RT}{v-b}-\frac{a}{v^2}, \tag{6.36a}$$

we obtain:

$$\left(\frac{\partial p}{\partial T}\right)_v=\frac{R}{v-b}. \tag{6.38}$$

Substituting the value of the derivative $(\partial p/\partial T)_v$ into Eq. (6.23), we get:

$$p_{\text{in}}=\frac{RT}{v-b}-p, \tag{6.39}$$

whence, with account taken of Eq. (6.36a), we obtain Eq. (6.37).

In accordance with what was said in Sec. 6.2, the sum of the external (p) and internal (a/v^2) pressures represents the total pressure.

Thus, Van der Waals' equation accounts for the real properties of a gas, the presence of the interaction between molecules in the gases and the volume of molecules. When plotted on a p-v diagram, the isotherms of the Van der Waals gas have the appearance shown in Fig. 6.14.

The Van der Waals equation is a cubic equation in v and, consequently, it has three roots, with the following cases being possible:

(a) one root is real and two imaginary;
(b) all the three roots are real and differ from one another;
(c) all the three roots are real and equal to each other.

The case of the three real roots equal to each other at a given pressure p corresponds to the critical pressure. The case of one real and two imaginary roots corresponds to supercritical pressures, since for given p and T only one value of v is possible, and the imaginary roots have no physical meaning. The three real and different roots (6.14) correspond to subcritical pressures.

The supercritical isotherms of the Van der Waals gas correspond qualitatively to the isotherms of a real gas (see Fig. 6.11). On the subcritical isotherms the horizontal section, corresponding to the liquid-vapour phase

Fig. 6.14

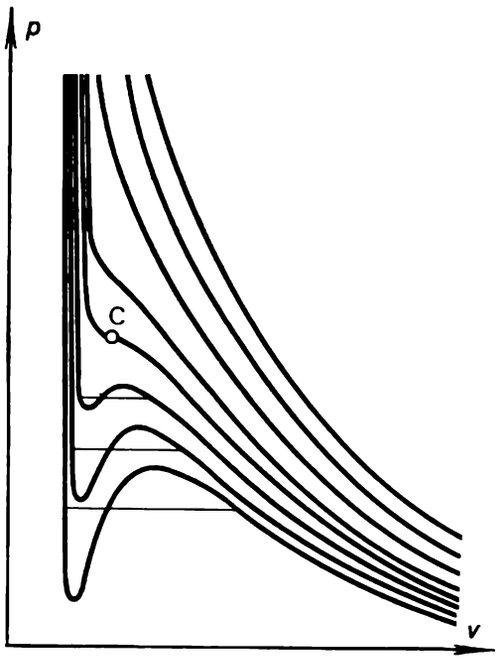

Fig. 6.15

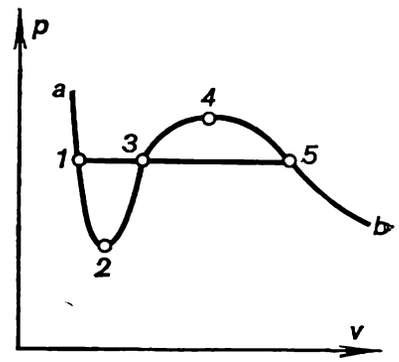

change, is replaced by a sigmoid section (Fig. 6.15), which can be considered as follows. The section *1-2* corresponds to the metastable state of the liquid (superheated liquid), and section *5-4*, to the metastable state of the vapour phase (subcooled vapour). Horizontal line *1-3-5* is the locus of all boiling saturated-liquid states (*1*) and dry saturated-vapour states (5) on the given isotherm. Consequently, *1-3-5* is the section of the isotherm corresponding to the liquid-vapour phase change; in contrast to the sections *1-2* and *5-4* this straight line corresponds to stable states of substance. As to the section *2-3-4* of the sigmoid curve, it corresponds to states which cannot be realized, and it has no physical meaning since on this section

$$\left(\frac{\partial p}{\partial v}\right)_T > 0.$$

How was the position of the horizontal line *1-3-5* on the isotherm *a-1-2-3-4-5-b* for the Van der Waals gas chosen? Why is this straight line drawn just as shown in Fig. 6.15 and not higher or lower?

The position of this straight line can be determined with the aid of the so-called *Maxwell's construction*, the essence of which is as follows. We assume that the considered isotherm can be realized and represented both by line *a-1-2-3-4-5-b* and by line *a-1-3-5-b*, the given substance can be visualized undergoing a reversible cycle in the course of which the state of the substance

changes along the closed path *1-2-3-4-5-3-1*. For any reversible cycle,

$$\oint \frac{dq}{T} = 0.$$

Since the substance's temperature remains constant along the entire path (for this path is made up of the sections of two possible alternatives of one and the same isotherm), the latter equation can be presented as

$$\oint dq = 0. \tag{6.40}$$

Substituting into equation (6.40) the value of dq from the equation of the first law of thermodynamics (2.23)

$$dq = du + p\,dv$$

and taking into account that since the internal energy u is a function of state

$$\oint du = 0, \tag{6.41}$$

we obtain for the cycle considered

$$\oint p\,dv = 0. \tag{6.42}$$

As can be seen from Fig. 6.15, this relationship indicates that the position of the straight line 1-3-5 in respect to the Van der Waals isotherm must be chosen in such a way that area 1-2-3-1 is equal to area 3-4-5-3 since in the event of contour integration these areas will have opposite signs, to meet the condition (6.42) we must require the equality of these areas.

The constants a and b of the Van der Waals equation are calculated by means of Eqs. (6.34) and (6.35), which are true for the critical point. Having calculated the derivatives $(\partial p/\partial v)_T$ and $(\partial^2 p/\partial v^2)_T$ from the Van der Waals equation and equating these derivatives to zero, we obtain:

$$a = \frac{27}{64}\frac{R^2T_{cr}^2}{p_{cr}} \tag{6.43}$$

and

$$b = \frac{v_{cr}}{3}. \tag{6.44}$$

The critical pressure, temperature and specific volume can be expressed in terms of a and b as follows:

$$p_{cr} = \frac{1}{27}\frac{a}{b^2}; \tag{6.45}$$

$$T_{cr} = \frac{8a}{27bR}; \tag{6.46}$$

$$v_{cr} = 3b. \tag{6.47}$$

Denote the ratios of the pressure, temperature and specific volume, which satisfies the Van der Waals equation, to the values of these quantities at the crytical point

$$\pi = \frac{p}{p_{cr}}, \quad \tau = \frac{T}{T_{cr}}, \quad \omega = \frac{v}{v_{cr}}. \tag{6.48}$$

The dimensionless quantities π, τ and ω are called the *reduced pressure*, *temperature* and *specific volume*. Substituting p, T and v, expressed in terms of the reduced values, into Van der Waals' equation (6.36) and taking into account Eqs. (6.45) to (6.47), we obtain:

$$\left(\pi+\frac{3}{\omega^2}\right)(3\omega-1)=8\tau, \tag{6.49}$$

i.e. the Van der Waals equation in the dimensionless, or reduced, form. Equation (6.49) has the following distinguishing feature: it contains no constant related to the individual properties of substance [like a, b and R in Eq. (6.36)]. Consequently, the dimensionless Van der Waals equation (6.49) is valid for any Van der Waals gases. This interesting conclusion will be used in the following section to substantiate the method of thermodynamic similarity of substance.

Statistical physics makes it possible to prove that a relationship similar to the Van der Waals equation can be obtained if we confine ourselves to the consideration of only two-particle molecular interactions (and neglect the three-particle, four-particle, etc. molecular interactions), which are considered to be sufficiently small. It is clear that the equation derived from these initial conditions will not allow for the presence of molecular associations, since associations may form from the interaction between not less than three molecules*. This equation, consequently, is only applicable to the region of small gas densities (i.e. in the region of low pressures and high temperatures), where the number of associations is rather small. Thus, a Van der Waals gas, similar to an ideal gas, can be considered to be a second approximation of a real gas**.

In this connection the following is of interest. From the previously derived equation for a Van der Waals gas,

$$\left(\frac{\partial p}{\partial T}\right)_v=\frac{R}{(v-b)},$$

it follows that

$$\left(\frac{\partial^2 p}{\partial T^2}\right)_v=0. \tag{6.50}$$

With allowance for Eq. (4.58) it follows from Eq. (6.50) that

$$\left(\frac{\partial c_v}{\partial v}\right)_T=0,$$

i.e. the heat capacity c_v of a Van der Waals gas, just as the heat capacity of an ideal gas, does not change with changing specific volume and, consequently, depends only on temperature. As to the internal energy of a Van der Waals gas, substituting the value of $(\partial p/\partial T)_v$ from relationship (6.38)

---

* Two-particle molecular interaction results only in an exchange of energy between the colliding molecules. For a simplest association, consisting of two molecules, to form there should be a simultaneous collision between at least three molecules, resulting in two molecules forming an association (i.e. the relative velocity of the molecules in respect to each other will become equal to zero and they will move as a whole), and the excess energy will be carried away by the third molecule.

** The constants (functions) a and b are then calculated from experimental data based on the p-, v-, T-dependency for the gas in this region of states; their values have nothing in common with the values determined from relationships (6.43) and (6.44).

into Eq. (4.25), we get:

$$\left(\frac{\partial u}{\partial v}\right)_T = \frac{a}{v^2}, \tag{6.51}$$

i.e. the internal energy of a Van der Waals gas depends on volume*, whereas the internal energy of an ideal gas depends only on temperature. As regards real gases, as was mentioned in Chapter 2, both the internal energy and the heat capacity c_v of real gases depend on specific volume. This simple analysis substantiates the conclusion that a Van der Waals gas occupies an intermediate position between an ideal and a real gases.

As to the somewhat strange, at first sight, conclusion that the internal energy of a Van der Waals gas depends on volume and the heat capacity c_v of this gas does not, this can be elucidated as follows. As can be seen from Eq. (6.50), on the p-T diagram the isochors of a Van der Waals gas are straight lines, just as the isochors of an ideal gas. However, in contrast to the isochors of an ideal gas, for which the derivative $(\partial p/\partial T)_v = p/T$, for the isochors of a Van der Waals gas this derivative is $R/(v - b)$, as can be seen from Eq. (6.38). It follows from this that, according to Eq. (4.25), for a Van der Waals gas the derivative $(\partial u/\partial v)_T$ is not equal to zero.

Table 6.9 Critical coefficients of substances

Substance	z_{cr}	Substance	z_{cr}
Acetic acid	0.200	Nitrogen	0.293
Argon	0.292	Oxygen	0.293
Carbon dioxide	0.288	Petrol (gasoline)	0.267
Helium	0.320	Water	0.224
Hydrogen	0.330	Xenon	0.278
Methyl alcohol	0.219		

It follows from the foregoing reasonings that the Van der Waals equation cannot, in principle, be applied to regions where the substance possesses strongly pronounced properties of a real gas (the region adjoining the saturation line, the near-critical region) and, all the more so, to the liquid region. In fact, as shown by calculations, attempts to use the Van der Waals equation to describe the state of substance in the regions indicated lead to great deviations from the real values of the thermodynamic properties of a substance. The magnitude of these deviations can be estimated by considering the following example. Let us introduce the concept of the so-called *critical coefficient*

$$z_{cr} = \frac{p_{cr} v_{cr}}{R T_{cr}}. \tag{6.52}$$

With account taken of relationships (6.45) through (6.47), we find from Eq. (6.52) that for substances satisfying the Van der Waals equation, the

* The enthalpy and heat capacity c_p of a Van der Waals gas can be shown, by analogous methods, also to change with pressure.

critical coefficient is

$$z_{cr} = \frac{3}{8} = 0.375.$$

The values of the critical coefficient for different substances are given in Table 6.9, from which it can be seen that the critical coefficients of real substances differ considerably from the Van der Waals magnitude of $z_{cr} = 0.375$.

6.4 Thermal and caloric properties of real gases. Equation of state for real gases

The regularities governing the change of the thermal properties of real gases were considered in the main in the preceding section. In particular, these regularities are obvious from the p-v, v-T and p-T diagrams shown in Figs. 6.11 to 6.13. As can be seen from Fig. 6.11, in the gas phase the subcritical isotherms are considerably flatter than in the liquid phase, which is not surprising since the isothermal compressibility of gas $(\partial v/\partial p)_T$ is considerably greater (in its absolute value) than that of liquid. The supercritical isotherms are of a similar nature: the isotherms are much steeper in the region of specific volumes $v < v_{cr}$ than in the region of specific volumes $v > v_{cr}$ for the same reasons.

On the v-T diagram (Fig. 6.12), in the gas region, the subcritical isobars run much steeper than in the liquid region by virtue of the fact that the degree of thermal expansion of gas $(\partial v/\partial T)_p$ is considerably greater than that of liquid. The lower the pressure, the greater (at the same temperature) the magnitude of $(\partial v/\partial T)_p$ is. The supercritical isotherms are seen to obey the same regularity: the small slope in the region of small values of v is replaced by an increase in v, with a more and more pronounced slope. It will be noted that in the gas phase the slope of the isobar $(\partial v/\partial T)_p$ diminishes with rising temperature.

As can be seen from the p-T diagram (Fig. 6.13), in the liquid region the isochors run considerably steeper than in the gas region. This can be traced to the already mentioned small compressibility of liquid compared to the compressibility of gas. It will be noted that the isochors of a real gas and of a liquid are curvilinear, with their curvature having different signs: on the isochors with $v < v_{cr}$ we have $(\partial^2 p/\partial T^2)_v > 0$, and on the isochors with $v > v_{cr}$ we have $(\partial^2 p/\partial T^2)_v < 0$. As can be seen from Fig. 6.13, the curvature of the liquid-phase isochors is considerably smaller than in the region of the gas phase. The curvature of the isochors diminishes in the direction of the critical point, and the sign of curvature changes when passing through $v = v_{cr}$; it will be noted that the critical isochor is almost a straight line (in any event, near the critical point). The curvature of the gas-phase isochors diminishes with rising temperature.

Figure 6.16 illustrates the temperature dependence of the quantity $(\partial v/\partial T)_p$ on the subcritical (Fig. 6.16*a*) and supercritical (Fig. 6.16*b*) isobars plotted with the aid of the v-T diagram shown in Fig. 6.12. As can be seen from the graphs, on the subcritical isobars in the liquid-phase region, where $T < T_s$, the value of $(\partial v/\partial T)_p$ increases when approaching the boiling point T_s at a given pressure. At the boiling point T_s there is a discontinuity in the values of $(\partial v/\partial T)_p$. As can be seen from Fig. 6.12, at the boiling point

the quantity $(\partial v/\partial T)_p$ increases abruptly to an infinitely large value, corresponding to the vertical isobaric-isothermal section on the v-T diagram. Then this value decreases abruptly to a finite value corresponding to dry saturated vapour (steam, when we deal with water). A further rise in temperature leads to a decrease in $(\partial v/\partial T)_p$.

For supercritical isobars the dependence $(\partial v/\partial T)_p = f(T)$ is represented by curves that pass through a maximum, the maximum being the more pronounced the closer the given isobar to the critical. As can be seen from Fig. 6.12, at the critical point

$$\left(\frac{\partial v}{\partial T}\right)_p^{cr} = \infty. \tag{6.53}$$

Fig. 6.16

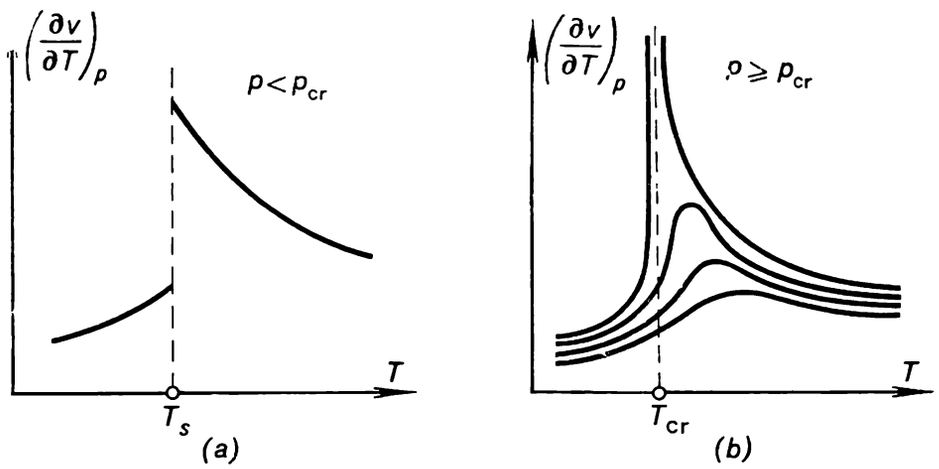

The peaks on the isobars $(\partial v/\partial T)_p = f(T)$ correspond to the points of inflection on the v-T diagram. At these points

$$\left(\frac{\partial^2 v}{\partial T^2}\right)_p = 0. \tag{6.54}$$

It is easy to see that on the v-T diagram the region in which the deflection points of the supercritical isobars lie is the region of the most intensive change in the specific volume of substance with temperature. For the supercritical isobars this region is similar to a certain extent to the saturation line: when passing across the saturation line, v changes abruptly at a certain temperature T_s, and on the supercritical isobars the same abrupt change in volume proves to take place within some temperature interval.

Consider now the caloric properties of a real gas. The dependence of the enthalpy of a real gas on pressure and temperature is clear from the i-T and i-p diagrams (in which the liquid region is also shown) plotted in Figs. 6.17 and 6.18. As can be seen from the diagrams, the form of the dependence of enthalpy on p and T recalls in many ways the dependence of the specific volume on p and T shown in Figs. 6.11 and 6.12. When passing through the saturation line, on the subcritical isobars, the enthalpy changes abruptly from i' (the enthalpy of saturated liquid) to i'' (the enthalpy of dry saturated vapour), this change being represented by the vertical section of the isobar (isotherm) confined between the boundary curves; the length of this section is equal to the latent heat of vapourization, $r = i'' - i'$.

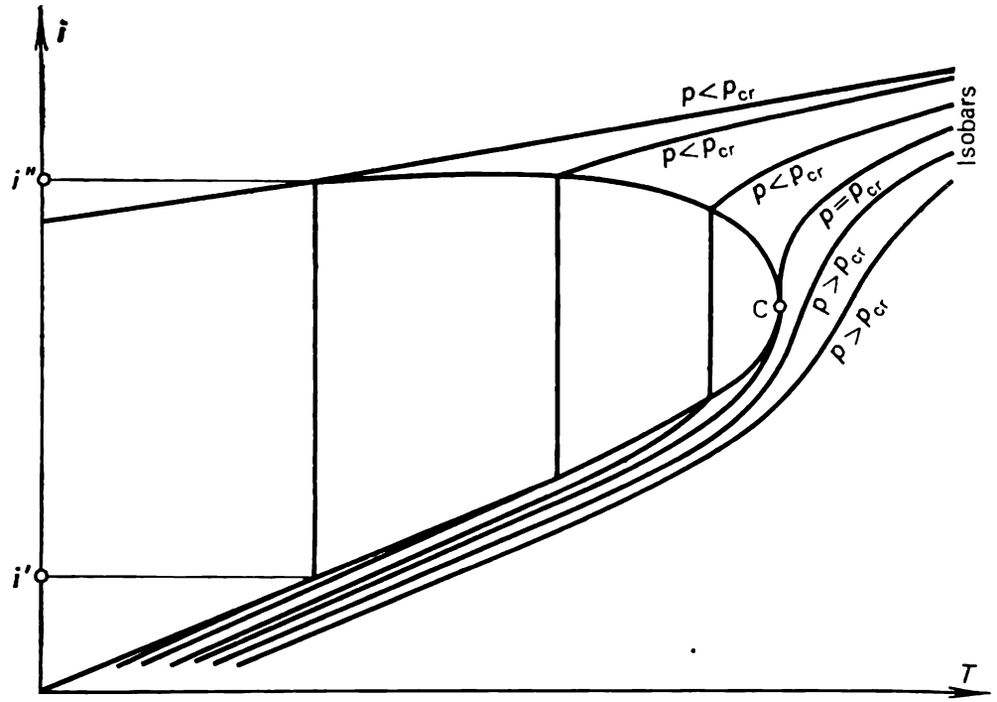

Fig. 6.17

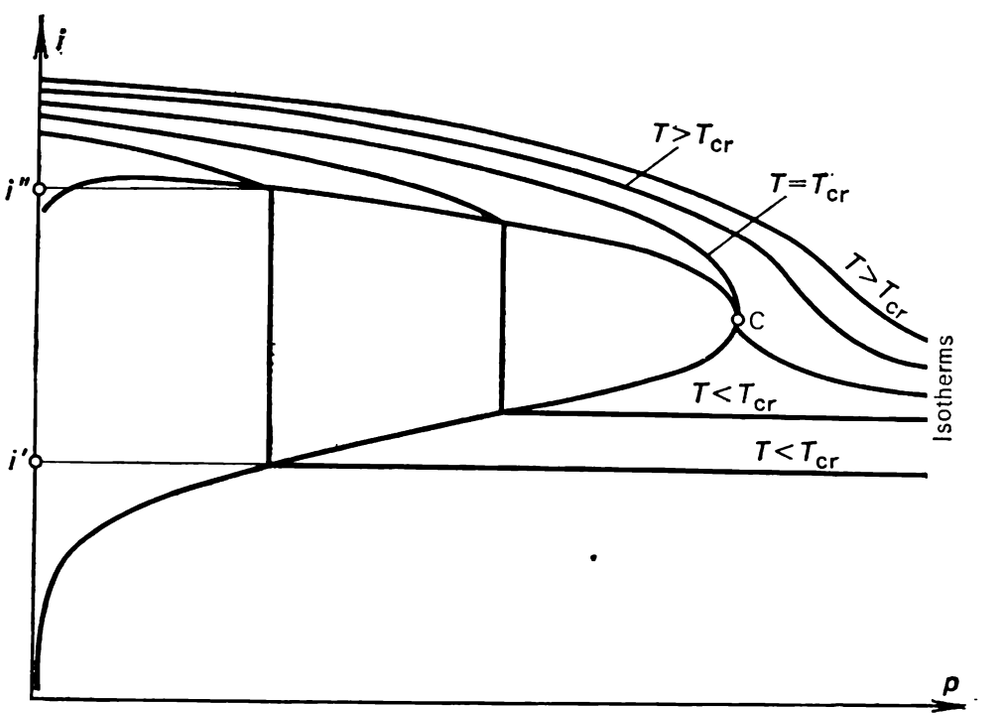

Fig. 6.18

It is clear from Fig. 6.17 that inside the two-phase region the heat capacity $c_p = (\partial i/\partial T)_p$ is infinitely large.

The supercritical isobars and isotherms of enthalpy have a point of inflection in these diagrams. As can be seen from Fig. 6.17, at the critical point

$$\left(\frac{\partial i}{\partial T}\right)_p^{cr} = \infty \tag{6.55}$$

or

$$c_p^{cr} = \infty. \tag{6.56}$$

Shown in Fig. 6.19 is the dependence of the heat capacity c_p of a real gas (water vapour or steam) on temperature at subcritical pressures (the dotted line is the locus of the values of c_p on these isobars at the saturation

Fig. 6.19

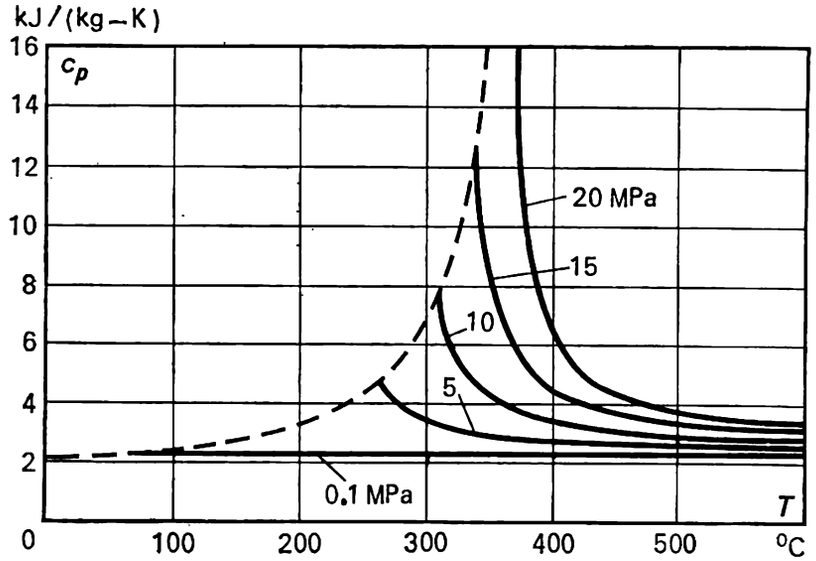

Fig. 6.20

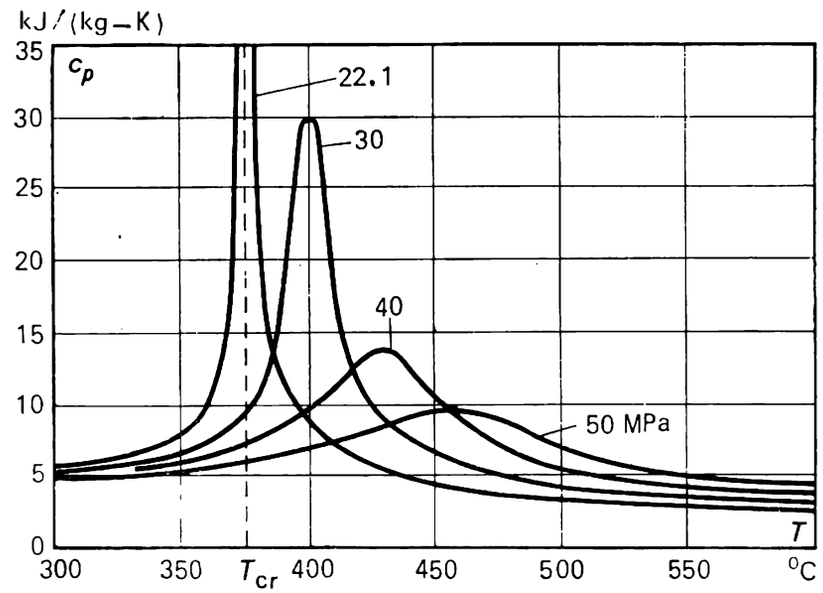

temperature). As can be seen from this graph, the heat capacity c_p rises with pressure at the same temperature. Near the saturation line heat capacity diminishes along the isobars with rising temperature, then passes through a minimum, and a further rise in temperature is accompanied by an increase in c_p. The higher magnitude of the heat capacity c_p near the saturation line is explained by the presence of large associations of molecules in the superheated vapour (steam) at the saturation line.

The dependence of the heat capacity c_p of water vapour on temperature on the supercritical isobars, plotted in Fig. 6.20, is characteristic of real gases. As can be seen from the illustration, the isobars of the heat capacity c_p are curves with a peak, the peaks being the higher and the sharper, the closer a given isobar is to the critical isobar. The nature of the dependence

of c_p on T on the supercritical isobars is similar to the previously considered dependence of $(\partial v/\partial T)_p$ on T on the same isobars. As was already mentioned, the unambiguous relation between heat capacity c_p and the quantity $(\partial v/\partial T)_p$ stems from Eq. (4.55), according to which

$$c_p = T\left(\frac{\partial p}{\partial T}\right)_s\left(\frac{\partial v}{\partial T}\right)_p.$$

Now a few words about the physical meaning of the peaks on the supercritical isobars for c_p. The presence of these peaks can be explained in the same way as the presence of the peaks on the isobars representing the quantity $(\partial v/\partial T)_p$ as a function of temperature T. An increase in the heat capacity of a substance indicates that there are processes taking place in the substance that require the expenditure of a considerable amount of heat. The peaks of heat capacity on the supercritical isobars plotted for a real gas occur in the temperature interval within which intensive disintegration of large molecular associations into smaller ones takes place. If for subcritical pressures this disintegration takes place mainly in the state of saturation, in the supercritical region disintegration is continuous, being stretched out in some temperature interval. As can be seen from Fig. 6.20, the temperature interval of the change of phase is the more extended, the higher the pressure. The previously mentioned intensive change in the specific volume of substance, which takes place in the same region of supercritical isobars, is traced to the same reason, to an increase in the specific volume of liquids and gases due to the breaking up of molecular associations.

The heat capacity of a real gas, c_p, is determined either by experiment or by calculation using the known values of enthalpy or from the p-, v-, T-dependencies of the substance.

If experimental data on the enthalpy of a substance are available, the heat capacity c_p can be calculated from the relationship

$$c_p = \left(\frac{\partial i}{\partial T}\right)_p.$$

But if data on the p-, v-, T-dependencies are known, the heat capacity c_p at a pressure p and temperature T can be calculated from the relationship

$$c_p(p, T) = c_{p_0}(T) + \int_0^p \left(\frac{\partial c_p}{\partial p}\right)_T dp, \tag{6.57}$$

which, with account taken of Eq. (4.57), can be reduced to

$$c_p(p, T) = c_{p_0}(T) - T\int_0^p \left(\frac{\partial^2 v}{\partial T^2}\right)_p dp. \tag{6.58}$$

In Eq. (6.58) the term $c_{p_0}(T)$ stands for the heat capacity of the substance at $p \to 0$, i.e. in the ideal-gas state. The first term in the right-hand side of this equation represents the fraction of the heat capacity of a real gas that depends only on temperature (the heat capacity of an ideal gas) and, consequently, does not change with pressure; the second term is the fraction of the heat capacity depending on pressure. Based on the data on the p-, v-, T-dependencies, Eq. (6.58) is used to calculate not the absolute value of heat capacity $c_p(p, T)$ but only the difference $[c_p(p, T) - c_{p_0}(T)]$.

It will be recalled that, as was demonstrated in Chapter 2, for a substance in the ideal-gas state the heat capacities c_p and c_v, the enthalpy i and the internal energy u depend only on temperature. The quantities i, u and c_p of a substance in the ideal-gas state (only realized at $p \to 0$) will from now

on be additionally denoted by the subscript "0" (zero density), and the quantity c_v of a substance in the ideal-gas state by the subscript ∞ (infinitely large specific volume). Methods of quantum statistics permit highly-accurate calculation of c_{p_0} and c_{v_∞}* based on the data on the molecular structure of a given substance.

The enthalpy of a real gas can be determined either experimentally or from known values of c_p or from the data on the p-, v-, T-dependency for the substance involved. If on a given isobar the magnitude of enthalpy at a temperature T_0 and the data on the heat capacity c_p on this isobar are known, the enthalpy at a temperature T can be determined with the aid of equations similar to Eq. (6.28):

$$i(p, T) = i(p, T_0) + \int_{T_0}^{T} c_p dT.$$

In particular, if for the pressure considered only the enthalpy of vapour on the saturation line, i'', is known, then

$$i(p, T) = i''(T_s) + \int_{T_s}^{T} c_p \, dT. \tag{6.61}$$

The data on the p-, v-, T-dependency can be used to determine the enthalpy using the relationship

$$i(p, T) = i_0(T) + \int_0^p \left(\frac{\partial i}{\partial p}\right)_T dp, \tag{6.62}$$

which, allowing for Eq. (4.31), takes the following form:

$$i(p, T) = i_0(T) = \int_0^p \left[v - T\left(\frac{\partial v}{\partial T}\right)_p\right] dp. \tag{6.63}$$

By analogy, it is easy to derive similar relationships for the heat capacity c_v and internal energy u:

$$c_v(v, T) = c_{v_\infty}(T) + T \int_\infty^v \left(\frac{\partial^2 p}{\partial T^2}\right)_v dv, \tag{6.64}$$

$$u(v, T) = u(v, T_0) + \int_{T_0}^{T} c_v \, dT \tag{6.65}$$

---

* Consequently, also i_0 and u_0, since

$$i_0(T) = i_0(T_0) + \int_{T_0}^{T} c_{p_0} \, dT, \tag{6.59}$$

$$u_0(T) = u_0(T_0) + \int_{T_0}^{T} c_{v_\infty} dT. \tag{6.60}$$

and

$$u(v, T) = u_0(T) + \int_{\infty}^{v} \left[T \left(\frac{\partial p}{\partial T} \right)_v - p \right] dv. \tag{6.66}$$

Heat capacity c_v, whose determination by experiment involves great difficulties, can also be calculated from the known data on the heat capacity c_p with the aid of Eq. (4.52), and the magnitude of internal energy, from the known magnitude of enthalpy by means of Eq. (2.47a).

The derivatives of thermal quantities and their integrals, present in Eqs. (6.63) to (6.66), can be calculated both by numerical methods directly from the experimental data on the p-, v-, T-dependencies or with the aid of the equation of state for a real gas.

The importance of the problem of deriving the equation that describes adequately the thermodynamic properties of a real gas is obvious. An equation of state can be considered to be satisfactory if it not only describes with sufficient accuracy the p-, v-, T-dependencies for a real gas but permits, making use of the differential equations of thermodynamics, to calculate with sufficient accuracy such caloric quantities as enthalpy and heat capacities c_p and c_v of a real gas.

A great number of attempts is known to be undertaken to derive a theoretically substantiated equation of state, an equation valid for a real gas in a sufficiently wide region of states. In 1937-46 a great stride in this direction was made by the American physicist J. E. Mayer and the Soviet mathematician N. N. Bogolyubov. Applying methods of statistical physics, Mayer and Bogolyubov proved that the equation of state for a real gas has the following most general form:

$$pv = RT \left(1 - \sum_{k=1}^{\infty} \frac{k}{k+1} \frac{\beta_k}{v^k} \right), \tag{6.67}$$

where β_k are coefficients depending only on temperature (the so-called *virial coefficients*). The expression in the parentheses in the right-hand side of *Mayer-Bogolyubov's equation*, represents a power series in $1/v$. It is clear that the greater the specific volume of the gas v, the smaller the number of terms of the series should be taken into account to obtain a sufficiently accurate result. It follows from Eq. (6.67) that at $v \to \infty$, all terms of the power series turn into zero and the equation takes the following form:

$$pv = RT,$$

i.e. as it was to be expected, for the region of small densities Mayer-Bogolyubov's equation turns into Clapeyron's equation. The virial coefficients β_k cannot be calculated by means of purely theoretical methods and should, therefore, be determined by experiment.

The problem of determining the virial coefficients proves to be often so involved that it is more expedient to derive an equation of state in the form of an interpolation formula that describes experimental data.

At the present time many equations of state of this kind are available for various substances in different regions of state (including the liquid region). All these equations are empirical or semiempirical in nature. Equations of this type are, as a rule, power series, usually in the form of $v =$

$= f(p, T)$, in which the numerical coefficients of the terms in the series are selected on the basis of the experimental data.

A clear visual presentation of the deviation of the properties of a real gas from those of an ideal gas can be obtained plotting the relationship between p, v and T of a gas on a $pv = f(p)$ diagram shown in Fig. 6.21. In this diagram the solid lines are isotherms and the shaded area corresponds to the two-phase region.

Fig. 6.21

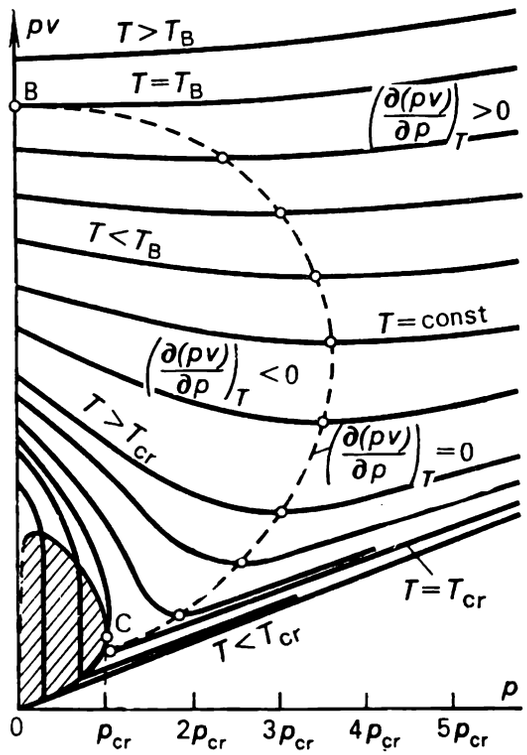

It follows from Clapeyron's equation that in a pv-p diagram the isotherms of an ideal gas are horizontal straight lines.

This diagram can be most conveniently analyzed using the equation of state for a real gas expressed in the form of the so-called *virial expansion*

$$pv = A + Bp + Cp^2 + Dp^3 + \ldots, \tag{6.68}$$

where A, B, C, D, etc. are virial coefficients depending only on temperature. The first virial coefficient A is equal to RT.

It follows from expansion (6.68) that on the pv-p diagram the y-axis corresponds to the ideal-gas state of substance: at $p = 0$ Eq. (6.68) reduces to Clapeyron's equation and, consequently, the positions of the points of intersections between the isotherms and the y-axis correspond to the values of RT for each of the isotherms. It also follows from (6.68) that

$$\left(\frac{\partial pv}{\partial p}\right)_{T,\, p=0} = B. \tag{6.69}$$

Consequently, in the coordinates considered the slope of a real-gas isotherm at the point of intersection of this isotherm with the y-axis ($p = 0$) gives the magnitude of the second virial coefficient.

As can be seen from Fig. 6.21, the isotherms correspond ing to temperatures $T < T_B$ pass through a minimum, and at this point

$$\left(\frac{\partial pv}{\partial p}\right)_T = 0. \tag{6.70}$$

It will be recalled that this relationship is always valid for an ideal gas (the horizontal isotherms on the *pv-p* diagram). The curve representing the locus of the minima of the isotherms on the *pv-p* diagram is called the *Boyle curve* (the dotted line in Fig. 6.21).

The isotherm $T_B = \text{const}$ is characterized by that its minimum point merges with (lies on) the *y*-axis, as can be seen from Fig. 6.21 (point B). In other words, on this isotherm

$$\left(\frac{\partial pv}{\partial p}\right)_{T,\ p=0} = 0.$$

This means that at a temperature T_B the second virial coefficient (B) turns into zero. When $T < T_B$, the second virial coefficient is negative, when $T > T_B$, positive. The temperature T_B at which the second virial coefficient for a given gas is equal to zero is referred to as *Boyle's temperature*, and point B is called *Boyle's point*. For many substances the approximate value of Boyle's temperature can be estimated with the aid of the following approximate empirical relationship

$$\frac{T_B}{T_{cr}} \cong 2.75.$$

As can be seen from the *pv-p* diagram, the initial section of the isotherm $T_B = \text{const}$, corresponding to comparatively low pressures, is sufficiently close to a horizontal straight line, which is of great interest, showing that at $T = T_B$ the properties of a real gas are close to these of an ideal gas.

Consider now the problem involving the description of the thermodynamic properties of real gases and liquids (fluids) with the aid of the method of thermodynamic similarity.

As was shown in the preceding section, written in the dimensionless (reduced) form Van der Waals' equation contains no constants that characterize the individual properties of this or another substance. From this fact follows the so-called *law of corresponding states*:

If two substances that obey the Van der Waals equation or some other equation of state are written in the dimensionless form and have two of the three reduced properties of state (π, τ or ω) equal, the third reduced property of state will also be equal for the substances involved.

The states of the two substances in which the values of π, τ and ω are equal are referred to as *corresponding states*. It can easily be shown that the law of corresponding states pertains not only to the *p*-, *v*-, *T*-dependencies but can also be applied to caloric quantities (except the quantities in the ideal-gas state).

Substances which satisfy the law of corresponding states are said to be *thermodynamically similar substances*.

The possibility of using the method of thermodynamic similarity seems to be tempting. Indeed, if two substances are thermodynamically similar and if the thermodynamic properties of one of these substances are known, there is no need in a detailed experimental investigation of the properties of

the other substance and it is sufficient to determine the critical parameters of this substance. For instance, having calculated for this second substance the values of π and τ for the values of p and T which are of interest to us and having found for these values π and τ the value of ω from the known data on the first substance, the known value of v_{cr} for the second substance can be used to find easily the value of $v = \omega v_{cr}$ for the second substance in the state p and T which is of interest.

Unfortunately, the problem of thermodynamic similarity is not as simple as it may seem to be at first sight, the reason for this being as follows. We know from mathematics that it is possible to reduce into the dimensionless form only equations in which the number of constants does not exceed the number of independent equations describing the properties of a given surface. As applied to a thermodynamic surface, such independent equations are: the equation of state and the two Eqs. (6.34) and (6.35) that describe the conditions at the critical point, i.e. three equations in all. The number of constants in Van der Waals' equation (a, b and R) is equal to the number of these equations; it will be recalled that the constants a and b present in the Van der Waals equation were determined with the aid of the conditions at the critical point (6.34) and (6.35). As to real gases, their equation of state, the Mayer-Bogolyubov equation, has a number of constants exceeding considerably the number of equations. It follows from this that, when expressed in the general form, the equation of state for a real gas cannot be reduced to the dimensionless form. That is why the law of corresponding states, which is strictly valid only for substances described by reduced equations of state, is not true for real substances (i.e., strictly speaking, there are no thermodynamically similar substances).

Experience, however, shows that the law of corresponding states also approximately governs the behaviour of a number of real substances, that do not satisfy the reduced equations of state. The law of corresponding states is applied to real substances by using a calculation method based on the so-called correlated data. The essence of this method consists in the following. The law of corresponding states has been shown to be the more true, the closer to each other are the substances involved with respect to their physical and chemical properties. A number of criteria can be found, determining how close are these properties of the substances. Usually as such criteria are used the more or less equal chemical composition of the substances (for instance, hydrocarbons, halogens, inert gases, etc.), close values of critical coefficients $[z_{cr} = p_{cr}v_{cr}/(RT_{cr})]$, etc.

Real substances can be combined into several groups on the basis of the constancy of this or another similarity criterion, for instance, of z_{cr}.

The quantities $\omega = f(\pi, \tau)$ for each such group are calculated by an averaging (or, as it is said, correlation) over the data on π, ω and τ available for some of the substances of the group. As regards other substances, for which no such data are available, the value of ω for this substance can be found, for given values of π and τ, from the correlated data for this group*.

---

* In order to avoid misunderstandings it will be emphasized that with π and τ given the value of ω is determined not from the reduced Van der Waals equation but from the correlated π-ω-τ-dependencies for the given group of substances; this can be presented graphically as $\omega = f(\pi, \tau)$ or the data can be tabulated.

It will be emphasized once more that the method described is an approximate one. It is suitable for a number of estimating calculations, made for substances for which no experimental data on thermodynamic properties are available.

Thermodynamic properties of water vapour (steam)

Water vapour, or steam, is the basic working medium of modern heat and power engineering. It is also widely used for processing. That is why the investigations of the thermodynamic properties of water and steam are of paramount importance. The data on the properties of water and steam, designed for practical usage in various engineering calculations, are usually compiled in detailed tables of thermodynamic properties. These tables usually contain data calculated from the equations of state with coefficients based on experimental data. For some of the regions which are most difficult to describe with the aid of the equations of state (primarily, the near-critical region and also the region close to the saturation line), the tables are often compiled directly from experimental data with the aid of graphical and numerical methods. In the last few years investigators have been concentrating on the derivation of equations of state suitable for computers.

The tables of the thermodynamic properties of water and steam most widely used in the U.S.S.R. were compiled under the supervision of M. P. Vukalovich.

6.5 Thermodynamic properties of substances on the change-of-phase line. Two-phase systems

Consider the main regularities governing the change in the thermodynamic properties of substances on the saturation line, mainly the liquid-vapour phase change boundary, bearing in mind that all relationships obtained will be also valid for other changes of phase.

As was already mentioned, the lines connecting in the diagrams of state the points at which a change of phase initiates and terminates are referred to as the boundary curves (or lines). The region confined between two boundary lines is called the *two-phase region.* Within this region the substance is in the form of a mixture consisting of the two coexisting phases (for instance, a mixture of a liquid and its vapour); a mixture of this kind is called a *two-phase mixture.*

The boundary curve separating the two-phase region from the region in which the substance is in a gaseous state (superheated vapour region) is called the *upper boundary curve*, and the boundary curve separating the two-phase region from the liquid region is referred to as the *lower boundary curve.*

The values of the thermodynamic quantities on the boundary curves are functions of only one variable. For instance, the value of the specific volume of a boiling liquid, v', is uniquely determined from the value of the saturation temperature or pressure.

Shown in Fig. 6.22 is the dependence of the difference between the specific volumes of the coexisting phases ($v'' - v'$) on temperature for water and steam, and the dependence of the latent heat of vapourization of water on

temperature is shown graphically in Fig. 6.23. As can be seen from these graphs, the magnitudes of $r = f(T)$ and $(v'' - v') = f(T)$ decrease monotonically with rising temperature, turning into zero at the critical point.

Fig. 6.22

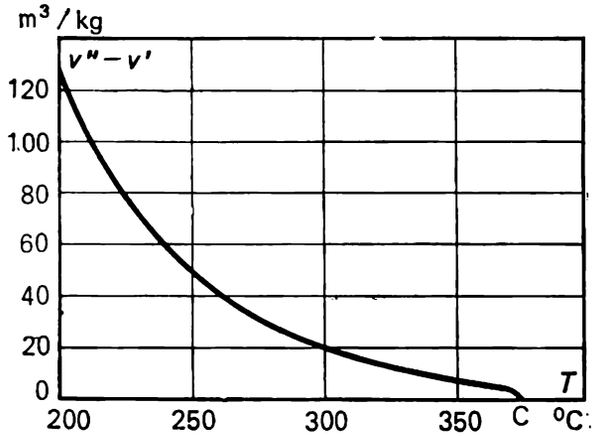

Fig. 6.23

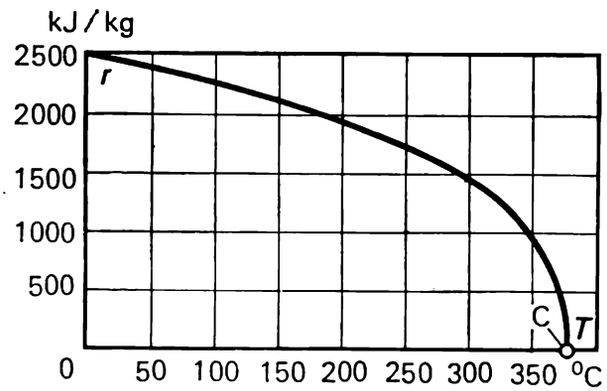

For other substances these quantities depend on temperature in a similar way.

As was shown experimentally for all substances, the curves $r = f(T)$ and $(v'' - v') = f(T)$ have a normal tangent at the critical point, and since, as can be seen from Figs. 6.22 and 6.23, the values dr/dT and $d(v'' - v')/dT$ are negative, it follows that

$$\left(\frac{dr}{dT}\right)_{cr} = -\infty \tag{6.71}$$

and

$$\left[\frac{d(v'' - v')}{dT}\right]_{cr} = -\infty. \tag{6.72}$$

It might be well to point out several useful empirical relationships which happen to be useful for numerical estimations. It was shown by the French physicists L. Cailletet and E. Mathias (1886) that the half-sum of densities on the boundary curves, $\rho_{cr} = (\rho' + \rho'')/2$, happens to be a linear function of temperature. In other words, in ρ, T-coordinates the line $(\rho' + \rho'')/2$ is a straight line (see, for instance, the experimental graph in Fig. 6.24 plotted for carbon dioxide). This regularity (usually referred to as the *Cailletet-Mathias law of the rectilinear diameter*) is purely empirical.

The law of the rectilinear diameter can be used, for instance, to find the value of v'' (T) for all the temperatures at which the values of v' are known, and the values of v'' at only two points should be available.

If the rectilinear shape of the diameter is known from the values of v' and v'' for temperatures far from the critical point and if the critical temperature is known, the law of the rectilinear diameter can be used to find the specific volume of substance at the critical point v^*_{cr}. For this purpose let us draw on the ρ-T diagram the line of the rectilinear diameter until it intersects the vertical line T_{cr} = const; the ordinate at the point of intersection will be $\rho_{cr} = 1/v_{cr}$. It should be emphasized, however, that a detailed analysis shows that this method of determining v_{cr} is not very accurate, inasmuch

Fig. 6.24

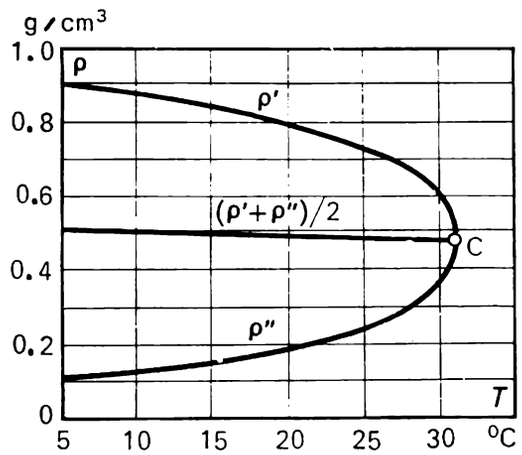

as for many substances the linear nature of the dependence $(\rho' + \rho'')/2 = f(T)$ is disturbed near the critical point, and the line is distorted.

The magnitude of the latent heat of vapourization r at standard pressure (760 mm Hg = 101.235 kPa = 1.033 kgf/cm²) can be estimated with the aid of the empirical relationship, known as *Trouton's rule*, in accordance with which

$$\Theta = \frac{\mu r}{T_b} = 84\text{-}92, \tag{6.73}$$

where μr is the molar latent heat of vapourization at standard pressure (measured in kJ/kmol), and T_b is the boiling point of liquid at the same pressure (measured in kelvins). If μr is expressed in kcal/kmol,

$$\Theta = 20\text{-}22. \tag{6.73}$$

The latent heat of vapourization of many substances deviate greatly from Trouton's rule. For instance, for water Θ = 109 kJ/(kmol-K). Best results are obtained for weakly associated substances.

By analogy, the molar latent heat of fusion of solids can be determined with the aid of the following relationships:

for elements

$$\frac{\mu\lambda}{T_{melt}} = 8\text{-}13 \text{ kJ/(kmol-K)} = 2\text{-}3 \text{ kcal/(kmol-K)}; \tag{6.74}$$

* It is by far more difficult to determine the value of v_{cr} by experiment than the value of the critical temperature T_{cr}.

for inorganic compounds

$$\frac{\mu\lambda}{T_{melt}} = 21\text{-}29 \text{ kJ/(kmol-K)} = 5\text{-}7 \text{ kcal/(kmol-K)}; \tag{6.75}$$

Fig. 6.25

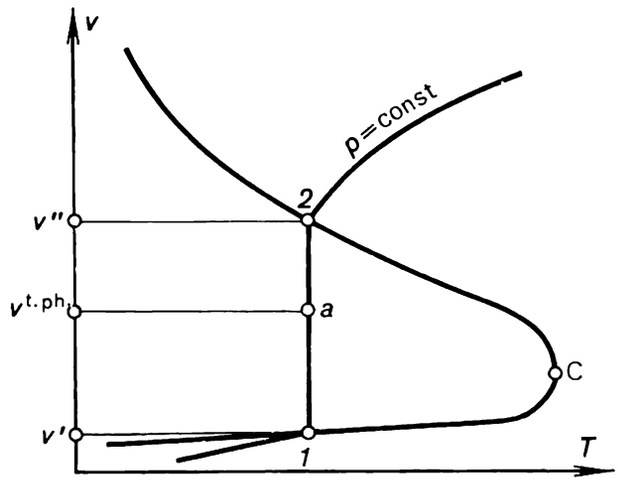

Fig. 6.26

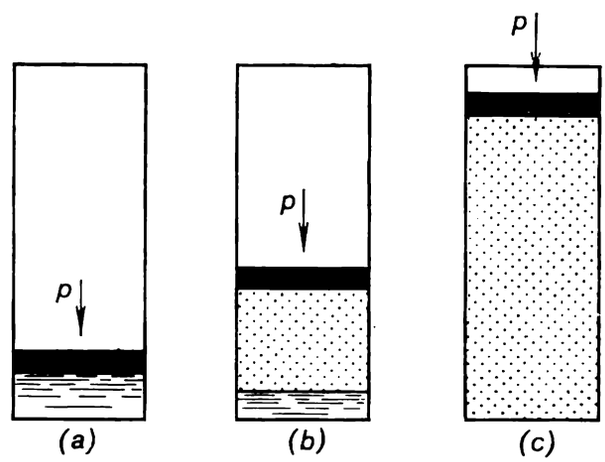

for organic compounds

$$\frac{\mu\lambda}{T_{melt}} = 42\text{-}67 \text{ kJ/(kmol-K)} = 10\text{-}16 \text{ kcal/(kmol-K)}. \tag{6.76}$$

As can be seen from the v-T diagram in Fig. 6.25, a substance undergoing a change in phase passes through a number of states lying on the section of the isobar (isotherm) confined between the boundary curves (section *1-2*). In order to ascertain this, consider the scheme of the liquid-vapour phase change depicted in Fig. 6.26. Heat is added continuously from an outside source of heat to the liquid poured into a cylindrical vessel with a freely moving piston. It can be seen from the illustration that the liquid in the vessel is under a constant external pressure. Consequently, in the vessel the change of phase will proceed along an isobar which coincides with an isotherm in this case. Fig. 6.26*a* illustrates the state of the system at the moment when the liquid is already heated to the boiling point at the given pressure but, however, no vapourization has yet started. It is clear that on

the v-T diagram (Fig. 6.25) this state is represented by point *1*. A further addition of heat to the system will bring about evaporation of the liquid. Inasmuch as the specific volume of vapour (v'') is considerably greater than the specific volume of liquid (v'), as the liquid evaporates, the piston will rise in the cylinder. Since the mass of substance confined in the vessel (G) remains constant throughout the process of vapourization, and the volume occupied by the substance (V) will increase, as the liquid evaporates, consequently, the specific volume of substance in the vessel, $v = V/G$, increases along an isobar, with the amount of liquid diminishing and the amount of the formed vapour increasing. The state of the system, corresponding to the state inside the two-phase region, is depicted in Fig. 6.26*b*. In this state the system is a two-phase mixture, consisting of G_l kg of saturated liquid (its specific volume is v') and G_v kg of saturated vapour (its specific volume is v''). The total mass of substance in the vessel is constant and equal to

$$G = G_l + G_v = \text{const}. \tag{6.77}$$

The specific volume of the two-phase mixture $v^{\text{t.ph.}}$ is greater than the specific volume of the boiling liquid and smaller than the volume of the saturated vapour component of the mixture:

$$v' \leqslant v^{\text{t.ph.}} \leqslant v''.$$

At the moment when all the liquid previously contained in the vessel is evaporated, the state of substance in the vessel (Fig. 6.26*c*) will be represented by point *2* on the v-T diagram (Fig. 6.25).

Further addition of heat will result in the superheating of the vapo ur.

The following terminology has been adopted: a two-phase liquid-vapour mixture is called *wet vapour**; saturated vapour containing no moisture is referred to as *dry saturated vapour* (or steam when the substance considered is water). Thus, wet vapour is a mixture of saturated liquid and dry saturated vapour. Vapour at a temperature exceeding the saturation temperature at a given pressure is called *superheated vapour.*

It is clear that in order to be in a position to determine unambiguously the state of a two-phase system, we must know the ratio between the masses of the liquid and its vapour. The degree of dryness, or the *dryness fraction*, of a two-phase system, is the ratio x of the mass of dry saturated vapour contained in the mixture, G_v, to the total mass of the mixture, G:

$$x = \frac{G_v}{G}, \tag{6.78}$$

or

$$x = \frac{G_v}{G_l + G_v}. \tag{6.78a}$$

It follows from the foregoing that the content of liquid in the mixture is determined from the relationship

$$1 - x = \frac{G_l}{G_v + G_l}. \tag{6.78b}$$

---

* Strictly speaking, wet vapour is a two-phase mixture, representing a vapour with droplets of liquid suspended in it. This name is sometimes given, however, to two-phase systems in which the saturated vapour occupies the space above the level of liquid (as illustrated in Fig. 6.26*b*).

The quantity $(1 - x)$ is called the *degree of wetness* of a two-phase mixture.

The state $x = 1$ corresponds to dry saturated vapour (upper boundary curve), and the state $x = 0$ to saturated liquid (lower boundary curve).

Since, as it was already mentioned, volume, enthalpy, internal energy, and entropy are extensive quantities and, consequently, possess the properties of additivity, for the specific values of these quantities in the two-

Fig. 6.27

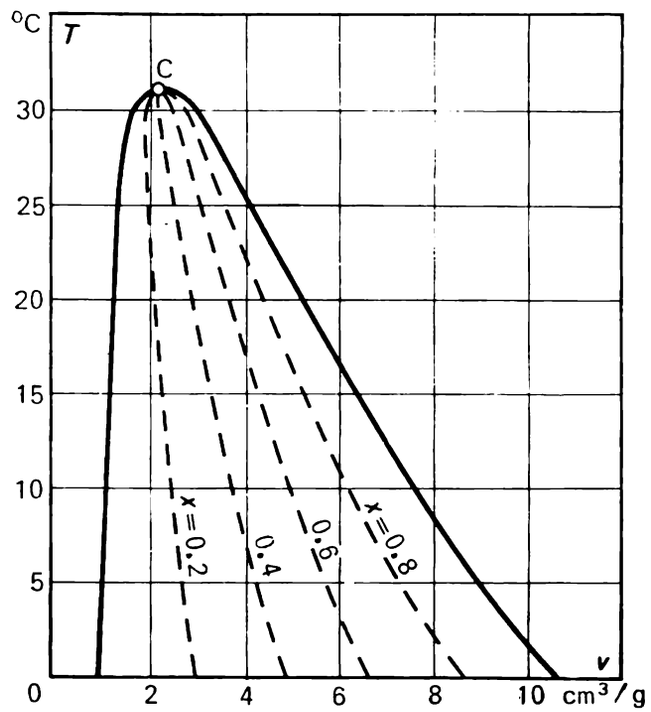

phase region the following relationships are valid:

$$v^{\text{t.ph.}} = v'(1 - x) + v''x, \tag{6.79}$$

$$i^{\text{t.ph.}} = i'(1 - x) + i''x, \tag{6.80}$$

$$u^{\text{t.ph.}} = u'(1 - x) + u''x, \tag{6.81}$$

$$s^{\text{t.ph.}} = s'(1 - x) + s''x. \tag{6.82}$$

Temperature (or saturation pressure related with it unambiguously) and the dryness fraction of vapour determine the state of a two-phase system. To determine the state of each phase it is sufficient, however, to know only temperature (pressure). All the other thermal properties and the caloric functions will be determined for the two phases unambiguously. That is why from the phase-rule point of view the system has one degree of freedom.

It follows from Eqs. (6.79) to (6.82) that the dryness fraction of vapour can be expressed as follows:

$$x = \frac{v^{\text{t.ph.}} - v'}{v'' - v'} = \frac{i^{\text{t.ph.}} - i'}{i'' - i'} = \frac{u^{\text{t.ph.}} - u'}{u'' - u'} = \frac{s^{\text{t.ph.}} - s'}{s'' - s'} \tag{6.83}$$

Relationship (6.83) can be used, in particular, to determine the slope of the lines representing the constant dryness fraction in any diagram of state. In Fig. 6.27 the lines x = const in a two-phase region are plotted on the

v-T diagram for carbon dioxide. On this diagram the lines are plotted for $x = 0.2$, $x = 0.4$, $x = 0.6$, and $x = 0.8$. It is clear that lines of constant dryness fraction can be plotted for any values $0 \leqslant x \leqslant 1$. In accordance with the foregoing, the line $x = 1$ coincides with the upper, and the line $x = 0$ with the lower, boundary curves. All the lines $x = \text{const}$ merge at the critical point. The presence of the lines of constant dryness fraction

Fig. 6.28

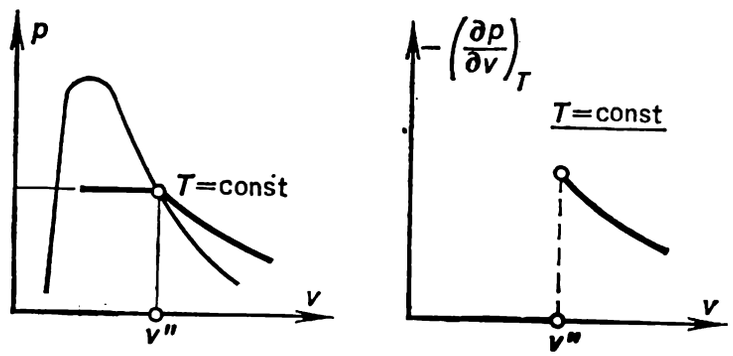

Fig. 6.29

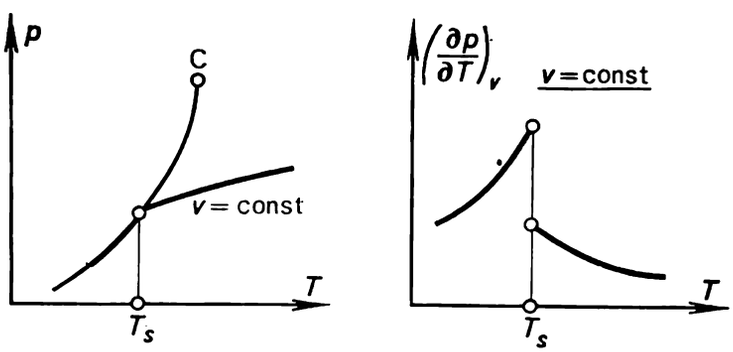

on the diagrams of state facilitates various calculations with the aid of these diagrams.

Speaking of the properties of a two-phase mixture, it should be noted that in the two-phase region

$$\left(\frac{\partial p}{\partial v}\right)_T^{\text{t.ph.}} = 0, \tag{6.84}$$

$$\left(\frac{\partial T}{\partial v}\right)_p^{\text{t.ph.}} = 0 \tag{6.85}$$

and

$$c_p^{\text{t.ph.}} = \infty. \tag{6.86}$$

These relationships, whose validity is clear from the p-v, v-T, and i-T diagrams shown in Figs. 6.11, 6.12 and 6.17, can also be obtained from Eqs. (6.79) and (6.80).

Let us consider now some distinctive characteristics inherent in the thermodynamic quantities on the two boundary curves.

Precision experimental data have shown the isobars on the v-T diagram, the isotherms on the p-v diagram and the isochors on the p-T diagram to have a removable discontinuity as they pass through the boundary curve. This can be seen from the diagrams of state shown in Figs. 6.11 to 6.13.

From this it follows that the value of the derivative, for instance $(\partial p/\partial v)_T^s$, happens to be different, at the point where the isotherm crosses the boundary curve depending on whether this point is approached from the single-phase side or from the two-phase side, as illustrated in Fig. 6.28. In the first case (see Fig. 6.28) the derivative is finite, and in the second case it turns into zero in accordance with Eq. (6.84). Shown in Fig. 6.29 is the discontinuity of the isochor when it passes through the boundary curve on the p-T diagram and also the values of the derivative $(\partial p/\partial T)_v^s$ when it approaches the point of discontinuity from different sides of the boundary curve. A similar thing happens in other diagrams of state. In other words, the derivatives of thermal quantities $(\partial T/\partial v)_p$, $(\partial p/\partial v)_T$, $(\partial p/\partial T)_v$, and also a number of other thermodynamic quantities, have a discontinuity as they pass through the boundary curve.

As can be seen from the i-T diagram, shown in Fig. 6.17, the isobar has a discontinuity at the point where it passes through the boundary curve. Hence, there is a jump in the value of the derivative $(\partial i/\partial T)_p$ as the line representing the derivative passes through the boundary curve, i.e. the heat capacity c_p changes abruptly.

6.6 Properties of substance at the critical point

As was shown in Sec. 6.3, the critical point is such a point on the saturation line at which the difference between the liquid and vapour phases disappears.

As was already mentioned, the following relationships hold at the critical point:

$$v'' = v' = v_{\text{cr}},$$

$$\left(\frac{\partial p}{\partial v}\right)_T^{\text{cr}} = 0,$$

and

$$\left(\frac{\partial^2 p}{\partial v^2}\right)_T^{\text{cr}} = 0.$$

These relationships show that on the p-v diagram the critical isotherm has a horizontal tangent and an inflection at the critical point. Also

$$c_p^{\text{cr}} = \infty. \tag{6.55a}$$

i.e. at the critical point (just as at any point within the two-phase region) the heat capacity c_p is infinitely large.

Finally, it was mentioned in Sec. 6.5 that

$$\left(\frac{dr}{dT}\right)_{\text{cr}} = -\infty,$$

$$\left[\frac{d(v''-v')}{dT}\right]_{\text{cr}} = -\infty.$$

An analysis of the diagrams of state also permits other conclusions concerning the values of a number of thermodynamic quantities at the critical point to be made. An analysis of the nature of the critical isobar plotted on the v-T diagram (Fig. 6.12) shows that the following relationships are

valid at the critical point:

$$\left(\frac{\partial T}{\partial v}\right)_p^{cr} = 0 \tag{6.87}$$

and

$$\left(\frac{\partial^2 T}{\partial v^2}\right)_p^{cr} = 0. \tag{6.88}$$

It follows from Eq. (6.55a) that

$$\left(\frac{\partial T}{\partial s}\right)_p^{cr} = 0. \tag{6.89}$$

As can be seen from the v-T diagram, plotted in Fig. 6.12, at the critical point the total derivative of the specific volume on the saturation line with respect to temperature, dv_s/dT, becomes infinitely large. It is clear that

$$\lim_{T_s \to T_{cr}} \frac{dv'}{dT} = \infty, \tag{6.90}$$

$$\lim_{T_s \to T_{cr}} \frac{dv''}{dT} = -\infty. \tag{6.91}$$

Speaking of the nature of the boundary curve in the vicinity of the critical point on the v-T diagram, the so-called *parabola rule*, suggested by E. Mathias, should be mentioned. In accordance with this empirical rule, near the critical point, the specific volume v_s changes on the left and right boundary curves according to the law

$$v_s - v_{cr} = D\sqrt{T_{cr} - T}, \tag{6.92}$$

where D is a constant. Thus, in accordance with the parabola rule, on the v-T diagram the boundary curve near the critical point is a symmetric parabola. This empirical rule happens to be useful in extrapolating to the critical temperature the data for the v_s-, T_s-dependencies obtained at lower temperatures, using the law of the rectilinear diameter.

A detailed analysis shows that for the critical point the following relationship is true:

$$\left(\frac{dp}{dT}\right)_{cr} = \left(\frac{\partial p}{\partial T}\right)_{v_{cr}}^{s}. \tag{6.93}$$

This equation, known as *Planck-Gibbs' equation*, shows that at the critical point the saturation line conjugates smoothly with the critical isochor v_{cr} = const (see, for example, the p-T diagram for water shown in Fig. 6.30).

We can also show that the relationship

$$\left(\frac{dp}{dT}\right)_{cr} = \left(\frac{\partial p}{\partial T}\right)_{i_{cr}}^{s} = \left(\frac{\partial p}{\partial T}\right)_{s_{cr}}^{s} = \left(\frac{\partial p}{\partial T}\right)_{u_{cr}}^{s} \tag{6.94}$$

is true for the critical point.

Relationship (6.94) shows that at the critical point the lines s = const, i = const and u = const, just as the critical isochor, have a common tangent with the saturation line (Fig. 6.30).

Data on p-v-T measurements show that near the critical point the critical isochor is practically a straight line. This is also corroborated by the data

on the heat capacity c_v: in the (c_v, v)-plane c_v has its maximum value on the critical isotherm at $v = v_{cr}$ (this phenomenon is illustrated in Fig. 6.31 where the diagram is based on experimental data for water). Consequently,

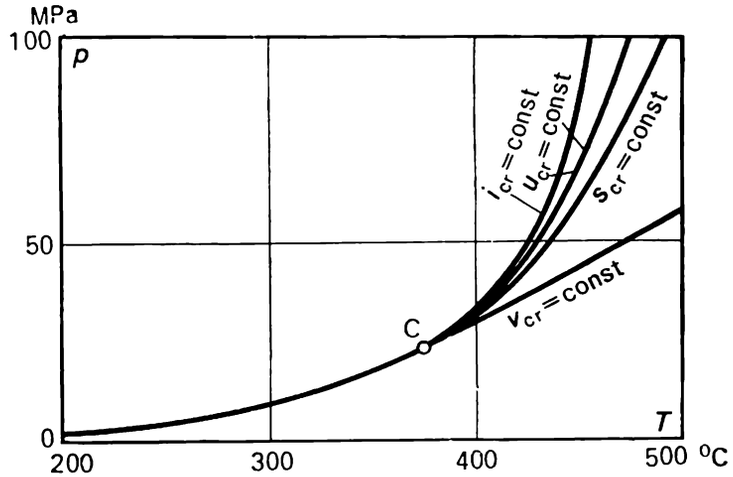

Fig. 6.30

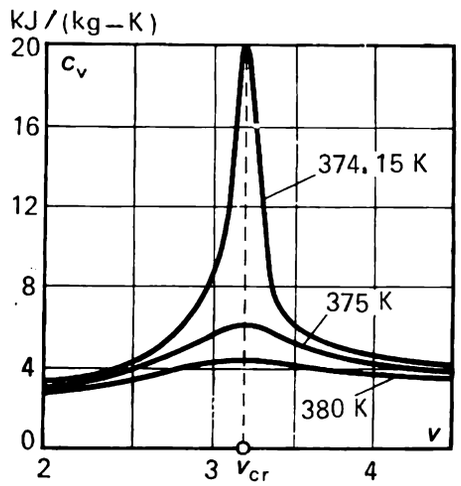

Fig. 6.31

at the critical point

$$\left(\frac{\partial c_v}{\partial v}\right)_{T_{cr}} = 0,$$

and since, in accordance with Eq. (4.58),

$$\left(\frac{\partial c_v}{\partial v}\right)_T = T\left(\frac{\partial^2 p}{\partial T^2}\right)_v,$$

it follows that

$$\left(\frac{\partial^2 p}{\partial T^2}\right)_v^{cr} = 0.$$

This relationship shows that at the critical point the curvature of the critical isobar is zero, i.e. the isobar is a straight line at this point. As to higher temperatures, the critical isochor becomes curved with rising temperature. This, in particular, is evidenced by the fact that with rising temperature the points at which c_v is maximal on the supercritical isotherms shift

to values of v greater than v_{cr}. Consequently, at these temperatures the values of $(\partial^2 p/\partial T^2)_v$ on the isochor $v = v_{cr}$ already differ from zero.

Speaking of the properties of substance at the critical point, it ought to be mentioned that there is a number of problems that have not been yet solved unambiguously. These problems concern questions of whether the heat capacity c_v is finite or infinite at the critical point, of whether the third $(\partial^3 p/\partial v^3)_T^{cr}$ and higher-order derivatives with respect to p and v have a zero or nonzero (but finite) value at the critical point, of whether the jump of the heat capacity c_v at the critical point is zero or nonzero, etc. The absence of unambiguous answers to these questions is due to the fact that the critical point is a very special point on the thermodynamic surface of state of substance. When an attempt is made to apply to the critical point ordinary relationships that are valid for all other points on the boundary curves and within the two-phase region, unremovable indeterminate forms appear in many of these relationships. The problems become more complicated due to the fact that the experimental studies of the thermodynamic properties of substance at the critical point involve great difficulties; the big errors in the measuring a number of quantities (due not so much to the imperfection of the measuring instruments as to the difficulties of a principle nature) make it impossible to give unambiguous answers to these questions on the basis of only experimental data.

6.7 Methods of calculating the entropy of substance

Entropy is one of the most important thermodynamic quantities essential in calculating various thermodynamic processes.

Any direct measurement of entropy is impossible. It can only be calculated with the aid of the differential equations of thermodynamics from the known values of other thermodynamic properties.

Just as in a number of other cases, in calculating various thermodynamic processes it is not the absolute value of entropy* that is of interest but rather the change in entropy in these processes. That is why the relative value of entropy is usually used, measured from some arbitrarily chosen reference point. As a rule, entropy is assumed to be equal to zero in the state which is assumed to be the zero reference state for measuring enthalpy or internal energy. So, for instance, in dealing with water and water vapour (steam), the entropy is assumed to be zero at the triple point ($p = 101.325$ kPa $= 0.006\,228$ kgf/cm^2, $T = 0.01$ °C).

If the value of the entropy is known in a state with parameters p_0 and T_0 (for instance, the zero value of entropy at the reference point selected), the entropy in a state with other parameters p and T can be determined from the following relationship:

$$s(p, T) = s_0(p_0, T_0) + \int_{p_0}^{p} \left(\frac{\partial s}{\partial p}\right)_T dp + \int_{T_0}^{T} \left(\frac{\partial s}{\partial T}\right)_p dT. \qquad (6.95)$$

* As will be shown in Chapter 15, it is much simpler to calculate the absolute value of entropy than the absolute values of i or u. The absolute value of s is calculated by purely thermodynamic methods.

The first integral in the right-hand side of Eq. (6.95) represents the change in entropy when the pressure changes from p_0 to p, and the second integral the change in temperature from T_0 to T.

Inasmuch as, according to Eqs. (4.22) and (4.45),

$$\left(\frac{\partial s}{\partial p}\right)_T = -\left(\frac{\partial v}{\partial T}\right)_p,$$

and

$$\left(\frac{\partial s}{\partial T}\right)_p = \frac{c_p}{T},$$

Fig. 6.32

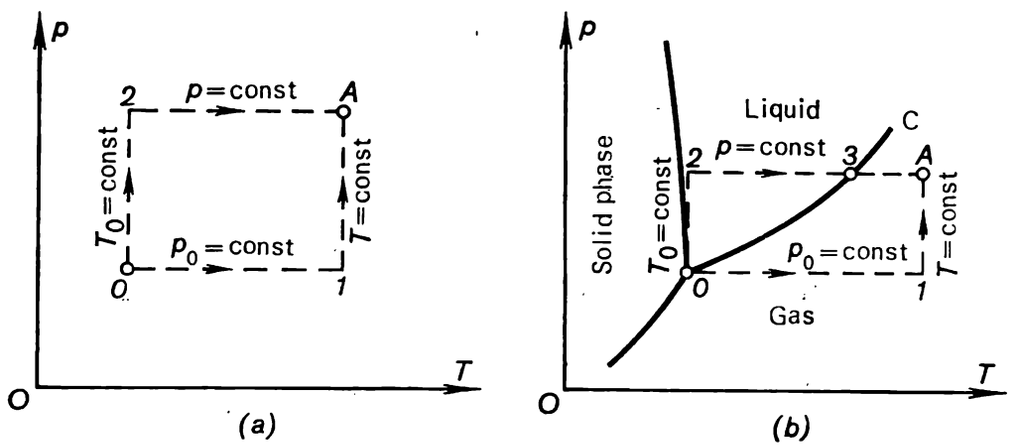

Eq. (6.95) takes the following form:

$$s - s_0 = -\int_{p_0}^{p} \left(\frac{\partial v}{\partial T}\right)_p dp + \int_{T_0}^{T} \frac{c_p}{T} dT \tag{6.96}$$

This relationship is used to measure the relative (i.e. measured from the value s_0) value of entropy based on the known derivative $(\partial v/\partial T)_p$ and heat capacity c_p. This relationship can be used to calculate entropy either directly from the data of p-v-T measurements and heat capacity c_p (applying numerical methods of calculation) or with the aid of Eq. (6.96).

It will be noted that the integrals present in the right-hand side of Eq. (6.96) can be calculated along two paths (Fig. 6.32*a*): from the reference point O (Fig. 6.32*a*) it is possible to reach the point at which the value of s is to be determined (point A) following the path O-1-A (i.e. first along the isobar p_0 = const from point O to the point at a temperature T, and then along the isotherm T = const from point A) or following the path O-2-A (first along the isotherm T_0 = const from point O to the point at pressure p, and then along the isobar p = const to point A). In the first of the two cases, the integral along p_0 = const is calculated first, and then the integral at T = const; and in the second case, first the integral along T_0 = const, and then the integral at p = const. Inasmuch as entropy is a function of state, the result will be the same in both cases.

Equation (6.96) can be used directly to calculate the value of $s - s_0$ only when both states for which the difference in entropy is calculated

(points O and A in Fig. 6.32a) are in one and the same phase. But if these points pertain to different phases, the equation should be modified in a certain way. Consider the form of the equation for the case when, for instance, point O (parameters p_0 and T_0) corresponds to the state of liquid at the triple point, and point A (parameters p and T) is located in the vapour phase region (Fig. 6.32b).

It will be recalled in this connection that if we pass through the saturation line, the entropy of substance changes by a value $s'' - s'$ determined from the relationship

$$s'' - s' = \frac{r}{T},$$

where r is the latent heat of vapourization at a temperature T, s'' the entropy of dry saturated vapour, and s' the entropy of saturated liquid.

Taking this fact into account, we find that when the calculation is based on the path O-1-A (Fig. 6.32b),

$$s - s_0 = \frac{r_0}{T_0} + \int_{T_0}^{T} \frac{c_p^{\mathrm{v}}}{T}\, dT - \int_{p_0}^{p} \left(\frac{\partial v}{\partial T}\right)_p^{\mathrm{v}} dp, \tag{6.97}$$

and when calculating along O-2-3-A,

$$s - s_0 = -\int_{p_0}^{p} \left(\frac{\partial v}{\partial T}\right)_p^{\mathrm{l}} dp + \int_{T_0}^{T_{\mathrm{b}}} \frac{c_p^{\mathrm{l}}}{T}\, dT + \frac{r}{T_{\mathrm{b}}} + \int_{T_{\mathrm{b}}}^{T} \frac{c_p^{\mathrm{v}}}{T}\, dT, \tag{6.98}$$

where r_0 is the latent heat of vapourization at the triple point, T_{b} the boiling point at a pressure p, and r the latent heat of vapourization at temperature T_{b}.

These relationships are not principally new ones, representing concrete forms of the general Eq. (6.96).

The described method of calculating entropy (along an isobar and isotherm) is not the only possible. The value of $s - s_0$ between the same states of a substance can, evidently, be calculated with the aid of the following relationships:

$$s(v, T) - s_0(v_0, T_0) = \int_{v_0}^{v} \left(\frac{\partial s}{\partial v}\right)_T dv + \int_{T_0}^{T} \left(\frac{\partial s}{\partial T}\right)_v dT \tag{6.99}$$

or, for instance,

$$s(i, p) - s_0(i_0, p_0) = \int_{i_0}^{i} \left(\frac{\partial s}{\partial i}\right)_p di + \int_{p_0}^{p} \left(\frac{\partial s}{\partial p}\right)_i dp. \tag{6.100}$$

Such calculations of the changes of the functions of state between points 1 and 2 can in principle be made following an infinite number of possible paths between the two states, with the selection of a particular path being determined by considerations of convenience and visual presentation of the method of calculation. Inasmuch as

$$\left(\frac{\partial s}{\partial T}\right)_v = \frac{c_v}{T}, \quad \left(\frac{\partial s}{\partial v}\right)_T = \left(\frac{\partial p}{\partial T}\right)_v, \quad \left(\frac{\partial s}{\partial i}\right)_p = \frac{1}{T},$$

$$\left(\frac{\partial s}{\partial p}\right)_i = -\frac{v}{T},$$

the relationships (6.99) and (6.100) can be written as follows:

$$s-s_0=\int_{v_0}^{v}\left(\frac{\partial p}{\partial T}\right)_v dv+\int_{T_0}^{T}\frac{c_v}{T}dT \tag{6.101}$$

and

$$s-s_0=\int_{i_0}^{i}\frac{di}{T}-\int_{p_0}^{p}\frac{v}{T}dp. \tag{6.102}$$

To use relationship (6.101) for calculations we must have data on the p-, v-, T-dependencies and heat capacity c_v, and to use the second relationship, (6.102), data on the p-, v-, T-dependencies and enthalpy.

Consider now the problem involving calculation of the entropy of an ideal gas. Since for an ideal gas

$$pv = RT,$$

it follows that

$$\left(\frac{\partial v}{\partial T}\right)_p=\frac{R}{p} \quad \text{and} \quad \left(\frac{\partial p}{\partial T}\right)_v=\frac{R}{v},$$

and heat capacity depends only on temperature, Eqs. (6.96) and (6.101) reduce to respectively:

$$s-s_0=\int_{T_0}^{T}\frac{c_{p_0}}{T}dT-R\ln\frac{p}{p_0} \tag{6.103}$$

and

$$s-s_0=\int_{T_0}^{T}\frac{c_{v\infty}}{T}dT+R\ln\frac{v}{v_0}. \tag{6.104}$$

For not very large values of $(T-T_0)$ Eqs. (6.103) and (6.104) can be represented in the following form:

$$s-s_0=c_{p_0}\ln\frac{T}{T_0}-R\ln\frac{p}{p_0} \tag{6.105}$$

and

$$s-s_0=c_{v\infty}\ln\frac{T}{T_0}+R\ln\frac{v}{v_0}. \tag{6.106}$$

The first term in the right-hand side of these equations represents the change of entropy with temperature, and the second term the change of entropy with pressure (or with volume).

Since for many substances (water, for instance) the pressure at the triple point is so low that in the state corresponding to the triple point dry saturated vapour can be considered as an ideal gas, when used to calculate $(s-s_0)$, Eq. (6.91) can be written in the following form*:

$$s-s_0=\frac{r_0}{T_0}+\int_{T_0}^{T}\frac{c_{p_0}}{T}dT-\int_{p_0}^{p}\left(\frac{\partial v}{\partial T}\right)_p^g dp, \tag{6.107}$$

* Since in the general case a gas cannot be considered as ideal at a pressure p, the second integral in this equation cannot be replaced with the quantity $-R\ln(p/p_0)$, as it was done in equation (6.103) for an ideal gas.

and for small differences in temperature we have:

$$s - s_0 = \frac{r_0}{T_0} + c_{p_0} \ln \frac{T}{T_0} - \int_{p_0}^{p} \left(\frac{\partial v}{\partial T} \right)_p^g dp. \tag{6.108}$$

To use Eq. (6.108) for entropy calculations for gases, in addition to the values of r_0 and c_{p_0}, only data on the p-, v-, T-dependencies of the gas phase should be available. Relationships of this kind are usually used to calculate the entropy of gases.

Fig. 6.33

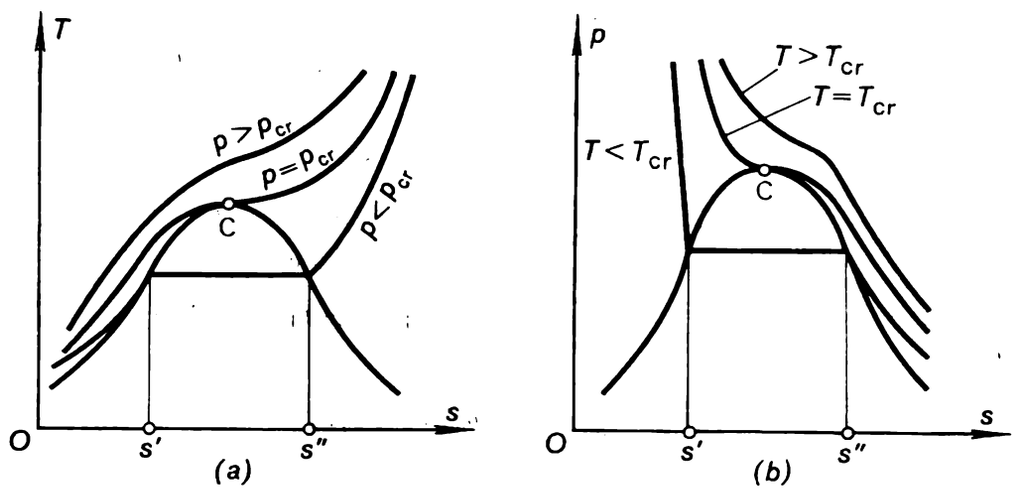

Knowing the values of s, we can construct diagrams of state of substances in which the value of entropy is plotted on one of the coordinate axes. These diagrams of state (sometimes referred to as entropy diagrams) find wide application in calculating thermodynamic processes.

The T-s and p-s diagrams shown in Fig. 6.33 are plotted for the regions in which substance is in a liquid and gas state, including the two-phase and supercritical regions.

The shape of an isobar on the T-s diagram (Fig. 6.33a) becomes clear after analyzing the i-T diagram (see Fig. 6.18). In fact, since

$$\left(\frac{\partial i}{\partial T} \right)_p = c_p = T \left(\frac{\partial s}{\partial T} \right)_p, \tag{6.109}$$

the slopes of the isobars on the i-T and T-s diagrams are related unambiguously.

With increasing temperature (at a constant pressure) the entropy of substance increases. Therefore, the relation

$$\left(\frac{\partial T}{\partial s} \right)_p \geqslant 0 \tag{6.110}$$

is always true [the sign of equality corresponds to the critical point and to the isobars in the two-phase region, where $c_p = T\,(\partial s/\partial T)_p = \infty$].

Since

$$\left(\frac{\partial T}{\partial s} \right)_p^{cr} = 0,$$

it can be easily shown that

$$\left(\frac{\partial^2 T}{\partial s^2}\right)_p^{cr} = 0, \tag{6.111}$$

i.e. the critical isobar passing on the T-s diagram through the critical point with a horizontal tangent has an inflection at that point. In the T-s diagram the subcritical isobars are horizontal lines in the two-phase region (since in this region the isobars coincide with the isotherms), and the supercritical isobars have an inflection. In accordance with Eq. (5.106), on the T-s diagram the area below the horizontal section of the subcritical isobar,

Fig. 6.34

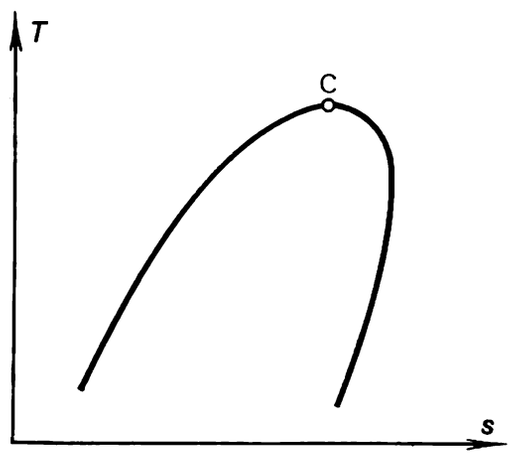

equal to $T(s'' - s')$, represents the latent heat of vapourization r at a given pressure.

The nature, or shape, of isotherms on the p-s diagram (Fig. 6.33b) is also clear from the analysis of the v-T diagram (Fig. 6.12), since in accordance with Maxwell's (4.22)

$$\left(\frac{\partial p}{\partial s}\right)_T = -\left(\frac{\partial T}{\partial v}\right)_p.$$

On the p-s diagram, in accordance with Eqs. (6.87) and (4.22), for the critical point

$$\left(\frac{\partial p}{\partial s}\right)_T^{cr} = 0; \tag{6.112}$$

it can also be easily shown that

$$\left(\frac{\partial^2 p}{\partial s^2}\right)_T^{cr} = 0. \tag{6.113}$$

A characteristic property of entropy diagrams should be noted: while on the p-v and v-T diagrams the left boundary curve is considerably steeper than the right one (since along the boundary curve the magnitude of v' changes at a considerably smaller rate than v'') on the T-s and p-s diagrams for many substances (including water) the left and right boundary curves are almost symmetrical.

At the same time it must be noted that for some substances (for a number of hydrocarbons) the upper boundary curve slopes in the opposite direction on the T-s diagram (Fig. 6.34).

In analyzing processes proceeding in two-phase systems it proves sometimes helpful to make use of the notion of the so-called *heat capacity along the boundary curve* c_s determined by equation

$$c_s = T \frac{ds_s}{dT}, \tag{6.114}$$

where ds_s/dT is the total derivative of entropy with respect to temperature on the boundary curve.

From the viewpoint of physical meaning the heat capacity c_s is the quantity of heat which should be added to a substance in a state on the boundary curve (or removed from it) to raise its temperature by one degree, so that the state of the substance considered would remain on the boundary curve upon heating. As can be seen from the T-s diagram, shown in Fig. 6.33*a*, on the lower boundary curve (c_s') the heat capacity c_s is always positive ($ds' > 0$ when $dT > 0$), and the heat capacity c_s on the upper boundary curve (c_s'') is negative ($ds'' < 0$ when $dT > 0$)*.

6.8 Thermodynamic diagrams of state for substances

Together with the tables of thermodynamic properties, the diagrams of state prove to be a convenient tool in calculating various thermodynamic processes.**

In the preceding sections the main diagrams of state were already considered, stressing the characteristic properties of each diagram of state.

It will be noted, however, that with the exception of the p-T diagram only the regions of the liquid and gas state of substances were investigated, since it is the diagrams of state for these regions that are usually essential for engineering calculations. In order to give an idea of how the regions of other states of aggregation of substances (the solid phase, the fusion line, the sublimation line, the triple point) are represented in these diagrams, the boundary curves separating the two-phase regions of all three states of aggregation of substance on the p-v, T-v***, T-s and p-s diagrams are shown schematically in Fig. 6.35, where

Cc and *Cd* are the left and right boundary curves for the two-phase liquid-vapour region (C is the critical point);

ba and *de* are the left and right boundary curves for the two-phase solid-vapour region (sublimation line);

mb and *nc* are the left and right boundary curves for the two-phase solid-liquid region (fusion (or melting) line);

bcd is the state corresponding to the triple point (in each of the diagrams the triple point happens to be developed into a line).

---

* For substances whose T-s diagram has the form as shown in Fig. 6.34 the quantity c_s'' changes its sign.

** Due to the limitations imposed by the size of the diagram, the numerical values of the quantities which can be obtained from the diagram are usually of a lesser accuracy than the values taken from tables.

*** The T-v diagram is an inverted v-T diagram; the reason for plotting it in this form is to emphasize the certain similarity between the T-v and T-s, and also between the p-v and p-s, diagrams.

Arranged to the left of the line *mba* is the solid-phase region, the liquid-phase region is confined between the lines *nc* and C*c*, and the region of the vapour (gas) state of substance is located to the right of the C*de* line.

It will be emphasized that the plane diagrams are projections of the three-dimensional thermodynamic surface of state on the three coordinate planes. In illustration, shown in Fig. 6.36 is the thermodynamic surface of state plotted in *p-v-T* coordinates*. It can be seen from Fig. 6.36 that the

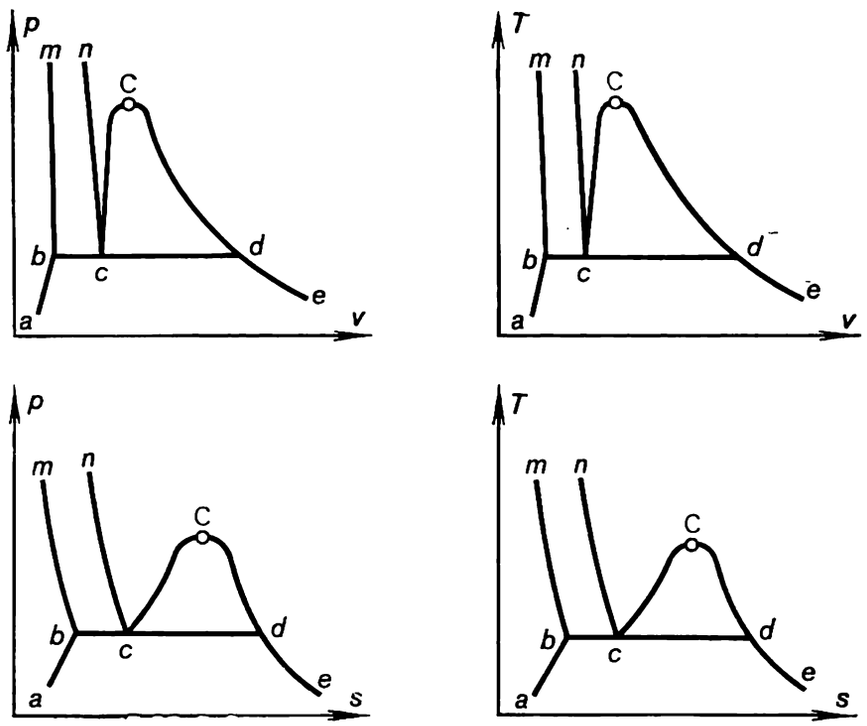

Fig. 6.35

projections of this surface on the *p-T*, *p-v* and *T-v* planes are indeed as shown in Figs. 5.2 and 6.35. In the three-dimensional *p-v-T* diagram, the thermodynamic surface of state is not the only possible.

Consider now one more diagram of state, finding wide application in heat engineering calculations, and most of all in designing thermo-power plants and refrigerating installations, the *i-s* diagram. This diagram was first suggested in 1904 by the German engineer R. Mollier.

The *i-s* diagram is shown in Fig. 6.37. Plotted in the diagram are only the regions of the gas (vapour) and liquid states of substance, which, as was already noted, are of the greatest interest for heat engineering calculations. Consider the basic properties of this diagram.

As can be seen from Fig. 6.37, on the *i-s* diagram the critical point occupies a somewhat unusual position on the boundary curve: it is located at a considerable distance to the left of the maximum point of the boundary curve. This can be explained by the following way. It follows from Eq. (4.29),

$$di = T\,ds + v\,dp,$$

* The specific volumes are plotted on the *v*-axis to a logarithmic scale.

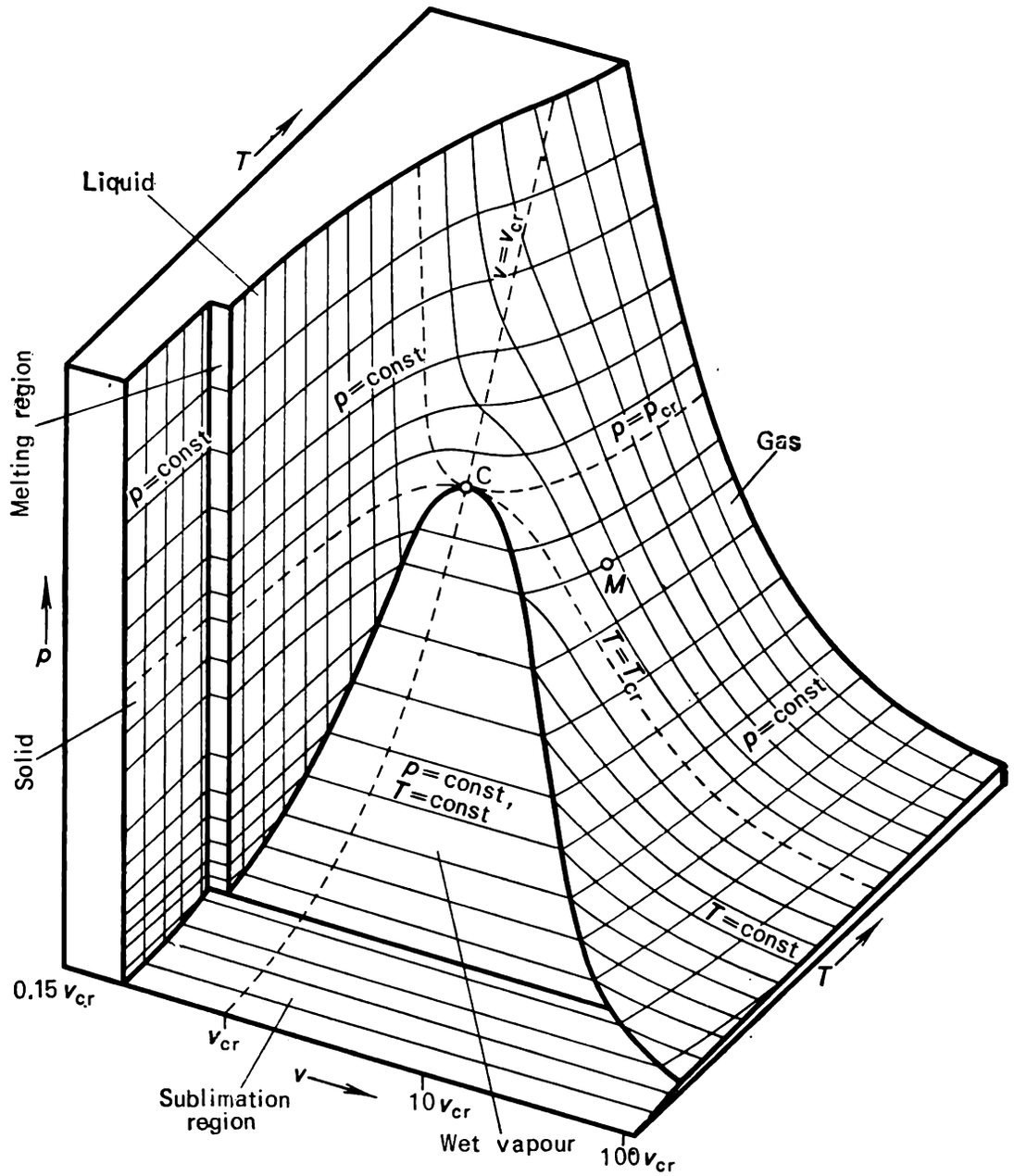

Fig. 6.36

that the total derivative of the enthalpy with respect to the entropy along the boundary curve is

$$\frac{di}{ds} = T + v\frac{dp}{ds}. \tag{6.115}$$

Since, as can be seen from the p-s diagram, at the critical point

$$\left(\frac{dp}{ds}\right)_{cr} = 0, \tag{6.116}$$

it follows from Eq. (6.115) that

$$\left(\frac{di}{ds}\right)_{cr} = T. \tag{6.117}$$

Consequently, the slope of the tangent and of the boundary curve is equal to T_{cr} at the critical point.

It will also be noted that since, in accordance with Eq. (4.42),

$$\left(\frac{di}{ds}\right)_p = T,$$

the slope of the isobars is always positive on the i-s diagram, i.e. enthalpy always increases with rising entropy on the isobar.

Fig. 6.37

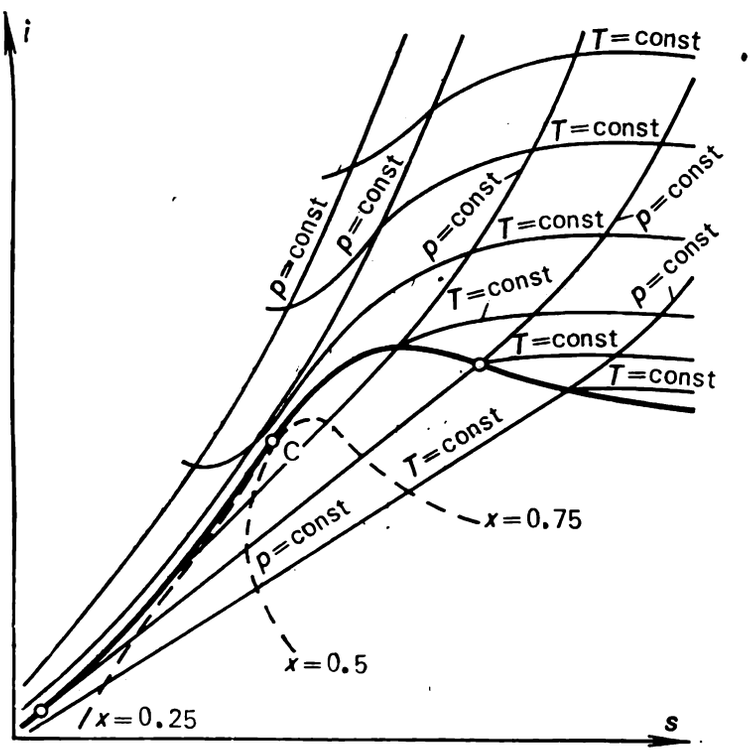

It follows from this equation that

$$\left(\frac{\partial^2 i}{\partial s^2}\right)_p = \left(\frac{\partial T}{\partial s}\right)_p, \tag{6.118}$$

whence, with account taken of Eq. (4.45), we obtain:

$$\left(\frac{\partial^2 i}{\partial s^2}\right)_p = \frac{T}{c_p}. \tag{6.119}$$

In accordance with Eq. (4.42), in the saturation region the isobars are straight lines whose slopes are equal to the absolute temperature. It is clear from this relationship that on the i-s diagram the curvature of an isobar is always positive and, consequently, the isobars (including the supercritical) have no inflection point.

As to the two-phase region, where the isobar coincides with the isotherm, in accordance with Eq. (4.42) the slope of the isobar in the two-phase region is constant along the curve (since as T = const on these isobars). Hence, inside the two-phase region the isobars are represented by straight lines on the i-s diagram. It follows from Eq. (4.42) that the higher the saturation pressure (and, consequently, the higher the temperature), the steeper the isobar runs in the two-phase region of the i-s diagram. This explains the

fan-shape arrangement of the isobars in the two-phase region, as illustrated in Fig. 6.37.

Since, in accordance with Eq. (4.42), the slope of an isobar in the *i-s* diagram is equal to temperature, it is clear that on this diagram the isobars cross the boundary curve without an inflection (discontinuity). On a given isobar, the latent heat of vapourization,

$$r = i'' - i',$$

is equal to the difference between the ordinates of the points of intersection of the isobar with the right and left boundary curves.

As regards the isotherms, since

$$\left(\frac{\partial i}{\partial s}\right)_T = \left(\frac{\partial i}{\partial p}\right)_T \left(\frac{\partial p}{\partial s}\right)_T, \tag{6.120}$$

which, with account taken of Eq. (4.31) and (4.22), gives us

$$\left(\frac{\partial i}{\partial s}\right)_T = T - v\left(\frac{\partial T}{\partial v}\right)_p, \tag{6.121}$$

and since the quantity $(\partial T/\partial v)_p$, as has been shown in Sec. 6.5, changes with a jump, we find that the isotherms cross the boundary curves on the *i-s* diagram with an inflection, and as the distance from the upper boundary curve increases, they approach asymptotically the horizontal line i = const, for in the ideal gas region enthalpy is determined by temperature unambiguously.

On the *i-s* diagram the lines of constant dryness (x = const) are always plotted in the two-phase region, and sometimes isochors, too.

6.9 Thermodynamic properties of substance in a metastable state

As was already repeatedly mentioned, it is known from practice that at a given pressure a change of phase takes place at a strictly definite temperature. The pressures and temperatures at the phase change points are related unambiguously by the Clausius-Clapeyron equation (5.107). In addition, the following phenomenon has been revealed by experiment. If a pure, containing practically no dissolved gases, liquid is heated slowly in a vessel with smooth walls, and the heating is done with sufficient accuracy (protecting the vessel from jerks, keeping foreign particles and gas bubbles from getting into the vessel from the outside, etc.), it proves possible to heat the liquid to a temperature exceeding considerably the boiling point at the given pressure (the liquid is said to be *superheated*). Experiments are known, for instance, in which water was superheated at atmospheric pressure by tens of degrees. At such temperature the water should have turned into superheated steam, but nothing of the kind took place, water preserved all the properties inherent to a liquid. However, if the system was subjected to some disturbance (if the vessel was shaked, for instance), the water began to boil instantaneously in the vessel and convert into superheated steam. It is clear, in this way, that, in accordance with the classification adopted in Sec. 5.2, the state of a superheated liquid is a metastable state.

In addition to the considered case of superheating a liquid, there exist other metastable states of substance, supercooled vapour (when vapour temperature happens to be below the saturation temperature at the given pressure) and supercooled liquid (when the temperature of liquid happens to be below the solidification point at the given pressure).

It ought to be emphasized that one and the same metastable state of substance can be realized by various methods. So, vapour can be supercooled or subcooled not only by gradual cooling at a constant external pressure (Fig. 6.38*a*, curve *II-b*), but also by compressing the vapour slowly under isothermal conditions (Fig. 6.38*b*, curve *II-n*) and also by subjecting the

Fig. 6.38

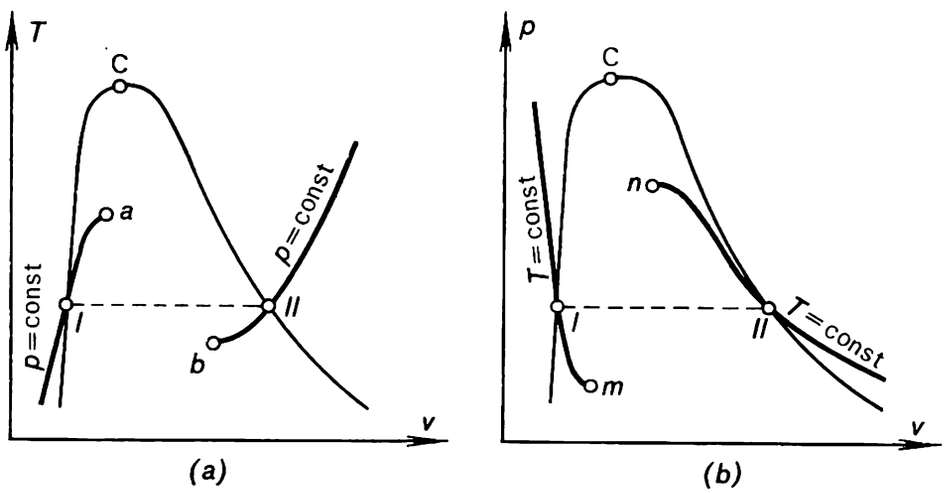

vapour to isentropic expansion. Similarly, superheated liquid can be produced not only by gradual heating at p = const (curve *I-a*), but also by reducing the pressure of the liquid at T = const (curve *I-m*) and by means of isentropic expansion of the liquid (sudden removal of pressure).

Metastable states of substance have to be dealt with quite often. Thus, the water in a cloud may be preserved in a liquid state at a temperature below 0 °C; various types of glass are nothing but subcooled liquids that failed to pass into a crystalline state; in various processes of vapour flow through nozzles the vapours involved happen to be subcooled due to isentropic expansion, etc.

Metastable states of substance are made use of successfully in the most important instruments, or tools, of experimental nuclear physics, for instance, in the Wilson cloud chamber.

In the Wilson cloud chamber, filled with a mixture of air and water vapour, subcooled water vapour is obtained by means of an abrupt removal of the pressure applied to this mixture (isentropic expansion). Moving through the gas mixture (air and water vapour) filling the chamber, a charged elementary particle (for instance, an alpha-particle or electron) collides with gas molecules and ionizes them. This process results in that a chain of ions forms along the track of the elementary particle, the ions serving as centres of condensation for the subcooled vapour filling the chamber. As a result of vapour condensation, finest droplets of water form on these ions and a photograph of the droplets of water gives the track of the elementary particle. The bubble chamber is based on a similar principle, but here not subcooled

vapour but superheated liquid is used. In the bubble chamber a metastable state of the liquid is attained, just as in the Wilson cloud chamber, by a sudden removal of pressure. A chain of vapour bubbles forms along the track of the elementary particle; the ions forming as a high-energy particle passes through the liquid serve as formation centres for the steady phase (vapour).

Shown in Fig. 6.38*a* and *b* is the nature of isobars (on a T-v diagram) and isotherms (on a p-v diagram) of vapour when it is subcooled or of liquid when it is superheated.* The ordinary behaviour of an isobar-isotherm inside the two-phase region is shown on these diagrams by dotted lines. As can be seen from these diagrams, in the metastable state the isobars (or isotherms) become gradually flatter when the distance from the boundary curve increases, until their tangents become horizontal. It is clear that this metastable state corresponds to $(\partial T/\partial v)_p = 0$ or $(\partial p/\partial v)_T = 0$. The points on the metastable isobars and isotherms at which these derivatives turn zero are the limit points of the metastable states indicated. As it is shown in statistical physics, in cases when the state of substance is characterized by the equality $(\partial p/\partial v)_T = 0$, local spontaneous condensations or rarefactions of substance (the so-called density fluctuations), which may serve as centres of steady-phase formation, become infinitely large. If this is so, the metastable state of substance can no more exist, and the substance passes into a stable state without fail (with a 100% certainty). Consequently, the existence of superheated liquid in a state to the right of point *a* and the existence of superheated vapour in a state to the left of point *b* (see the T-v diagram in Fig. 6.38*a*) is impossible.

On the diagram of state, the line connecting the points on the isobars (or isotherms) in the metastable state at which the derivative $(\partial p/\partial v)_T$ turns into zero (i.e. the points limiting the existence of a metastable state) is referred to as the *spinodal*. The boundary curve separating the two-phase region of state from the single-phase region is sometimes called the *binodal*, respectively. On the T-v, p-v and p-T diagrams shown in Fig. 6.39 the binodal is represented by the solid line, and the spinodal by the dotted line. It is clear that the spinodal can also be identified as the boundary of the region of states inside of which the existence of substance in a single-state phase is impossible. In fact, inside the region *cCd* (Fig. 6.39*a* and *b*) the existence of a metastable single-phase state of substance is impossible. On the other hand, the binodal can be defined as the boundary of the region of state outside of which the existence of substance in a two-phase state is impossible. In Fig. 6.39 the shaded areas correspond to the region in which the existence of metastable states is possible.

The binodal and the spinodal merge at the critical point. The two branches of the spinodal, corresponding to superheated liquid and subcooled vapour, approach the critical point with a common tangent. The equation of the spinodal is derived by solving together the equation of state $p = f(v, T)$ and the equation $\left(\frac{\partial p}{\partial v}\right)_T = 0$. It is known from mathematics that the solution of such equation is the equation of the envelope of a family of one-parameter curves plotted in p-T coordinates and whose parameter is v, i.e. on a p-T diagram the spinodal is the envelope of the isochors that are continued

* As can be seen from Fig. 6.38, the nature of isotherms of a real substance in the region of metastable states is qualitatively similar to the nature of isotherms of a Van der Waals gas inside the two-phase region.

into the region of metastable states. This important property of the spinodal is made use of when this curve is plotted on the basis of experimental data on pressure, volume and temperature, and also when working out empirical equations of state.

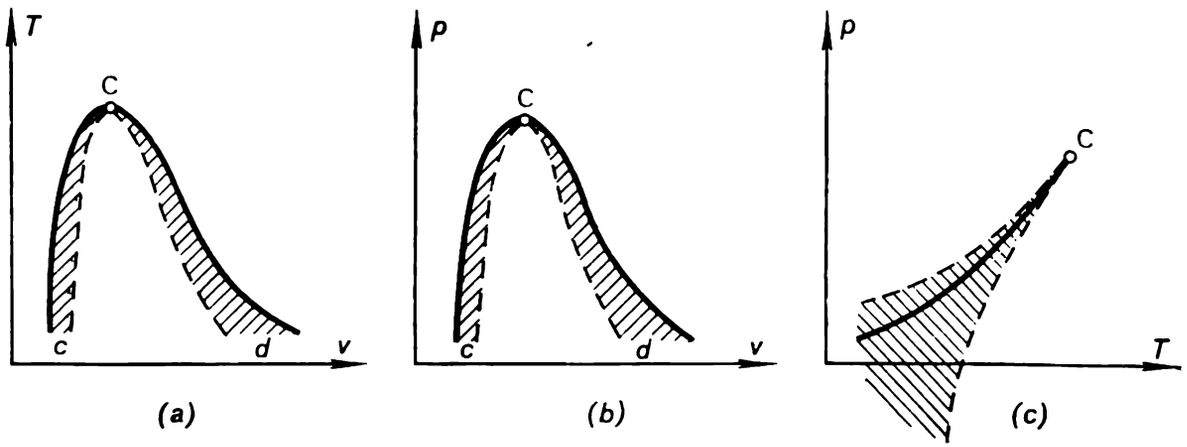

Fig. 6.39

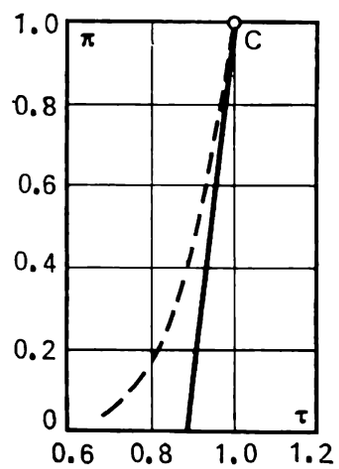

Fig. 6.40

It is common practice to characterize a metastable state by the following criteria: for subcooled vapour, by the *degree of vapour supersaturation*, which is the ratio of the density of vapour in a given state to the density of saturated vapour at the same temperature; and for superheated liquid a metastable state is characterized by the amount of *excess heat*, which is the difference between the temperatures of a liquid at a given state and of the boiling point of the liquid at the same pressure.

The degrees of vapour supersaturation or the amounts of excess heat, which can be attained under these or other conditions, depend on a variety of reasons, such as the degree of roughness of the inner surfaces of the vessel in which a metastable state is being realized, the degree of substance contamination, the presence of external disturbances, etc. Very thoroughly conducted experiments make it possible to penetrate deeply the region of metastable states and to approach the spinodal. In Fig. 6.40 the position of the left branch of the spinodal (the boundary of maximum possible super-

heating of liquid) is plotted in the reduced coordinates π, τ based on the results of experiments conducted with a number of hydrocarbons (*n*-pentane, *n*-hexane, *n*-heptane, ethyl ether). On this π-τ diagram the saturation line is represented by the dotted line. As can be seen from this diagram, at pressures far from critical liquid can be superheated considerably. So, for instance, for *n*-pentane at atmospheric pressure (the saturation temperature $t_s = 36°C$), the maximum excess heat temperature t_{max} is equal to 144°C, and, consequently, the superheating of liquid *n*-pentane attainable, $\Delta t = t_{max} - t_s$, is equal to 108°C. The value of Δt diminishes, naturally, in the direction of the critical point.

7

Basic thermodynamic processes

7.1 The isochoric process

Let us consider the basic thermodynamic processes, look into their regularities and set up the equations relating the parameters of state of substance in these processes.

The isochors of a real gas are plotted on the p-T diagram shown in Fig. 7.1, which also shows the isochors on the p-v, T-v and T-s diagrams. Consider an isochoric process realized from state *1*, in which the working medium is under a pressure p_1, temperature T_1 and has a volume V, to state *2*. To determine the parameters, or properties, of state *2*, it is sufficient to know one of the parameters at point *2* (for instance, pressure p_2 or temperature T_2). Inasmuch as the state of the substance undergoing the process changes along an isochor, one more parameter of state is given, and that is volume V. Knowing V and T_2 (or V and p_2 or V and s_2, etc.), all other parameters characterizing the state of the working medium at point *2* can be determined with the aid of the diagram of state, the equation of state or tables of thermodynamic properties of the given substance.

The parameters of state of an ideal gas on the isochor are related by equation (1.16)

$$\frac{p_2}{p_1}=\frac{T_2}{T_1}.$$

An increase in the temperature of an ideal gas kept in a vessel of constant volume always results in an increase in pressure, with the pressure rising at a rate which is greater the smaller the value of v on the given isochor (this

follows from the hyperbolic nature of the isotherms of an ideal gas on the p-v diagram).

Heating of real gases and liquids also results in an increase in pressure, with the pressure of the liquid rising at a rate considerably greater than the rate of increase in gas pressure (the p-T diagram in Fig. 7.1).

It is of interest to note the curious property inherent in isochors of water at low temperatures. As was already mentioned above, at a temperature of

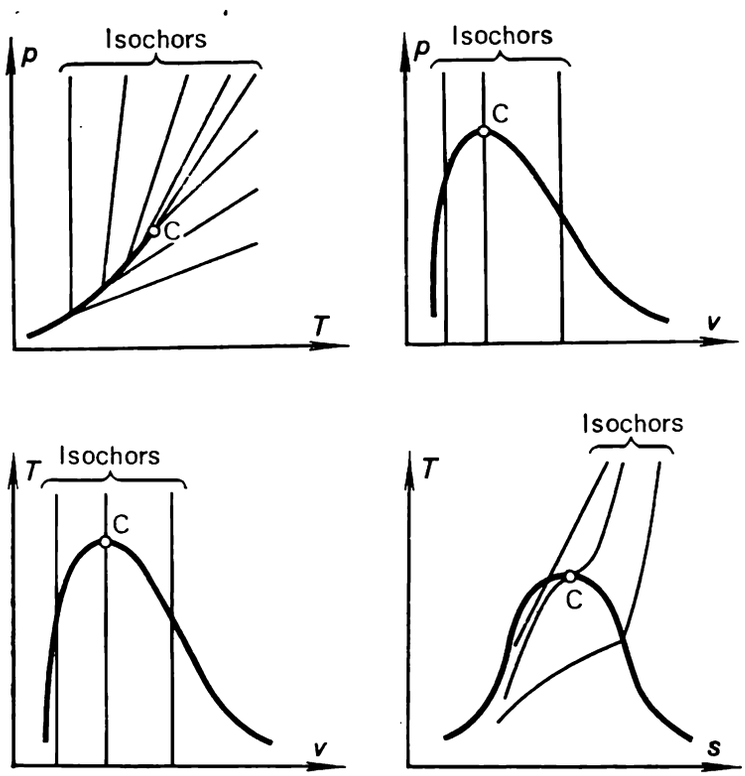

Fig. 7.1

3.98 °C the density of water is maximum at atmospheric pressure. A detailed investigation shows that in this temperature interval the isochors plotted for water have the form illustrated in Fig. 7.2; the isochors for $v \leqslant 1.000\,000$ ml/g pass through a minimum near the point at which the temperature is 3.98 °C (denote this point of minimum by A), with the isochor for $v = 1.000\,000$ ml/g touching the saturation line. The slope of the isochors to the left of the minima points is negative, i.e. $(\partial p/\partial T)_v < 0$. Isochors plotted for water for $v > 1.000\,000$ ml/g (up to $v = 1.000\,132$ ml/g, corresponding to the triple point) are characterized by the fact that they cross the saturation line twice, with a positive and a negative slope. Thus, when water undergoes an isochoric process at $T < T_A$, heating of the system will lead to a drop in system pressure. With rising temperature, the system corresponding to isochors for $1.000\,000 < v < 1.000\,132$ ml/g will pass from a single-phase state into a two-phase state, and then again into a single-phase state.

We shall note some characteristic properties of an isochoric process realized in a two-phase medium. Consider heating a vessel of constant volume V, containing a liquid (water, for instance) in equilibrium with its saturated vapour. Denote by G the mass of water and its vapour confined in the vessel.

The specific volume v of the two-phase mixture filling the vessel will then be V/G. Consider two cases: first, an amount of water is poured into the vessel such that the specific volume of the two-phase mixture v_1 is smaller than the critical volume v_{cr}, and second, $v_2 > v_{cr}$ (Fig. 7.3). Let us determine how the state of the steam-and-water mixture in each of these vessels will change with isochoric heating from the same temperature T. The investigation can be facilitated by plotting the state of the mixture in each of the vessels on a T-v diagram, in which point *1* corresponds to the state of the steam-and-water mixture in the first vessel prior to heating (specific volume v_1, temperature T), and point *2* to the state of the mixture in the second vessel before

Fig. 7.2

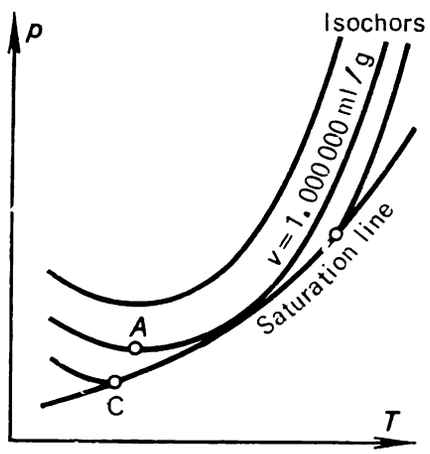

Fig. 7.3

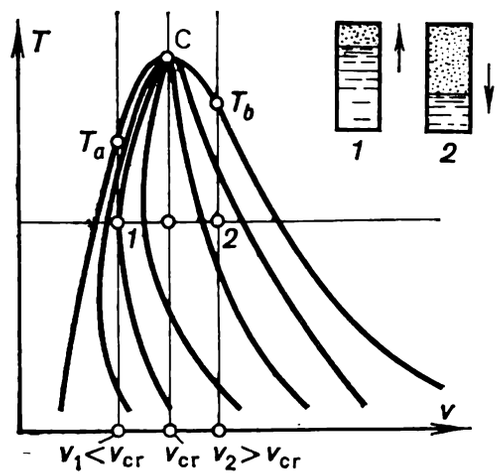

heating (v_2 and T). The dryness fraction of the mixture in each vessel, x, is determined from the relationship

$$x = \frac{v^{\text{t.ph.}} - v'}{v'' - v'},$$

where v'' and v' are the specific volumes of dry saturated steam and water, respectively, on the saturation line at a temperature T, and $v^{\text{t.ph.}}$ is the specific volume of the two-phase mixture in a vessel (in this example, v_1 or v_2).

Isochoric heating will be accompanied by a change in the ratio between the amounts of water and steam in the vessel, i.e. by a change in the dryness fraction of the two-phase mixture. As can be seen from Fig. 7.3, at v_1 = const first $dx > 0$, then $dx < 0$; at $v > v_{cr}$, dx is always greater than zero, $dx > 0$. Upon reaching a certain temperature T_a, the entire vessel is filled with water, and with further heating the isochor v_1 = const passes into the liquid region (T_a is the temperature at which the specific volume of water on the saturation line, v', equals v_1). Another picture is observed when the temperature in the second vessel rises: on the isochor v_2 = const, heating is accompanied by an increase in the dryness fraction x of the mixture, water evaporates in the vessel and the level of water decreases. When temperature T_b is reached (the temperature at which v'' equals v_2), the entire vessel is filled with dry saturated steam and further heating takes place in the superheated steam region. Finally, if the vessel is filled with an amount of liquid corresponding to the specific volume v_{cr} and heated to the critical temperature T_{cr}, the meniscus separating the liquid and vapour disappears at approximately midheight of the vessel.

The work done by a system undergoing isochoric expansion is equal to zero. From the relationship

$$l_{12} = \int_1^2 p\,dv$$

it is clear that for an isochoric process, when v = const,

$$l_{12} = 0. \tag{7.1}$$

The amount of heat added to a system undergoing isochoric heating is determined from the mathematical statement of the first law of thermodynamics:

$$dq = du + p\,dv.$$

Since for an isochoric process $dv = 0$,

$$dq = du$$

and, consequently, the amount of heat added to a system undergoing heating from state *1* (the parameters of this state are v and T_1) to state *2* (with parameters v and T_2) will be equal to the difference between the internal energies u_2 and u_1:

$$q_{21} = u_2(v, T_2) - u_1(v, T_1). \tag{7.2}$$

The difference in the internal energies of the two states will be determined on the isochor in the following way. From the obvious relationship

$$u_2(v, T_2) - u_1(v, T_1) = \int_{T_1}^{T_2} \left(\frac{\partial u}{\partial T}\right)_v dT, \tag{7.3}$$

taking into account Eq. (2.31), we obtain:

$$u_2(v, T_2) - u_1(v, T_1) = \int_{T_1}^{T_2} c_v\,dT. \tag{7.4}$$

Thus, the relationship (7.2), expressing the amount of heat involved in an isochoric process, can be presented in the following form:

$$q_{21} = \int_{T_1}^{T_2} c_v\,dT. \tag{7.5}$$

If we apply the concept of the average heat capacity c_v^{av}, relationship (7.5) can be written in the following form:

$$q_{21} = c_v^{av}(T_2 - T_1). \tag{7.6}$$

Finally, when heat capacity is constant in the temperature interval considered, we have:

$$q_{21} = c_v(T_2 - T_1). \tag{7.7}$$

The change in entropy in an isochoric process is determined in the following way. From the relationship

$$s_2(v, T_2) - s_1(v, T_1) = \int_{T_1}^{T_2} \left(\frac{\partial s}{\partial T}\right)_v dT. \tag{7.8}$$

taking into account Eq. (4.47), we get:

$$s_2(v, T_2) - s_1(v, T_1) = \int_{T_1}^{T_2} \frac{c_v}{T} dT. \tag{7.9}$$

With data on the heat capacity c_v available, this equation can be easily used to calculate the change in entropy in an isochoric process.

If heat capacity is constant within the temperature interval considered, and, consequently, c_v can be taken out of the integral, we obtain from Eq. (7.9):

$$s_2(v, T_2) - s_1(v, T_1) = c_v \ln \frac{T_2}{T_1}, \tag{7.10}$$

i.e. the dependence of entropy on temperature on the isochor is logarithmic.

7.2 The isobaric process

The isobars (constant-pressure lines) of a real gas are plotted on the T-v, T-s, p-v and p-T diagrams shown in Fig. 7.4.

If a system undergoes an isobaric process from state *1* to state *2*, and if the properties (parameters) of the system in state *1* are known, to determine system parameters in state *2* it is sufficient to know one of the parameters of the system at point *2* (the second parameter, pressure, is known). Other system parameters of state at point *2* can be determined with the aid of the diagrams of state, equation of state or from tables of thermodynamic properties of substances, just as described above for the isochoric process.

The parameters of state of an ideal gas are related on the isobar by equation (1.15):

$$\frac{v_2}{v_1} = \frac{T_2}{T_1}.$$

It follows from the above that the higher the temperature of a gas, the greater its specific volume (i.e. the smaller the density of the gas). On the isobar, the quantity v increases with rising temperature at a rate which is greater, the smaller the pressure (this can be ascertained by considering the isotherms on the p-v diagram).

When heated, real gases, liquids and solids also undergo thermal expansion on the isobar (with the exception of some anomal regions of state, just as the region of water anomaly at low temperatures mentioned in the preceding section). We know that with an equal increase in temperature, a gas expands considerably more than a liquid or a solid, verified by the behaviour of the isobars on the diagram of state shown in Fig. 7.4.

The work of expansion done by a system undergoing an isobaric process is determined in the following way:

$$l_{12} = \int_1^2 p\, dv = p(v_2 - v_1). \tag{7.11}$$

For an ideal gas this relationship, taking equation (1.23) into account, can also be presented in the following form:

$$l_{12} = R(T_2 - T_1). \tag{7.12}$$

The quantity of heat added to a system undergoing isobaric heating (or removed from the system, if cooled) is determined in the following manner. From the mathematical statement of the first law of thermodynamics, expressed by Eq. (2.44),

$$dq = di - v\,dp,$$

it follows that for an isobaric process ($dp = 0$)

$$dq = di$$

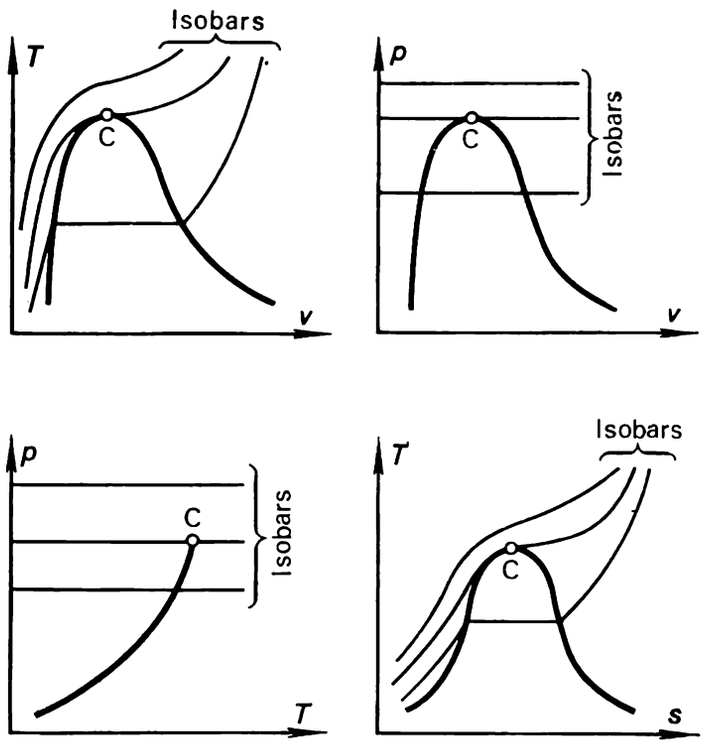

Fig. 7.4

and, consequently, the quantity of heat added to a system undergoing heating from state *1* (with parameters p and T_1) to state *2* (with parameters p and T_2) is equal to the difference between the enthalpies in these states:

$$q_{21} = i_2(p, T_2) - i_1(p, T_1). \tag{7.13}$$

The values of i_1 and i_2 which are needed to calculate q_{21} can be taken from the tables of thermodynamic properties of a given substance or from the diagram of state of this substance.

The difference between the enthalpies of the two states on the isobar can also be expressed in the following way. From the obvious relationship

$$i_2(p, T_2) - i_1(p, T_1) = \int_{T_1}^{T_2} \left(\frac{\partial i}{\partial T}\right)_p dT, \tag{7.14}$$

taking into account Eq. (2.46), we obtain:

$$i_2(p, T_2) - i_1(p, T_1) = \int_{T_1}^{T_2} c_p\,dT. \tag{7.15}$$

It follows from Eq. (7.15), expressing the amount of heat involved in an isobaric process, that (7.13) can be written in the following form:

$$q_{21} = \int_{T_1}^{T_2} c_p \, dT, \tag{7.16}$$

or, which is the same,

$$q_{21} = c_p^{av} (T_2 - T_1), \tag{7.17}$$

where c_p^{av} is the average heat capacity c_p in the (T_1, T_2) temperature interval.

If c_p does not depend on temperature,

$$q_{21} = c_p (T_2 - T_1). \tag{7.18}$$

The change in entropy in an isobaric process, i.e. the difference between the entropies corresponding to states *1* and *2*, is determined from the relationship

$$s_2(p, T_2) - s_1(p, T_1) = \int_{T_1}^{T_2} \left(\frac{\partial s}{\partial T}\right)_p dT, \tag{7.19}$$

or, taking Eq. (4.45) into account,

$$s_2(p, T_2) - s_1(p, T_1) = \int_{T_1}^{T_2} \frac{c_p}{T} dT. \tag{7.20}$$

When heat capacity is independent of temperature in the temperature interval considered and can, therefore, be taken out of the integral sign in Eq. (7.20), we get:

$$s_2(p, T_2) - s_1(p, T_1) = c_p \ln \frac{T_2}{T_1}, \tag{7.21}$$

i.e. on an isobar the dependence of entropy on temperature is logarithmic. The analogy between this equation and Eq. (7.10), expressing the difference in entropies on an isochor, will be easily understood; the only difference consists in the factor preceding the term $\ln T_2/T_1$—the isochoric (constant-volume) heat capacity c_v in one case, and the isobaric (constant-pressure) heat capacity c_p in the other case.

7.3 The isothermal process

The isotherms of a real gas are plotted in the *p-v*, *p-T*, *v-T*, *T-s* diagrams of state shown in Fig. 7.5. If the parameters, or properties, of one state are known, then the parameters of another state, lying on the same isotherm, can be determined if one more parameter is known.

As was shown in Chapter 1, the pressure and volume of an ideal gas are related at any point on an isotherm by Boyle's law (1.17),

$$p_1 v_1 = p_2 v_2,$$

i.e. on an isotherm plotted for an ideal gas the dependence of volume on pressure is hyperbolic.

The isotherms of a real gas, liquids and solids are more intricate (Fig. 7.5). It will be emphasized that for any substance, as was already mentioned in Chapter 5, the quantity $(\partial v/\partial p)_T$ cannot be positive and, consequently, along the isotherm a rise in pressure is accompanied by a decrease in the specific volume of substance.

The work of expansion done by a system undergoing an isothermal process proceeding between states *1* and *2* on an isotherm is determined with

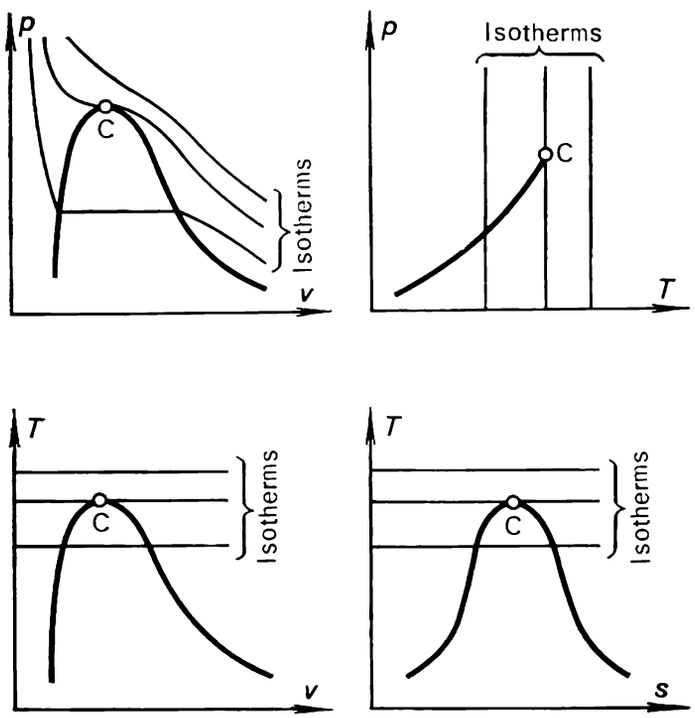

Fig. 7.5

the aid of the general relationship (3.1):

$$l_{12} = \int_{p_1}^{p_2} p\, dv.$$

To calculate this integral, we must know the isothermal dependence of pressure on the specific volume either from the equation of state or from experimental data (in the latter case the integral is calculated applying numerical methods).

Allowing for Eq. (1.23), for an ideal gas we obtain from Eq. (3.1):

$$l_{12} = RT \ln \frac{v_2}{v_1}. \tag{7.22}$$

The equation of an isotherm for an ideal gas can also be written in the following form:

$$l_{12} = RT \ln \frac{p_1}{p_2} = p_1 v_1 \ln \frac{v_2}{v_1} = p_2 v_2 \ln \frac{v_2}{v_1} = p_1 v_1 \ln \frac{p_1}{p_2} = p_2 v_2 \ln \frac{p_1}{p_2}. \tag{7.22a}$$

The amount of heat added to a system (or rejected from the system) undergoing an isothermal process is determined from the known relationship

$$dq = T\, ds.$$

Since T = const,

$$q_{21} = T(s_2 - s_1), \tag{7.23}$$

where s_2 and s_1 are the entropies in states *2* and *1*, respectively.

For an ideal gas, for which, in accordance with Eq. (2.37),

$$du = c_v\, dT,$$

the mathematical statement of the first law of thermodynamics takes the following form:

$$dq = c_v\, dT + p\, dv. \tag{7.24}$$

It follows from this that in an isothermal process ($dT = 0$) for an ideal gas

$$dp = p\, dv, \tag{7.25}$$

i.e. the amount of work performed by an ideal gas undergoing an isothermal process is equal to the amount of heat added to this gas:

$$q_{21} = l_{12}, \tag{7.26}$$

where l_{12} is determined from Eq. (7.22).

The change in entropy of a system undergoing an isothermal process, i.e. the difference in the entropies corresponding to states *1* and *2*, is calculated in the following way.

If the pressures at points *1* and *2* are known, then from the relationship

$$s_2(p_2, T) - s_1(p_1, T) = \int_{p_1}^{p_2} \left(\frac{\partial s}{\partial p}\right)_T dp, \tag{7.27}$$

making use of Maxwell's relation (4.22), we obtain:

$$s_2(p_2, T) - s_1(p_1, T) = -\int_{p_1}^{p_2} \left(\frac{\partial v}{\partial T}\right)_p dp. \tag{7.28}$$

But if the specific volumes at points *1* and *2* are known, then from the relationship

$$s_2(v_2, T) - s_1(v_1, T) = \int_{v_1}^{v_2} \left(\frac{ds}{dv}\right)_T dv, \tag{7.29}$$

allowing for Maxwell's relation (4.23), we have:

$$s_2(v_2, T) - s_1(v_1, T) = \int_{v_1}^{v_2} \left(\frac{\partial p}{\partial T}\right)_v dv. \tag{7.30}$$

To calculate the integrals present in the right-hand side of Eqs. (7.28) and (7.30), we must know the values of $(\partial v/\partial T)_p$ or $(\partial p/\partial T)_v$ on the isotherm plotted for a given substance. These values can be calculated either with the aid of the equations of state or by numerical or graphical differentiation of the experimental data on the p-, v-, T-dependencies for a given substance.

For an ideal gas, the integral present in Eq. (7.28) and (7.30) can be easily calculated. Since for an ideal gas, as can be readily ascertained from

Eq. (1.23),

$$\left(\frac{\partial v}{\partial T}\right)_p = \frac{R}{p} \tag{7.31}$$

and

$$\left(\frac{\partial p}{\partial T}\right)_v = \frac{R}{v}, \tag{7.32}$$

we obtain from Eqs. (7.28) and (7.30):

$$s_2(p_2, T) - s_1(p_1, T) = R \ln \frac{p_1}{p_2}, \tag{7.33}$$

$$s_2(v_2, T) = s_1(v_1, T) = R \ln \frac{v_2}{v_1}. \tag{7.34}$$

In conclusion, let us find the heat capacity inherent in an isothermal process. From the definition of heat capacity it follows that if the addition or removal of heat during an isothermal process does not lead to a change in system temperature, the heat capacity c_T is infinitely large:

$$c_T = \pm\infty \tag{7.35}$$

(the plus sign corresponds to addition of heat to a system, the minus sign indicates the removal of heat from a system).

7.4 The adiabatic process

The name *adiabatic* is given to thermodynamic processes in the course of which heat is neither added nor removed from a system, in other words, no heat transfer occurs during the process, i.e.

$$dq = 0. \tag{7.36}$$

A thermodynamic system in which an adiabatic process proceeds can be visualized as a certain volume confined by boundaries fitted with ideal heat insulation through which no heat transfer can take place; boundaries of this kind are said to be adiabatic.

In real conditions, a process is said to be adiabatic when the system is outfitted with proper heat insulation or when the expansion (or compression) of a gas proceeds so rapidly that no noticeable heat transfer between the gas and the surroundings has time to take place.

Inasmuch as for a reversible process, in accordance with Eq. (3.121),

$$dq = T\,ds,$$

with allowance for Eq. (7.36), it follows that in a reversible adiabatic process

$$ds = 0, \tag{7.37}$$

i.e. the entropy of a system remains constant. In other words, a reversible adiabatic process is an isentropic process at the same time.

It is not by mere chance emphasized here that the process dealt with above is a reversible adiabatic process, since irreversible adiabatic processes are also possible. For example, consider the flow of a real gas in a rough tube covered with an ideal heat insulation preventing any heat transfer through the walls of the tube. The gas will then be in adiabatic flow since no heat is added to it from the outside and no heat is rejected from the gas to the surr-

oundings. But inasmuch as the flow of a real gas in a rough tube is always accompanied by friction, leading to dissipation of the energy of flow, this process is irreversible: as in any irreversible adiabatic process, it proceeds with an increase in the system's entropy. Irreversible processes are characterized by the following inequality

$$T\,ds > dq.$$

In this irreversible adiabatic process $dq = 0$, but $ds > 0$, hence, an irreversible adiabatic process is not isentropic.

Thus, any isentropic process developing in an isolated system can be said to be adiabatic, but not any adiabatic process is isentropic (only reversible adiabatic processes are isentropic).

Here, we shall deal only with reversible adiabatic processes ($ds = 0$).

Let us now turn to the relation between the parameters of various states in a reversible adiabatic process.

To elucidate this problem, it is necessary to formulate the differential equation of an isentropic process.

For an isentropic process ($ds = 0$) the combined mathematical statement of the first and second laws of thermodynamics,

$$T\,ds = du + p\,dv$$

and

$$T\,ds = di - v\,dp,$$

acquire the following form:

$$du = -p\,dv, \tag{7.38}$$

$$di = v\,dp, \tag{7.39}$$

whence,

$$\left(\frac{\partial u}{\partial v}\right)_s = -p, \tag{7.40}$$

$$\left(\frac{\partial i}{\partial p}\right)_s = v. \tag{7.41}$$

These relationships can be used to obtain

$$\left(\frac{\partial i}{\partial u}\right)_s = -\frac{v}{p}\left(\frac{\partial p}{\partial v}\right)_s. \tag{7.42}$$

Relationship (7.41) is the differential equation of an isentropic process, showing how the change in the caloric properties of a system (i and u) is related with the change in its thermal properties (p and v) in an isentropic process.

We shall introduce the following notation:

$$k = \left(\frac{\partial i}{\partial u}\right)_s. \tag{7.43}$$

The quantity k will be referred to as the *exponent of an isentropic process* (or the *isentropic exponent*). Taking into account this new notation, relationship (7.42) becomes:

$$-\frac{v}{p}\left(\frac{\partial p}{\partial v}\right)_s = k. \tag{7.44}$$

The product present in the left-hand side of Eq. (7.44) can be transformed as follows:

$$-\frac{v}{p}\left(\frac{\partial p}{\partial v}\right)_s = -\left(\frac{\partial \ln p}{\partial \ln v}\right)_s;$$

allowing for the above relationship, Eq. (7.44) can be presented in the form:

$$d \ln p = -k\, d \ln v. \tag{7.45}$$

Differential equation (7.45) relates pressure p and volume v in an isentropic process.

Integrating this relationship between the limits *1* and *2* on an isentrop, we obtain:

$$\ln \frac{p_2}{p_1} = -\int_{v_1}^{v_2} k d \ln v. \tag{7.46}$$

If in the interval of the change of state considered (from point *1* to point *2*) the isentropic exponent remains constant, k can be taken out of the integral sign, and Eq. (7.46) reduces to

$$\ln \frac{p_2}{p_1} = -k \ln \frac{v_2}{v_1} \tag{7.47}$$

or, which is the same,

$$\ln \frac{p_2}{p_1} = k \ln \frac{v_1}{v_2}. \tag{7.47a}$$

This relationship, in turn, can be presented in the form

$$\ln \frac{p_2}{p_1} = \ln \frac{v_1^k}{v_2^k}. \tag{7.48}$$

Taking antilogarithms for Eq. (7.48), we obtain:

$$\frac{p_2}{p_1} = \frac{v_1^k}{v_2^k}; \tag{7.49}$$

therefore,

$$p_1 v_1^k = p_2 v_2^k. \tag{7.50}$$

By analogy, taking this system into any third state along the isentrop with parameters p_3 and v_3, we can show that

$$p_1 v_1^k = p_2 v_2^k = p_3 v_3^k = \text{const}.$$

Thus, for any state of a system undergoing an isentropic process (provided the isentropic exponent k remains constant),

$$pv^k = \text{const}. \tag{7.51}$$

This relationship is called the *Poisson equation of an adiabat.*

If the isentropic exponent changes with a change in the state of a system and the dependence of k on the isentrop is known, to calculate p_2 from p_1, v_1, v_2 known, we must calculate the integral present in the right-hand side of Eq. (7.46), applying numerical methods with the values of k known.

We can use the mean (in the interval of states considered) isentropic exponent* k_m. Applying then a method similar to that described above, from

---

* The mean value of k is determined from the relationship

$$k_m = \frac{\int_{v_1}^{v_2} k d \ln v}{\ln \frac{v_2}{v_1}}. \tag{7.52}$$

Eq. (7.46) we get:

$$pv^{km} = \text{const.} \tag{7.51a}$$

It will be noted that the equations of the isentropic process (7.51) or (7.51a) are true for a gas, liquid and solid (while deriving the equations, no assumptions were made regarding the nature of the system undergoing an isentropic process).

The isentropic exponent k (whose value by itself can be used as a property of state) happens to differ significantly for substances in different states of aggregation. For solids and liquids k is rather large, with the magnitude of k varying noticeably with temperature. Consequently, for water at a temperature $t = 0$ °C, $k = 3\,602\,000$; at $t = 50$ °C, $k = 187\,000$; and at $t = 100$ °C, $k = 22\,300$. For gases and vapours the value of k changes (diminishes) rather slightly with temperature, for most gases being equal from 1.3 to 1.7. The

Fig. 7.6

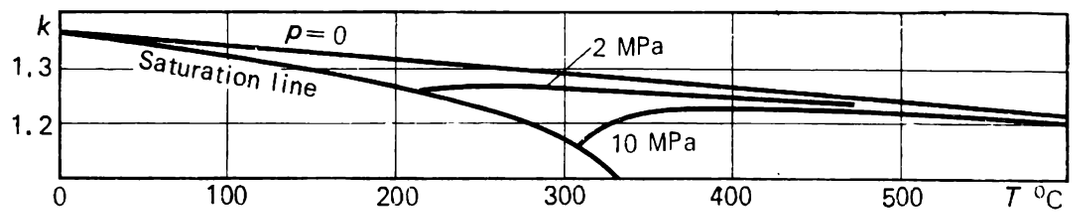

values of k vary noticeably only near the boundary curve. The values of the isentropic exponent k for water vapour are plotted in Fig. 7.6.

The isentropic exponent for an ideal gas is determined in the following way. Equation (7.44),

$$k = -\frac{v}{p}\left(\frac{\partial p}{\partial v}\right)_s,$$

taking account of relationship (4.59)

$$\left(\frac{\partial p}{\partial v}\right)_s = \frac{c_p}{c_v}\left(\frac{\partial p}{\partial v}\right)_T,$$

can also be presented in the form

$$k = -\frac{v}{p}\left(\frac{\partial p}{\partial v}\right)_T \frac{c_p}{c_v}. \tag{7.53}$$

Since for an ideal gas, as follows from Clapeyron's equation,

$$\left(\frac{\partial p}{\partial v}\right)_T = -\frac{p}{v}, \tag{7.54}$$

for an ideal gas Eq. (7.53) reduces to

$$k_{\text{ideal}} = \frac{c_p}{c_v}. \tag{7.55}$$

Since, in accordance with Eq. (2.54), for an ideal gas

$$c_p = c_v + R,$$

it follows from equation (7.55) that

$$k_{\text{ideal}} = 1 + \frac{R}{c_v}. \tag{7.56}$$

Since the heat capacities of an ideal gas vary only slightly with temperature, the quantity k_{ideal} can be considered with a high degree of accuracy to be independent of temperature. The molar isochoric (constant-volume) heat capacity μc_v of an ideal gas is known to be equal to about 13 kJ/(kmol-K) $\cong$ 3 kcal/(kmol-K) for a monoatomic ideal gas, 21 kJ/(kmol-K) $\cong$ 5 kcal/(kmol-K) for a diatomic one, and 29 kJ/(kmol-K) $\cong$ 7 kcal/(kmol-K) for triatomic and multiatomic gases. Inasmuch as $\mu R \cong 8.3$ kJ/(kmol-K) $\cong$ 2 kcal/(kmol-K), Eq. (7.56) can be used to obtain the following approximate isentropic exponents for an ideal gas, k_{ideal}:

monoatomic gas	1.67
diatomic gas	1.40
tri- and multiatomic gases	1.29

For air in an ideal-gas state the isentropic exponent is about 1.35.

It was stated above that for any two points lying on an isentrop the quantities p and v are related by Eq. (7.50),

$$p_1 v_1^k = p_2 v_2^k,$$

where k is the isentropic exponent, constant in the interval of states between points *1* and *2*; but if k is variable in this interval of parameters of state, then Eq. (7.50) must contain the quantity k_m, which is the mean exponent for this interval of state parameters.

The relation between the temperatures T_1 and T_2 at the two points on the isentrop can be found as follows.

From relationship

$$T_2(s, p_2) - T_1(s, p_1) = \int_{p_1}^{p_2} \left(\frac{\partial T}{\partial p}\right)_s dp, \tag{7.57}$$

remembering that

$$\left(\frac{\partial T}{\partial p}\right)_s = -\left(\frac{\partial T}{\partial s}\right)_p \left(\frac{\partial s}{\partial p}\right)_T, \tag{7.58}$$

and also allowing for Eqs. (4.22) and (4.45), we obtain:

$$T_2(s, p_2) - T_1(s, p_1) = \int_{p_1}^{p_2} \frac{T\left(\frac{\partial v}{\partial T}\right)_p}{c_p} dp. \tag{7.59}$$

To calculate T_2 from a known T_1 with the aid of Eq. (7.59), the values of $(\partial v/\partial T)_p$ and c_p must be available. The calculations are also hindered by the fact that the temperature T is under the integral sign. To facilitate the problem of finding the various parameters for an isentropic process, isotherms, isochors, lines of constant entropy, isentrops, as well as isobars, are often plotted on the diagrams of state. In Fig. 7.7 isentrops are plotted on the p-v, p-t and T-v diagrams.

For an ideal gas undergoing an isentropic process, Eq. (7.50) can be used to obtain formulas relating T and v and also T and p, on an isentrop. In fact, allowing for an ideal gas that

$$p = \frac{RT}{v},$$

we find from Eq. (7.50) that

$$T_1 v_1^{k-1} = T_2 v_2^{k-1}, \tag{7.60}$$

i.e.

$$\frac{T_2}{T_1} = \left(\frac{v_1}{v_2}\right)^{k-1}. \tag{7.60a}$$

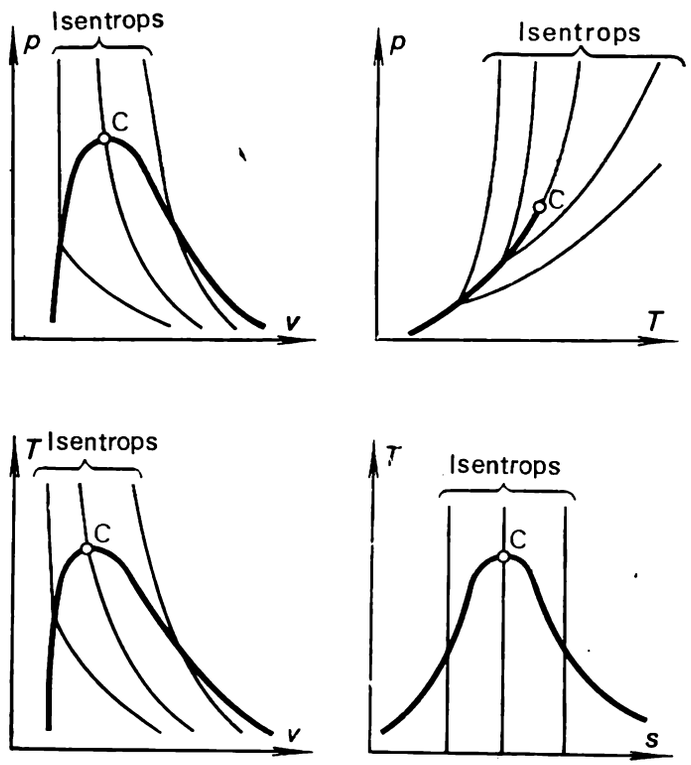

Fig. 7.7

Further, substituting into equation (7.50)

$$v = \frac{RT}{p},$$

we obtain:

$$\frac{T_2}{T_1} = \left(\frac{p_2}{p_1}\right)^{\frac{k-1}{k}} \tag{7.61}$$

It follows from Eq. (7.61) that a decrease in pressure on an isentrop leads to a decrease in the temperature of the ideal gas. For a real gas, it is clear from Eq. (7.59) that inasmuch as c_p is always greater than zero, $c_p > 0$, and usually* $(\partial v/\partial T)_p$ is also greater than zero, the integral in the right-hand side of this equation is positive. Consequently, if $p_1 < p_2$, then $T_1 < T_2$. In this manner a substance undergoing isentropic (reversible adiabatic) expansion cools. As will be seen subsequently, the process of reversible adiabatic expansion is used effectively for cooling gases.

* It will be recalled that on rare occasions the quantity $(\partial v/\partial T)_p$ becomes negative (for instance, for water in the region of density anomaly at low temperatures). An increase in pressure p on an isentrop then leads to a drop in T, as can be seen from Eq. (7.59).

The work of expansion done by a system in an isentropic process is determined in the following manner. It is clear from Eq. (2.23)

$$dq = du + p\,dv$$

that for any adiabatic process ($dq = 0$), including the reversible adiabatic (i.e. isentropic) process,

$$p\,dv = -\,du, \tag{7.62}$$

and, consequently, in accordance with Eq. (3.1)

$$l_{12} = \int_1^2 p\,dv, \tag{3.1a}$$

for the work of expansion performed by a system undergoing an adiabatic process we obtain:

$$l_{12} = u_1 - u_2. \tag{7.63}$$

Thus, in an adiabatic process the work of expansion is performed by a system at the expense of its internal energy. This is understandable—indeed no heat is added to the system undergoing an adiabatic process, and the only source of energy which would permit work to be performed is the internal energy of the system itself.

Equation (7.63) is valid not only for an isentropic, i.e. reversible adiabatic process, but also for an irreversible adiabatic process. The equations set forth below, however, are true only for isentropic processes, since in deriving these equations the concept of the isentropic exponent is being used, which pertains only to isentropic processes.

The formula for work performed in an isentropic process, l_{12}, can be presented in another form. Inasmuch as, in accordance with Eq. (7.50), for an isentrop

$$p = \frac{p_1 v_1^k}{v^k}, \tag{7.64}$$

substituting this expression for p in Eq. (3.1a),

$$l_{12} = \int_1^2 \frac{p_1 v_1^k}{v^k}\,dv, \tag{7.65}$$

and integrating, we obtain (taking into account that $p_1 v_1^k$ is const):

$$l_{12} = \frac{p_1 v_1}{k-1}\left[1 - \left(\frac{v_1}{v_2}\right)^{k-1}\right], \tag{7.66}$$

or, allowing for Eq. (7.50),

$$l_{12} = \frac{p_1 v_1}{k-1}\left[1 - \left(\frac{p_2}{p_1}\right)^{\frac{k-1}{k}}\right]. \tag{7.67}$$

It should be emphasized that Eqs. (7.66) and (7.67) are suitable to calculate l_{12}, provided the isentropic exponent k remains constant between the states *1* and *2*. But if k varies and Eqs. (7.66) and (7.67) are used, calculations should be based on the mean value of k, i.e. k_m, for the given interval.

For an ideal gas the formulas for the work of expansion can be represented in a different form. Since for an ideal gas

$$p_1 v_1 = RT_1,$$

Eqs. (7.66) and (7.67) acquire the following form:

$$l_{12} = \frac{RT_1}{k-1}\left[1 - \left(\frac{v_1}{v_2}\right)^{k-1}\right] \tag{7.68}$$

and

$$l_{12} = \frac{RT_1}{k-1}\left[1 - \left(\frac{p_2}{p_1}\right)^{\frac{k-1}{k}}\right]. \tag{7.69}$$

For an ideal gas undergoing an isentropic process, in accordance with Eq. (7.60a),

$$\left(\frac{v_1}{v_2}\right)^{k-1} = \frac{T_2}{T_1},$$

and from Eq. (7.68) we obtain:

$$l_{12} = \frac{R}{k-1}(T_1 - T_2). \tag{7.70}$$

From Eq. (7.66)

$$l_{12} = \frac{p_1 v_1}{k-1}\left(1 - \frac{T_2}{T_1}\right). \tag{7.71}$$

Thus

$$l_{12} = \frac{1}{k-1}(p_1 v_1 - p_2 v_2), \tag{7.72}$$

(inasmuch as $\frac{p_1 v_1}{T_1} T_2 = RT_2 = p_2 v_2$).

Since the internal energy of an ideal gas depends only on temperature and is independent of volume, in accordance with Eq. (2.37),

$$du = c_v dT$$

and, consequently,

$$u_1(s, T_1) = u_2(s, T_2) = \int_{T_2}^{T_1} c_v\, dT. \tag{7.73}$$

Thus, by Eq. (7.63),

$$l_{12} = \int_{T_1}^{T_2} c_v\, dT. \tag{7.74}$$

If the dependence of the heat capacity c_v of an ideal gas on temperature is ignored or use is made of the concept of the mean heat capacity for a given temperature interval, then Eq. (7.74) takes the following form:

$$l_{12} = c_v (T_1 - T_2). \tag{7.75}$$

It will be emphasized once more that Eqs. (7.63), (7.66) and (7.67) are applicable both to real substances and ideal gases, whereas Eqs. (7.68) to (7.75) are valid only for ideal gases.

The amount of heat added to a system undergoing an isentropic process is equal to zero:

$$q_{21} = 0, \quad \text{or} \quad dq = 0. \tag{7.76}$$

The change of entropy in an isentropic process is also zero. Naturally, in an isentropic process the heat capacity is zero:

$$c_s = \text{const} = 0. \tag{7.77}$$

This conclusion stands to reason, for, if a system undergoes an isentropic process, the system's temperature changes, although no heat is added to the system.

7.5 Polytropic processes

The name polytropic is given to reversible thermodynamic processes that satisfy the equation

$$pv^n = \text{const} \tag{7.78}$$

with an arbitrary value of n constant for the given polytropic process.

The quantity n is referred to as the *polytropic exponent*, which varies for different polytropic processes from $+\infty$ to $-\infty$.

The curve representing a polytropic process on the diagram of state is called a *polytrope*.

The concept of polytropic processes was introduced in thermodynamics by an analogy with the concept of the adiabatic processes.

The equation of a polytropic process (7.78) is similar to that of an adiabat (7.51) in external appearance, the only essential difference between the two equations being that while the isentropic (adiabatic) exponent k is variable in the general case, the very concept of the polytropic process is based on the assumption that the polytropic exponent n is constant. In a polytropic process heat may be added to or removed from a system.

The concept of polytropic processes finds wide application in studying the processes of compression and expansion in gas engines; polytropic processes often prove to be helpful in approximating the real gas processes in engines. The real processes of compression in gas engines are usually neither adiabatic nor isothermal but occupy an intermediate position between the two. That is why the values of the polytropic exponent n most frequently encountered in practical problems range from 1 to k.*

For any point lying on a polytrop Eq. (7.78) reduces to

$$p_1 v_1^n = p_2 v_2^n.$$

If a polytropic process occurs in an ideal gas, it is easy to obtain from Eq. (7.78) and Clapeyron's equation that

$$\frac{T_2}{T_1} = \left(\frac{v_1}{v_2}\right)^{n-1} \tag{7.79}$$

and

$$\frac{T_2}{T_1} = \left(\frac{p_2}{p_1}\right)^{\frac{n-1}{n}}. \tag{7.80}$$

These equations, just as Eq. (7.78), relate p, v and T at any two points on a polytrope. Equation (7.78) is true both for real and ideal gases, whereas Eqs. (7.79) and (7.80) are applicable only to ideal gases.

* It follows from Eq. (7.78) that at $n = 1$ this equation coincides with Boyle's law for an isothermal process in an ideal gas ($pv = \text{const}$).

In addition to the practical expediency mentioned above, the introduction of the concept of the polytropic process is of great importance from the methodological veiwpoint. The concept of the polytropic process correlates all other known thermodynamic processes; it can be easily proved that the isochoric, isobaric and adiabatic processes are particular cases of polytropic processes.

In fact, from the equation of the polytropic process (7.78) it follows that a polytropic process with an exponent $n = 0$ is merely a conventional isobaric process $p = \text{const}$.

Fig. 7.8

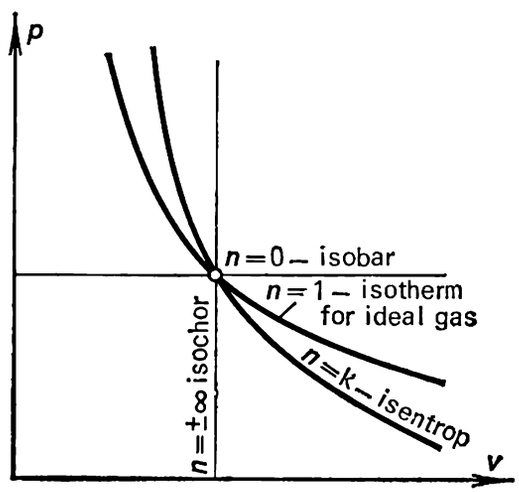

From Eq. (7.78), presented in the form

$$p^{1/n}v = \text{const},$$

it is clear that a polytropic process with an exponent $n = \pm\infty$ is an isochoric process, $v = \text{const}$.

The equation of a polytrop with an exponent $n = k$ turns into Poisson's equation for an adiabat.

Finally, the equation of a polytrope with an exponent $n = 1$ is the equation for an ideal gas

$$pv = \text{const}.$$

(It will be emphasized that this equation is only true for an isothermal process in an ideal gas; it is impossible to derive from the equation of a polytrop (7.78) an equation for the isotherm of a real gas. The process $n = 1$ can, of course, take place in a real gas, but this process is not isothermal.)

Figure 7.8 shows a p-v diagram on which the curves of various polytropic processes are plotted.

The work of expansion done by a system undergoing a polytropic process between points *1* and *2* is determined with the aid of Eq. (3.1),

$$l_{12} = \int_1^2 p\,dv.$$

Since, by Eq. (7.78), for a polytrope

$$p = \frac{p_1 v_1^n}{v^n}, \tag{7.81}$$

integrating the expression for the work of expansion l_{12} (note that $p_1v_1^n$ is constant), we obtain for the work of expansion in a polytropic process:

$$l_{12}=\frac{p_1v_1}{n-1}\left[1-\left[\frac{v_1}{v_2}\right)^{n-1}\right], \tag{7.82}$$

or, which is the same

$$l_{12}=\frac{p_1v_1}{n-1}\left[1-\left(\frac{p_2}{p_1}\right)^{\frac{n-1}{n}}\right]. \tag{7.83}$$

For an ideal gas Eqs. (7.82) and (7.83) can be rearranged in the following way:

$$l_{12}=\frac{RT_1}{n-1}\left[1-\left(\frac{v_1}{v_2}\right)^{n-1}\right], \tag{7.84}$$

$$l_{12}=\frac{RT_1}{n-1}\left[1-\left(\frac{p_2}{p_1}\right)^{\frac{n-1}{n}}\right], \tag{7.85}$$

$$l_{12}=\frac{R}{n-1}(T_1-T_2), \tag{7.86}$$

$$l_{12}=\frac{p_1v_1}{n-1}\left(1-\frac{T_2}{T_1}\right), \tag{7.87}$$

$$l_{12}=\frac{1}{n-1}(p_1v_1-p_2v_2). \tag{7.88}$$

Equations (7.82) and (7.83) are true for polytropic processes both in real and ideal gases, and Eqs. (7.84) to (7.88) are applicable only to ideal gases.

The amount of heat added to or removed from a system undergoing a polytropic process is determined in the following way. The amount of heat q can be found with the aid of the mathematical statement of the first law of thermodynamics:

$$q_{21}=(u_2-u_1)+l_{12},$$

calculating the work of expansion done by the system [with the aid of Eqs. (7.82) or (7.83)] [and the change in the internal energy of the system undergoing the polytropic process between points *1* and *2*.

The difference in the internal energies at points *1* and *2* is determined in the usual way. Integrating relationship (2.29),

$$du=\left(\frac{\partial u}{\partial T}\right)_v dT+\left(\frac{\partial u}{\partial v}\right)_T dv,$$

between the limits represented by the points *1* and *2* on the polytrope, and taking into account the fact that, by Eqs. (2.31) and (4.25),

$$\left(\frac{\partial u}{\partial T}\right)_v=c_v$$

and

$$\left(\frac{\partial u}{\partial v}\right)_T=T\left(\frac{\partial p}{\partial T}\right)_v-p,$$

we obtain:

$$u_2(T_2, v_2)-u_1(T_1, v_1)=\int_{T_1}^{T_2} c_v\,dT+\int_{v_1}^{v_2}\left[T\left(\frac{\partial p}{\partial T}\right)_v-p\right]dv. \tag{7.89}$$

To use this equation for calculations, the parameters of the two points on the polytrop must be known: T_1 and v_1, T_2 and v_2.

If we are dealing with a polytropic process in an ideal gas (it will be noted that in calculating a number of polytropic processes in gas engines and compressors, the ideal-gas approximation proves to be quite sufficient for engineering calculations), the equations for calculating q_{21} can be reduced to a simpler form. Indeed, inasmuch as for an ideal gas $(\partial u/\partial v)_T = 0$,

$$u_2 - u_1 = \int_{T_1}^{T_2} c_v \, dT. \tag{7.90}$$

If the dependence of the constant-volume heat capacity c_v on temperature can be ignored for an ideal gas, it follows that

$$u_2 - u_1 = c_v (T_2 - T_1). \tag{7.91}$$

Now calculate q_{21} with the aid of Eq. (2.18). Substituting into the latter the value of $u_2 - u_1$ from Eq. (7.91) and the value of l_{12} from equation (7.86), we obtain:

$$q_{21} = \left(\frac{R}{n-1} - c_v\right)(T_2 - T_1). \tag{7.92}$$

Since, by Mayer's relation,

$$c_p - c_v = R,$$

we find from Eq. (7.92) that

$$q_{21} = c_v \frac{\frac{c_p}{c_v} - n}{n-1}(T_1 - T_2). \tag{7.93}$$

As was shown in Sec. 7.4, for an ideal gas the ratio of the heat capacities c_p/c_v is the exponent of the isentrop of an ideal gas (7.55),

$$k_{\text{ideal}} = \frac{c_p}{c_v}.$$

Taking the above ratio into account, Eq. (7.93) becomes

$$q_{21} = c_v \frac{k-n}{n-1}(T_1 - T_2). \tag{7.94}$$

Equation (7.94) determines the amount of heat added to an ideal gas (or removed from it) in a polytropic process.

Since, in accordance with the general definition of heat capacity

$$c_x = \frac{dq_x}{dT},$$

the heat capacity of a polytropic process can be determined as

$$c_n = \frac{dq_n}{dT}; \tag{7.95}$$

it is clear that

$$dq = c_n dT \tag{7.96}$$

and

$$q_{21} = \int_1^2 c_n \, dT. \tag{7.97}$$

If within the temperature interval considered the heat capacity c_n remains constant between points *1* and *2*, Eq. (7.97) permits us to derive the following equation for calculating the amount of heat added to a system in a polytropic process:

$$q_{21} = c_n (T_2 - T_1). \tag{7.98}$$

It is interesting to note that inasmuch as for an ideal gas whose heat capacity does not change with temperature

$$u_2 - u_1 = c_v (T_2 - T_1)$$

[see Eq. (7.91)], the above relationship and Eq. (7.98) give:

$$\frac{u_2 - u_1}{q_{21}} = \frac{c_v}{c_n}. \tag{7.99}$$

In this case, the heat capacity of an ideal gas does not change with temperature and the ratio c_v/c_n remains constant throughout the given polytropic process; consequently, by Eq. (7.99), in this process

$$\frac{\Delta u}{q_{21}} = \text{const}. \tag{7.100}$$

Comparing Eqs. (7.94) and (7.98), we conclude that the expression $c_v (n - k)/(n - 1)$ in the right-hand side of Eq. (7.94) is nothing but the heat capacity of an ideal gas undergoing a polytropic process:

$$c_n = c_v \frac{n-k}{n-1}. \tag{7.101}$$

Let us analyze this relationship for the polytropic heat capacity of an ideal gas.

At $n = 0$, Eq. (7.101) reduces to

$$c_n = c_v k,$$

or, taking into account Eq. (7.55),

$$c_n = c_p.$$

This result is understandable since, as it was shown above, a polytrope with an exponent $n = 0$ is an isobar.

With $n = \infty$, rearranging Eq. (7.101) as

$$c_n = c_v \frac{1 - \frac{k}{n}}{1 - \frac{1}{n}},$$

we obtain:

$$c_n = c_v,$$

which is also clear, since a polytrope with an exponent $n = \infty$ is an isochor.

At $n = 1$, a zero appears in the denominator of the right-hand side of Eq. (7.101) and, consequently,

$$c_n = \pm\infty;$$

it will be recalled that the heat capacity of an isothermal process is infinitely large.

Finally, at $n = k$,

$$c_n = 0,$$

which is the heat capacity of an adiabatic process.

Fig. 7.9

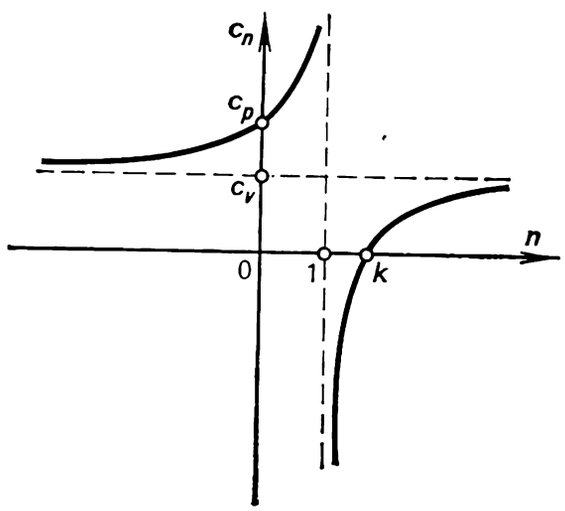

It is interesting to note that, as Eq. (7.101) shows, for $1 < n < k$ the heat capacity c_n is negative. In polytropic processes an expanding gas produces work, considerably exceeding the amount of heat added to the gas undergoing expansion. Work is then performed not only at the expense of the heat added to the gas but also due to the expenditure of some amount of the internal energy of the gas. All the heat added to the gas undergoing expansion converts into work, and the decrease in the internal energy leads to a drop in gas temperature. Thus, we are concerned here with a rather peculiar process: heat is added to the system, but the system temperature decreases. According to the general definition of heat capacity,

$$c_n = \frac{dq_n}{dT},$$

we conclude that the heat capacity of such a polytropic process is negative. In Fig. 7.9 the heat capacity of a polytropic process c_n is plotted as a function of the polytropic exponent n.

The change in system entropy in a polytropic process, i.e. the difference in the entropies corresponding to the points *1* and *2* on the polytrope, is determined from the relationship

$$s_2 - s_1 = \int_{T_1}^{T_2} \left(\frac{\partial s}{\partial T}\right)_n dT. \tag{7.102}$$

Since it is clear that

$$\left(\frac{\partial s}{\partial T}\right)_n = \frac{c_n}{T}, \tag{7.103}$$

Eq. (7.102) acquires the following form:

$$s_2 - s_1 = \int_{T_1}^{T_2} \frac{c_n}{T} dT. \tag{7.104}$$

If the heat capacity of a polytropic process c_n remains constant in a given interval of properties of state, Eq. (7.104) becomes

$$s_2 - s_1 = c_n \ln \frac{T_2}{T_1}. \tag{7.105}$$

Thus, the dependence of entropy on temperature in a polytropic process is logarithmic.*

Fig. 7.10

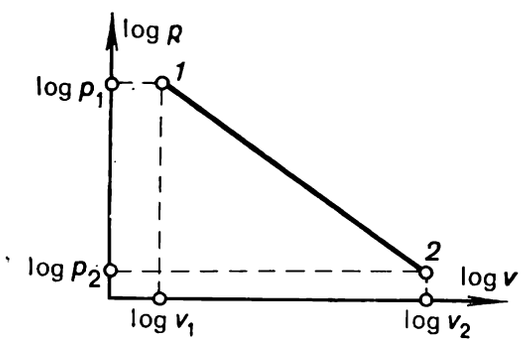

In order to determine the polytropic exponent for a particular gas process, experimental data on this process should be available; it is most convenient to make use of the curve of the process plotted on a p-v diagram. Taking the logarithm of the equation of a polytrope,

$$p_1 v_1^n = p_2 v_2^n,$$

we obtain:

$$n = \frac{\log p_1 - \log p_2}{\log v_2 - \log v_1}. \tag{7.106}$$

Plotting the p-v diagram of the process on log paper, on which the curve becomes a line (Fig. 7.10), it is easy to find the exponent n for the given curve of the process; as can be seen from Eq. (7.106), the exponent n is the slope of this line on the logarithmic p-v diagram. If the curve of the polytropic process fails to be completely straight on the logarithmic p-v diagram and has a certain curvature, this line should be divided into several straight sections, the value of the exponent n for each of these sections should be found, and then the mean value of the exponent n for the entire line should be calculated. Having determined the exponent n for the given real process, we can use the previously derived equations to calculate the work of expansion, l_{12}, the amount of heat participating in the process, q_{21}, the temperature at any point of the process, etc.

---

* The method of derivation and the obtained equation (7.105) are not applicable to the process with $n = 1$ (isothermal process); with $n = 1$ an indeterminate form $\infty \cdot 0$ appears in the right-hand side of Eq. (7.105).

7.6 Throttling. The Joule-Thomson effect

It is well known from experience that if an obstacle placed in the flow of a gas or liquid in a pipe or conduit causes an abrupt reduction in the cross-sectional area of the flow, and then the cross-sectional area of the flow increases, the pressure of the fluid downstream from the restriction is less than the pressure upstream. The resistance to fluid flow by such an obstacle is called

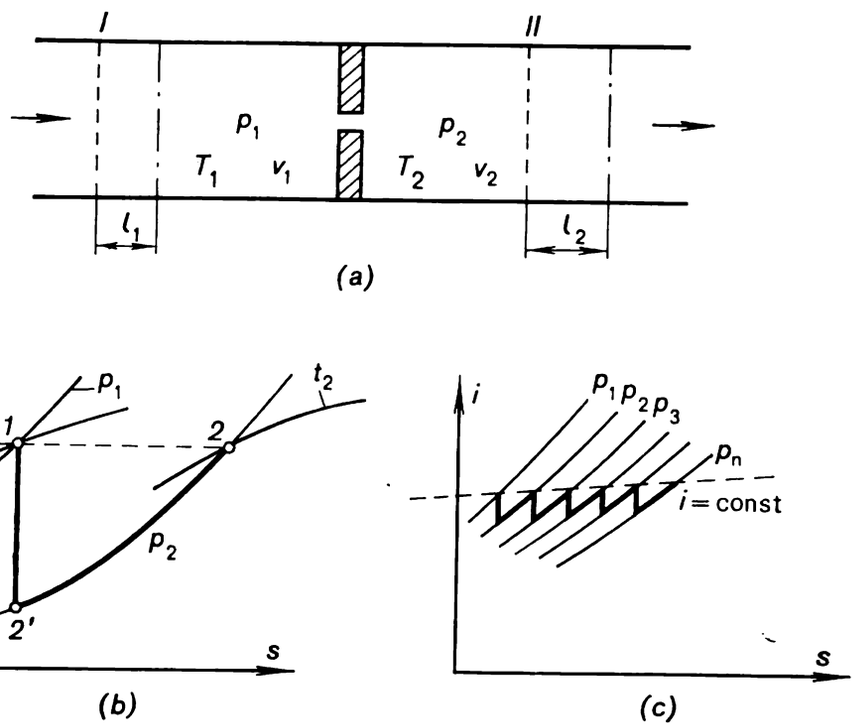

Fig. 7.11

local resistance. The effect of the drop in the pressure of a working medium as it flows through a conduit with an obstacle is called *throttling*.

Throttling is often encountered in practice, for instance, during the flow of water through a partly open faucet or when air flows through a partly open air damper. In these cases, due to the resistance to flow offered by the throttling element (faucet or damper), the pressure downstream from the obstacle diminishes.

Let us elucidate the basic regularities of throttling.

The physics of the drop in pressure after a local resistance consists in that the energy of flow is spent to overcome this local resistance (is dissipated).

Consider the process of fluid flow in a pipe in which there is a local resistance, such as an orifice (Fig. 7.11).

The cross-sectional area of the pipe is assumed to be the same upstream and downstream from the orifice, which makes it possible to ignore the change in the kinetic energy of the flow.

In the process of throttling heat can be added to the working medium. First, consider a process of throttling in which heat is neither added nor removed from the fluid, the so-called process of *adiabatic throttling*. The walls of the pipe are assumed to be covered with an ideal heat insulation, preventing heat exchange with the surroundings.

Consider the mass of gas confined at the given moment between the cross section I (upstream from the local resistance) and II (downstream from the local resistance), as shown in Fig. 7.11*a*. Since the gas is in motion, the denoted cross sections of the gas (or weightless pistons) I and II move along the pipe. The cross-sectional area of the pipe, i.e. the area of these fictitious pistons, is denoted by Σ. Denote the pressure, specific volume and temperature of the gas by p_1, v_1, and T_1, respectively, before the orifice, and by p_2, v_2, and T_2 after the orifice.

In a certain time interval piston I will move along the pipe through a distance l_1 and piston II will cover a distance l_2. Inasmuch as the pressure and the density of the gas are smaller after the orifice than before it, it is obvious that $l_2 > l_1$. To displace piston I through distance l_1, work must be performed equal to

$$L_1 = p_1 l_1 \Sigma. \tag{7.107}$$

Denote by

$$V_1 = l_1 \Sigma \tag{7.108}$$

the volume of gas displaced by piston I during the interval of time through the orifice.

Since

$$V_1 = v_1 G, \tag{7.109}$$

where G is the mass of gas flowing through the orifice (throttle) and v_1 is the specific volume of gas prior to throttling, it follows that

$$L_1 = p_1 v_1 G. \tag{7.110}$$

The work performed by moving piston II to overcome the pressure p_2 is calculated in a similar way:

$$L_2 = p_2 v_2 G. \tag{7.111}$$

As the mass of gas confined between the sections I and II is displaced, work is performed in a certain time interval, equal to the difference between the work L_2 performed by piston II and the work L_1 done on piston I:

$$L = L_2 - L_1, \tag{7.112}$$

or, by (7.110) and (7.111),

$$L = (p_2 v_2 - p_1 v_1) G. \tag{7.113}$$

This work, spent to overcome the local resistance, is converted into heat. It will be recalled that the quantity $(p_2 v_2 - p_1 v_1)$ is commonly referred to as the *work of displacement.*

It is the adiabatic throttling that is being considered here, and, in accordance with Eq. (7.63), in an adiabatic process work can be performed only at the expense of a decrease in internal energy of the system. Consequently,

$$L = (u_1 - u_2) G, \tag{7.114}$$

where u_1 and u_2 are the internal energy per unit mass of the gas before and after the orifice, respectively.

Equating the right-hand sides of Eqs. (7.113) and (7.114), we get:

$$u_1 + p_1 v_1 = u_2 + p_2 v_2, \tag{7.115}$$

or, which is the same,

$$i_1 = i_2. \tag{7.116}$$

We have arrived at an important conclusion: Equation (7.116) shows the enthalpy of a working medium undergoing adiabatic throttling to be the same upstream and downstream from a local resistance (orifice).

We are concerned here with the state of a throttled substance before and after the throttling element. Concerning the process taking place in the throttle proper, it will be noted that the enthalpy of the gas or liquid can change as it flows through it. In fact, since the throttle or any other local resistance constitutes a reduction in the passage of the pipe, the flow of fluid accelerates as it passes through the throttle, its kinetic energy increases and, consequently, the enthalpy of the flow decreases. Once the cross section of the flow increases again after the throttle, the flow decelerates, its kinetic energy decreases, and its enthalpy increases to the former magnitude.

For a better understanding of the physics of the processes taking place in a flow subjected to throttling, one must refer to the previously derived statements of the first law of thermodynamics for a flow process.

As was shown in Sec. 2.6, the mathematical statement of the first law of thermodynamics has the following form for any flow, whether frictional or frictionless [see Eq. (2.68*b*)]:

$$dq_{\text{ext}} = di + w\,dw + g\,dh + dl_{\text{mech}},$$

or in the integral form

$$q_{\text{ext}} = (i_2 - i_1) + \frac{w_2^2 - w_1^2}{2} + g\,(h_2 - h_1) + l_{\text{mech}}. \tag{7.117}$$

For an adiabatic ($q_{\text{ext}} = 0$) horizontal ($h_1 = h_2$) flow, whose velocity is relatively low ($w_1 \cong w_2 \cong 0$) at the points considered, in the absence of mechanical work ($l_{\text{mech}} = 0$)—we considered precisely such a flow in analyzing the throttling process—Eq. (7.117) clearly acquires the following form:

$$i_1 = i_2,$$

which is in agreement with the conclusion of the constancy of enthalpy in adiabatic throttling, obtained above in a somewhat different way.

It follows from the above that the constancy of enthalpy is the property of any—both reversible and irreversible—horizontal adiabatic low-velocity flow, producing no mechanical work, and not only of a throttled flow. Hence, the condition of enthalpy constancy itself does not reveal the peculiarities which are characteristic only of the throttling process.

Let us turn now to Eq. (2.72), derived in Sec. 2.6 for a horizontal frictional flow producing no mechanical work:

$$w\,dw = -v\,dp - dl_{\text{fr}}.$$

For a flow with a relatively low velocity $w \cong 0$ (which is precisely what happens in the case of throttling) we obtain:

$$dl_{\text{fr}} = -v\,dp, \tag{7.118}$$

i.e. in this kind of flow velocity drops along the flow ($dp < 0$) due to the work spent by the flow to overcome friction ($dl_{\text{fr}} > 0$—the work produced by the flow is positive). If there were no friction, the work produced along the flow would remain constant.

This conclusion makes the similarity between the processes of throttling and friction clear, although the former is characterized by an increase in the

kinetic energy of flow at the expense of enthalpy with subsequent stagnation and reverse conversion of the kinetic energy of flow into potential energy, characterized by an increase in enthalpy to its initial magnitude; this process can be clearly illustrated on an *i-s* diagram (Fig. 7.11*b*). On the diagram, the line *1-2'* reflects the decrease in enthalpy as the flow passes through the throttle and pressure drops from p_1 to p_2; line *2'-2* represents stagnation of the flow downstream from the throttle, resulting in a decrease in the kinetic energy of flow and in the restoration of its enthalpy to its initial magnitude. The heat liberated in an adiabatic flow due to stagnation is transferred to the working medium. In this way, in the typically irreversible process considered $i_1 = i_2$, but $di \neq 0$. When throttling is affected through a porous plug, a whole series of elementary processes of this kind takes place (Fig. 7.11*c*), approaching the limit $di = 0$ with an increase in the number of pores.

The regularities formulated below for the process of throttling occurring in a fluid passing through a local resistance will also be true for conventional flow with friction, which in the light of what was said above can be considered as throttling "stretched" along the entire conduit or passage.

The following question may arise: if an adiabatic flow, as was shown above, performs work against the forces of friction or does work to overcome a local resistance, why, then, does its enthalpy remain constant? It would seem that its enthalpy should diminish since the energy of the flow is expended to perform work. The enthalpy of this adiabatic flow remains constant because the work done by the flow (at the expense of its internal energy) against the forces of friction, l_{fr}, converts, as was indicated in Sec. 2.6, into frictional heat q_{fr}, which is absorbed by the flow. This can be seen from the equation

$$dq = di - v\,dp.$$

In fact, since for a flow with friction the quantity q, present in the above relationship, represents the sum of the heat added to the flow from the outside q_{out} and the frictional heat q_{fr}:

$$q = q_{out} + q_{fr},$$

Eq. (2.44) acquires the following form:

$$dq_{out} + dq_{fr} = di - v\,dp; \tag{7.119}$$

thus it follows that for an adiabatic isolated flow ($dq_{out} = 0$) we obtain:

$$dq_{fr} = di - v\,dp. \tag{7.120}$$

Since the frictional heat is equivalent to the work due to friction, i.e.

$$q_{fr} = l_{fr},$$

taking Eq. (7.118) into account, we obtain from (7.120):

$$di = 0,$$

i.e. the condition for enthalpy constancy previously obtained.

Let us now find out how the other properties of a gas—entropy, temperature, etc.—change in the process of adiabatic throttling.

As was already mentioned, throttling is essentially an irreversible process. In fact, if we imagine a process of throttling in the reverse direction (for instance, if we reverse the direction of gas flow in the pipe illustrated in Fig. 7.11*a*), throttling will be accompanied as before by a drop in pressure

when the gas flows through a local resistance (throttle). This is natural, since the flow will spend energy to overcome the local resistance, irrespective of the direction of flow. Inasmuch as throttling is evidently irreversible, the entropy of the fluid involved increases in the course of throttling ($ds > 0$). Of course, for different kinds of throttling, differing from one another in the quantities of heat added to the fluid in the process of throttling, the entropy increment will be different. Let us calculate the increase in entropy for this particular case of throttling, for adiabatic throttling.

Before we proceed to calculate the change in entropy in the process of throttling, one essential observation must be made. The differential equations of thermodynamics, which we shall use in calculating the change in entropy, temperature and other properties of substance due to adiabatic throttling, are applicable only to reversible processes, as was already mentioned in Chapters 3 and 4. Therefore in order to use these equations to calculate the change of the state of a fluid undergoing irreversible adiabatic throttling from state *1* to state *2*, we must first select the pattern of a reversible process during which the given fluid passes from the same initial state *1* (in front of the throttle) into the same final state *2* (after the throttle). The change in entropy will be calculated for this reversible process, but inasmuch as entropy is a function of state, the difference in the entropies of the fluid in states *1* and *2* will be the same as for the process of throttling which we are interested in. As such a hypothetical reversible process we can use the reversible process of gas expansion with the addition (removal) of heat, proceeding in such a way that the enthalpy of the gas remains constant during the process.*

The change in the entropy of the gas undergoing this reversible process (equal to the change in entropy of the gas undergoing throttling from state *1* to state *2*) is determined from the following relationship:

$$s_2(i, p_2) - s_1(i, p_1) = \int_{p_1}^{p_2} \left(\frac{\partial s}{\partial p}\right)_i dp, \tag{7.121}$$

which, taking into account Eq. (4.43), reduces to

$$s_2(i, p_2) - s_1(i, p_1) = -\int_{p_1}^{p_2} \frac{v}{T} dp, \tag{7.122}$$

or, which is the same,

$$s_2(i, p_2) - s_1(i, p_1) = \int_{p_2}^{p_1} \frac{v}{T} dp \tag{7.122a}$$

---

* In contrast to the irreversible process of adiabatic throttling, the reversible process of isenthalpic expansion ($dp < 0$) cannot be adiabatic at the same time: from Eq. (2.44),

$$dq = di - v\,dp,$$

it is clear that when $dq = 0$ (no friction in a reversible process) and $dp \neq 0$, enthalpy cannot remain constant ($di \neq 0$). But if we think of a reversible process when $dq = 0$ and $di = 0$, then, as can be seen from Eq. (2.44), the gas will simply fail to expand ($dp = 0$). In other words, the state of the gas does not change; consequently, no process takes place.

(such presentation of the formula is more convenient, since $p_2 < p_1$). It follows from Eq. (7.122a) that s_2 is always greater than s_1.

Let us find out now how the temperature of a gas or liquid changes during adiabatic throttling. Inasmuch as the process is characterized by the condition i = const, to solve this problem we must know the magnitude of the derivative $(\partial T/\partial p)_i$.

From the obvious relationship

$$\left(\frac{\partial T}{\partial p}\right)_i \left(\frac{\partial p}{\partial i}\right)_T \left(\frac{\partial i}{\partial T}\right)_p = -1 \tag{7.123}$$

and taking into account Eqs. (2.46) and (4.31), we obtain:

$$\left(\frac{\partial T}{\partial p}\right)_i = \frac{1}{c_p}\left[T\left(\frac{\partial v}{\partial T}\right)_p - v\right]. \tag{7.124}$$

The quantity $(\partial T/\partial p)_i$ is called the *differential Joule-Thomson coefficient* described by the equation

$$\alpha_i = (\partial T/\partial p)_i. \tag{7.125}$$

Generally, the value of α_i differs from zero. The change of the temperature of gases and liquids undergoing adiabatic throttling is referred to as the *Joule-Thomson effect.* The results obtained in measuring the differential coefficient (the ratio of a rather small finite temperature difference ΔT to a pressure difference across the throttle, Δp, also small) can be used to find the magnitude of α_i and, knowing the latter, plot an i-T diagram for the substance investigated and determine its heat capacity c_p, caloric functions, specific volume, etc.

The change of the temperature of a gas (liquid) undergoing adiabatic throttling at a considerable pressure drop across the throttle is called the *integral throttling effect* or the *integral Joule-Thomson coefficient* and is calculated from the relationship

$$T_2 - T_1 = \int_{p_1}^{p_2} \alpha_i \, dp, \tag{7.126}$$

where T_1 and T_2 are the temperatures of the substance throttled before and after the throttle, respectively.

The integral Joule-Thomson coefficient can reach rather great magnitudes. For instance, when water vapour undergoes adiabatic throttling from a pressure of 29 400 kPa (300 kgf/cm^2) and a temperature of 450 °C to a pressure equal to 98 kPa (1 kgf/cm^2), the temperature of the vapour drops to 180 °C (i.e. diminishes by 270 °C).

The integral Joule-Thomson coefficient can be conveniently determined from the i-T diagram plotted for the given substance, as illustrated in Fig. 7.12. If the state of the gas or liquid upstream from the throttle is known, i.e. its pressure p_1 and temperature T_1 and the pressure downstream from the throttle, p_2, is also known, then by plotting the point with parameters p_1 and T_1 on the i-T diagram (point *1*) and finding the point at which the isenthalpy line i_1 = const intersects the isobar p_2 = const, we find the temperature T_2 after the throttle.

We must bear in mind that the isenthalpy line *1-2* represented on the i-T diagram is not the line of adiabatic throttling, since only reversible processes can be plotted in the state diagrams. The isenthalpy line *1-2* is

the line of a reversible process proceeding between the same states between which an irreversible process of adiabatic throttling is realized.

What is then the sign of the differential coefficient of the Joule-Thomson effect? In other words, is adiabatic throttling of a gas (liquid) always accompanied by a drop in its temperature? To answer this question, let us analyze the relationship (7.124). Inasmuch as heat capacity c_p is always greater than zero, the sign of α_i is determined by the sign of the quantity present in the numerator of the right-hand side of Eq. (7.124), i.e.

$$\left[T\left(\frac{\partial v}{\partial T}\right)_p - v\right].$$

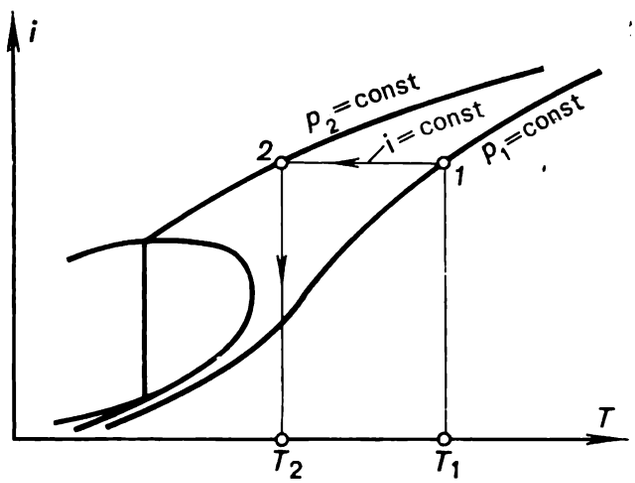

Fig. 7.12

It is clear that if

$$\left(\frac{\partial v}{\partial T}\right)_p < \frac{v}{T}, \tag{7.127}$$

then

$$\alpha_i < 0, \tag{7.128}$$

and the temperature of the substance undergoing adiabatic throttling increases. If

$$\left(\frac{\partial v}{\partial T}\right)_p > \frac{v}{T}, \tag{7.129}$$

then

$$\alpha_i > 0, \tag{7.130}$$

and the temperature of the substance undergoing adiabatic throttling decreases.

Finally, if

$$\left(\frac{\partial v}{\partial T}\right)_p = \frac{v}{T}, \tag{7.131}$$

then

$$\alpha_i = 0, \tag{7.132}$$

i.e. during adiabatic throttling the temperature of the substance involved does not change.

Inasmuch as for an ideal gas

$$\left(\frac{\partial v}{\partial T}\right)_p = \frac{v}{T},$$

an ideal gas undergoes throttling without a change of temperature. This is one of the characteristics of an ideal gas. Thus, the Joule-Thomson effect is observed only with real gases and liquids. Calculations have shown that for a gas obeying Van der Waals' equation the Joule-Thomson effect is not equal to zero.

Experience shows that for the same substance the sign of α_i happens to be different in various regions of state. The state of a gas (liquid) in which the Joule-Thomson effect is zero is called the *point of inversion* of the Joule-

Fig. 7.13

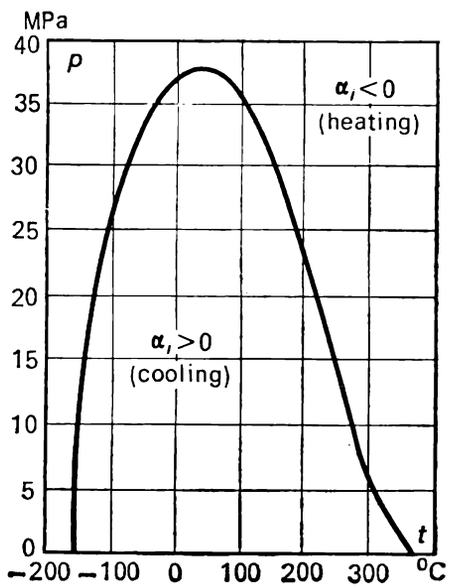

Fig. 7.14

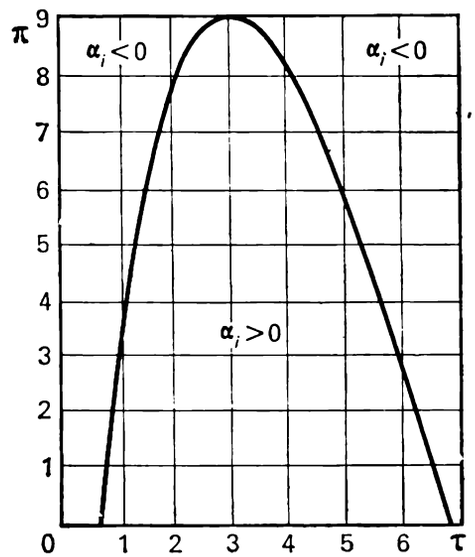

Thomson effect. The loci of all states of inversion on the state diagram plotted for a given substance is called the *curve of inversion.*

The points on the inversion curve satisfy Eq. (7.132). Making use of this condition, we can find the inversion curve with the aid of the equation of state for a given substance.

For illustration, the inversion curve for nitrogen is plotted on the p-T diagram shown in Fig. 7.13. Within the region bounded by the inversion curve $\alpha_i > 0$, i.e. the gas undergoing throttling cools. Outside of this region $\alpha_i < 0$, i.e. the temperature of the gas increases upon throttling. Similar inversion curves are plotted for other substances.

Figure 7.14 shows a correlated or generalized inversion curve plotted in reduced π- and τ-coordinates. It should be understood that like any other generalized relationship this curve is of a rather approximate nature, and the real inversion curves plotted for various substances deviate appreciably from this generalized relationship in a number of cases. However, the diagram gives a correct idea of the qualitative nature of the inversion curve. As can be seen from this diagram, the differential Joule-Thomson coefficient or α_i is positive (cooling of a gas undergoing throttling) in a wide region of states.

An analysis of the inversion curve, shown in Fig. 7.15, reveals that the isobars $p < p_{in}$ intersect the inversion curve twice (at points a and b): moving along the isobar into the high-temperature region, we pass from the region $\alpha_i < 0$ (heating of the throttled gas) to the region $\alpha_i > 0$ (cooling of the

throttled gas); then at very high temperatures, exceeding several times the critical temperature, we get again into the region $\alpha_i < 0$. At pressures $p > p_{in}$ at any temperature, $\alpha_i < 0$. The maximum point of the inversion curve is called the *critical inversion point*. Calculations show that for a Van der Waals gas the parameters of the critical inversion point are:

$$p_{in} = 9p_{cr}, \quad T_{in} = 3T_{cr}, \quad v_{in} = v_{cr}. \tag{7.133}$$

For a Van der Waals gas it is possible to calculate at what temperatures the inversion curve crosses the T-axis in the p-T diagram (Fig. 7.15).

Fig. 7.15

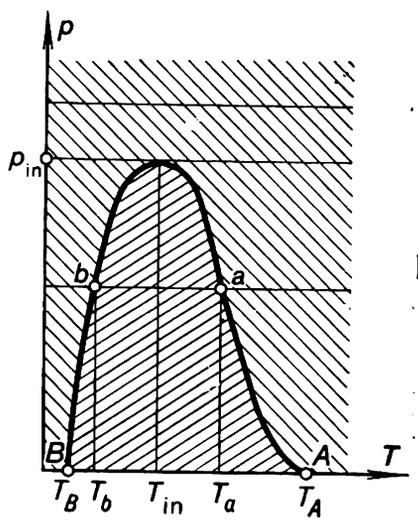

Fig. 7.16

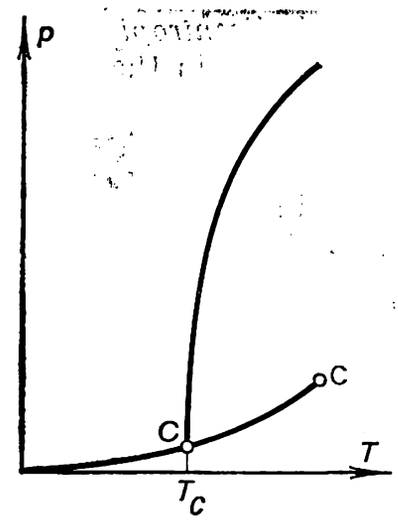

The calculations show that

$$T_A = 6.75T_{cr}, \tag{7.134}$$

$$T_B = 0.75T_{cr}. \tag{7.135}$$

The magnitude of T_A for real gases agrees well with the quantity $6.75T_{cr}$. As regards the quantity T_B (do not confuse with Boyle's temperature), its magnitude for a Van der Waals gas fails to correspond with experimental data.

The left branch of the inversion curve does not reach the p-axis in the p-T diagram, since it intersects the saturation line. The course of the inversion curve near the saturation line is depicted schematically in Fig. 7.16. As can be seen from the p-T diagram shown in Fig. 7.16, at some point C the inversion curve touches the saturation line. The temperatures at which the inversion curve approaches the saturation line are different for different substances. For instance, for water $T_C = 235$ °C.

As the isenthalpies, isentrops and other curves, plotted for wet vapour (steam) on the p-T diagram, merge with the saturation line and, consequently,

$$\left(\frac{\partial T}{\partial p}\right)_i^{\text{t.ph.}} = \frac{dT}{dp},$$

then

$$\alpha_i^{\text{t.ph.}} = \frac{dT}{dp}, \tag{7.136}$$

i.e. for a two-phase mixture $\alpha_i^{t.ph.} > 0$; wet vapour always cools upon adiabatic throttling.

Adiabatic throttling can be an effective means of cooling gases. It is understood that gas will be cooled only when its state is in the region of states for which $\alpha_i > 0$, i.e. in the region below the curve of inversion.

Since the process of reversible adiabatic, or isentropic, expansion (with external work transfer) is an effective method of cooling gases (as was mentioned in Sec. 7.4), it is interesting to compare the two methods of gas cooling. Let us find which of the two methods ensures a deeper cooling of a gas. In other words, we must compare the quantities $(\partial T/\partial p)_i$ and $(\partial T/\partial p)_s$.

The derivative $(\partial T/\partial p)_s$, which can be called the *coefficient of reversible adiabatic (isentropic) expansion* and denoted by α_s by analogy with α_i, can be presented in the following form. From relationship

$$\left(\frac{\partial T}{\partial p}\right)_s \left(\frac{\partial p}{\partial s}\right)_T \left(\frac{\partial s}{\partial T}\right)_p = -1, \tag{7.137}$$

taking into account Maxwell's relation (4.22), we obtain:

$$\alpha_s = \frac{T}{c_p}\left(\frac{\partial v}{\partial T}\right)_p. \tag{7.138}$$

By Eq. (7.124), the differential Joule-Thomson coefficient (i.e. for irreversible adiabatic expansion) is

$$\alpha_i = \frac{1}{c_p}\left[T\left(\frac{\partial v}{\partial T}\right)_p - v\right].$$

From Eqs. (7.138) and (7.124) we obtain:

$$\alpha_s - \alpha_i = \frac{v}{c_p}. \tag{7.139}$$

Inasmuch as v and c_p are always positive,

$$\alpha_s > \alpha_i. \tag{7.140}$$

Thus, the process of reversible adiabatic expansion (with external work transfer) ensures a more effective cooling of a gas or liquid from the thermodynamic viewpoint than the process of adiabatic throttling, i.e. of adiabatic irreversible expansion.

As was already mentioned, adiabatic throttling is one of the particular cases of throttling, which differ in the amount of heat added to the substance involved in the process of throttling. It is clear that if heat is added or rejected through the wall of a pipe in the course of throttling, the condition for the process to be isenthalpic, true for adiabatic throttling, is not satisfied, and the enthalpy of the gas (liquid) changes. Isothermal throttling is an interesting special case.

Isothermal throttling is the name given to the process of throttling in the course of which an amount of heat is added to the gas (liquid) undergoing throttling such that the temperature of the gas after the throttle remains equal to that in front of the throttle. Isothermal throttling is mostly practiced in experimental work. The *coefficient of isothermal throttling* (or the *isothermal throttling effect*), denoted by α_T, is determined in the following way:

$$\alpha_T = -\left(\frac{\partial i}{\partial p}\right)_T. \tag{7.141}$$

The quantity α_T characterizes the extent of the change in substance enthalpy with a drop in pressure in the course of isothermal throttling. In accordance with (4.31), Eq. (7.141) yields

$$\alpha_T = T\left(\frac{\partial v}{\partial T}\right)_p - v. \tag{7.142}$$

In conclusion it will be noted that the specific volume of a throttled substance always increases; in fact, as is known, the quantity $(\partial p/\partial v)_i$ is always negative. It can be shown easily that the quantity $(\partial p/\partial v)_T$ is also always negative. The negative values of these derivatives indicate that with a decrease in the pressure of a substance undergoing throttling ($dp < 0$) the specific volume increases ($dv > 0$).

The Joule-Thomson effect can be used to reduce practical (empirical) temperature scales to the thermodynamic temperature scale just as was carried out in Sec. 5.6 with the aid of the Clausius-Clapeyron equation, i.e. the effect can be used to establish the dependence $T = f(T^*)$, where T and T^* are temperatures on the practical and thermodynamic scales, respectively.

It is clear that the expression (7.125) for the Joule-Thomson effect can be presented in the following form:

$$\alpha_i = \left(\frac{\partial T}{\partial p}\right)_i = \left(\frac{\partial T^*}{\partial p}\right)_i \frac{dT}{dT^*}. \tag{7.143}$$

Equation (7.143) relates the true value of the derivative $(\partial T/\partial p)_i$, where T is the temperature on the thermodynamic scale, to the experimentally measured value of the Joule-Thomson coefficient $\alpha_i^* = (\partial T^*/\partial p)_i$; it is clear that in these experiments the temperature is measured with the aid of thermometers with a practical scale.

On the other hand, the Joule-Thomson coefficient α_i can be calculated with the aid of Eq. (7.124), which can be reduced to

$$\alpha_i = \frac{T\left(\frac{\partial v}{\partial T}\right)_p - v}{\left(\frac{\partial i}{\partial T}\right)_p}. \tag{7.144}$$

To calculate α_i with the aid of Eq. (7.144), in addition to T, the values of $(\partial v/\partial T)_p$, $c_p = (\partial i/\partial T)_p$ and v must be available. Specific volume v remains virtually constant when passing from the thermodynamic to the practical scale; the values of $(\partial v/\partial T)_p$ and c_p are far more affected by the difference in the temperature scales. It is clear that

$$\left(\frac{\partial v}{\partial T}\right)_p = \left(\frac{\partial v}{\partial T^*}\right)_p \frac{dT^*}{dT} \quad \text{and} \quad \left(\frac{\partial i}{\partial T}\right)_p = \left(\frac{\partial i}{\partial T^*}\right)_p \frac{dT^*}{dT}, \tag{7.145}$$

where $(\partial v/\partial T^*)_p$ and $c_p^* = (\partial i/\partial T^*)_p$ are obtained experimentally with the aid of thermometers with a practical scale. Taking into account (7.145), Eq. (7.144) becomes

$$\alpha_i = \frac{T\left(\frac{\partial v}{\partial T^*}\right)_p \frac{dT^*}{dT} - v}{c_p^* \frac{dT^*}{dT}}. \tag{7.146}$$

Equating the right-hand sides of Eqs. (7.143) and (7.146), we get:

$$\alpha_i^* \frac{dT}{dT^*} = \frac{T\left(\frac{\partial v}{\partial T^*}\right)_p \frac{dT^*}{dT} - v}{c_p^* \frac{dT^*}{dT}}, \tag{7.147}$$

whence, after simple transformations, we obtain:

$$d \ln T = \frac{\left(\frac{\partial v}{\partial T^*}\right)_p}{v + \alpha_i^* c_p^*} dT^*. \tag{7.148}$$

Integrating Eq. (7.148) and taking antilogarithms, we see that

$$T_2 = T_1 \exp \left\{ \int_{T_1^*}^{T_2^*} \frac{\left(\frac{\partial v}{\partial T^*}\right)_p}{v + \alpha_i^* c_p^*} dT^* \right\}. \tag{7.149}$$

If the thermodynamic temperature T_1 is known and the temperature on the practical scale is T_1^*, relationship (7.149) can be used to find the thermodynamic temperature T_2 corresponding to any other point on the practical temperature scale.

If at any temperature T_1 is assumed to be equal to T_1^* (the only fixed point), Eq. (7.149) permits us to determine the values of the thermodynamic temperature at any scale point.

7.7 Joule expansion (expansion into a vacuum)

Let us consider one more typical irreversible process for a real gas, an adiabatic expansion of the gas into an evacuated space without external work transfer.

Previously, in Sec. 2.4, we considered this process as applied to an ideal gas. It will be recalled that experimental studies of adiabatic expansion without external work transfer permitted Gay-Lussac and then Joule to prove that the temperature of an ideal gas does not change as a result of adiabatic expansion. This, in turn, made it possible to find out an important property of ideal gases, namely, the independence of internal energy from volume.

Let us examine the regularities governing the adiabatic expansion of a real gas into a vacuum (the *Joule expansion*).

The plan of the experiment remains as before: consider the vessel separated by a sliding partition into two parts, one of volume V_1 (this part of the vessel is filled with a gas at a temperature T_1) and the other of volume V_{vac} (this part of the vessel is evacuated). The experiment is illustrated schematically in Fig. 7.17*a*. The vessel is fitted with ideal means of heat insulation, preventing any heat exchange with the surroundings. The partition is drawn out and the gas expands into the vacuum V_{vac}; the expansion results in a drop in gas pressure and its volume becomes equal to that of the vessel: $V_2 = V_1 + V_{vac}$ (Fig. 7.17*b*).

Let us look into the changes in temperature and entropy that take place during the experiment.

It will be recalled that, as shown in Sec. 2.3, when the pressure inside a system (in this case the pressure of the gas in volume V_1) is not equal to

the pressure of the surroundings (in this case in volume V_{vac}), i.e. when a non-equilibrium process of expansion takes place, the differential of the work of expansion must be written in the form $p_s dV$, where p_s is the pressure of the surroundings. It follows that the mathematical statement of the first law of thermodynamics (2.27) for the process of non-equilibrium expansion takes the following form:

$$dQ = dU + p_s dV. \tag{7.150}$$

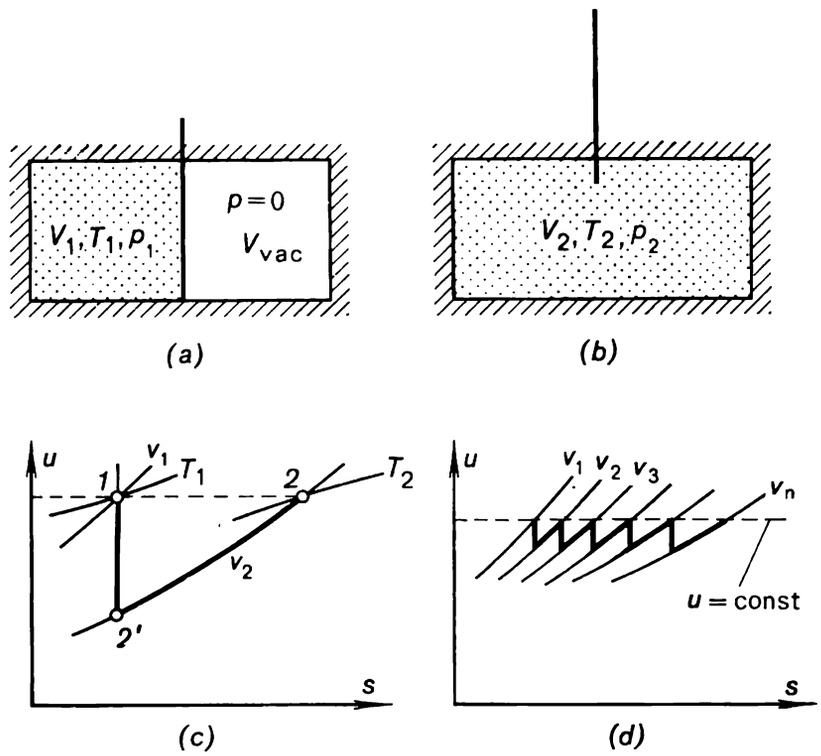

Fig. 7.17

As applied to this process of adiabatic expansion of a real gas into a vacuum ($p_s = 0$ and, consequently, $dL = p_s dV = 0$, i.e. the gas expands producing no work), we obtain from (7.150):

$$dU = 0 \tag{7.151}$$

and, consequently,

$$U = \text{const},$$

i.e. in the process of adiabatic expansion of a gas into a vacuum its internal energy remains unchanged (for an ideal gas this conclusion was previously reached in Sec. 2.4 when studying the Gay-Lussac—Joule experiment).

When expanding into a vacuum, the gas first acquires kinetic energy at the expense of internal energy. Then, as a result of complete flow stagnation, after the gas ceases to flow into the part of the vessel previously evacuated, the internal energy of the gas is restored to its initial magnitude. This process is illustrated in Fig. 7.17*c*, where in the process *1-2'* the internal energy decreases; resulting in the appearance of the kinetic energy of working-medium displacement, and in the process represented by line *2'-2* the internal energy is restored as a result of stagnation. In this process $u_1 = u_2$, i.e. at the end of the process the internal energy of the gas is equal to that at the

initiation of gas expansion into the vacuum, although during the expansion process proper, in accordance with the foregoing, the internal energy of the gas first decreases, then increases to its initial magnitude. It thus becomes clear that Eq. (7.151) is somewhat conditional. If we visualize, however, a series of similar elementary processes, i.e. processes during which the working medium fills a great number of successively connected evacuated elementary vessels, then the process shall tend to $dU = 0$ (Fig. 7.17*d*).

The change in gas temperature due to the change in volume during the process, characterized by U = const, is determined from the following obvious relationship:

$$T_2(U, V_2) - T_1(U, V_1) = \int_{V_1}^{V_2} \left(\frac{\partial T}{\partial V}\right)_U dV, \tag{7.152}$$

or, when passing to specific quantities,

$$T_2(u, v_2) - T_1(u, v_1) = \int_{v_1}^{v_2} \left(\frac{\partial T}{\partial v}\right)_u dv. \tag{7.152a}$$

The partial derivative $(\partial T/\partial v)_u$ present in relationship (7.152a) can be transformed in the following manner:

$$\left(\frac{\partial T}{\partial v}\right)_u = -\left(\frac{\partial T}{\partial u}\right)_v \left(\frac{\partial u}{\partial v}\right)_T. \tag{7.153}$$

Taking into account Eqs. (2.31) and (4.25), we find that

$$\left(\frac{\partial T}{\partial v}\right)_u = \frac{p - T\left(\frac{\partial p}{\partial T}\right)_v}{c_v}. \tag{7.153a}$$

Substituting this value of $(\partial T/\partial v)_u$ in Eq. (7.152a), we obtain:

$$T_2(u, v_2) - T_1(u, v_1) = \int_{v_1}^{v_2} \frac{p - T\left(\frac{\partial p}{\partial T}\right)_v}{c_v} dv. \tag{7.154}$$

This relationship indicates that in the general case of adiabatic expansion of a gas into a vacuum, the temperature of the expansing gas decreases. Since for a real substance the following relations $\left(\frac{\partial u}{\partial v}\right)_T = T\left(\frac{\partial p}{\partial T}\right)_v - p > 0$ and $c_v > 0$ are always true, it follows that in this process

$$T_2 < T_1.$$

For an ideal gas, as was shown in Sec. 2.4, adiabatic expansion into a vacuum is not accompanied by a change in temperature. Indeed, since for an ideal gas, in accordance with Eq. (2.34),

$$\left(\frac{\partial u}{\partial v}\right)_T^{\text{ideal}} = 0,$$

we get, as can be seen from Eq. (7.153),

$$\left(\frac{\partial T}{\partial v}\right)_u^{\text{ideal}} = 0.$$

Knowing the values of v_2 and T_2, we can easily find the pressure of the gas in the vessel upon expansion to the pressure p_2 (with the aid of state diagrams or tables of thermodynamic properties).

The change in the entropy of the gas undergoing this process is determined from the obvious relationship

$$s_2(u, v_2) - s_1(u, v_1) = \int_{v_1}^{v_2} \left(\frac{\partial s}{\partial v}\right)_u dv. \tag{7.155}$$

Taking Eq. (4.41) into account,

$$\left(\frac{\partial s}{\partial v}\right)_u = \frac{p}{T},$$

we obtain:

$$s_2(u, v_2) - s_1(u, v_1) = \int_{v_1}^{v_2} \frac{p}{T} dv. \tag{7.156}$$

The integral present in Eq. (7.156) is calculated with the aid of the tables of thermodynamic properties of gases (p/T is plotted as a function of v for u = const, and the relation $p/T = f(v)$ is integrated from v_1 to v_2).

Since the integral present in the right-hand side of Eq. (7.156) is always positive, s_2 is always greater than s_1, i.e. in the typically irreversible Joule process entropy increases.

Substituting the value of p/T from Clapeyron's equation,

$$\frac{p}{T} = \frac{R}{v},$$

in Eq. (7.156), we obtain for an ideal gas:

$$s_2(u, v_2) - s_1(u, v_1) = R \ln \frac{v_2}{v_1}. \tag{7.157}$$

Thus, for G kg of gas,

$$S_2 - S_1 = GR \ln \frac{V_2}{V_1}.$$

7.8 Mixing

In various devices we often have to mix different fluids (gases and liquids) or different amounts of the same fluid, with the components of the mixture at different parameters (temperature, volume, pressure).

The problem of mixing is usually to determine the parameters, or properties, of state of the mixture based on the known properties of state of the mixture components.

The solution of this problem differs depending on the conditions in which the mixing is occurring. Various methods of mixing are considered below.

Here we shall restrict ourselves to a process involving one and the same gas or liquid, with the amounts of the substance mixed having different parameters. Since this book does not treat problems pertaining to the thermodynamics of mixtures, processes involving the mixing of different fluids (gases and liquids) will not be considered.

Mixing will be considered to be accomplished without any addition or removal of heat from the substances in the course of mixing, i.e. mixing will

be considered as proceeding adiabatically. Mixing with an addition of heat can be visualized as proceeding in two stages: mixing without addition of heat, and then addition of heat to the mixture obtained.

Mixing in a constant volume

Consider the process of mixing in a vessel of constant volume V. Let the vessel be separated by a partition (diaphragm) into two compartments, one of them containing a fluid (gas or liquid) with parameters p_1, v_1, T_1, u_1 and the other containing the same fluid with parameters p_2, v_2, T_2, u_2 (Fig. 7.18*a*).

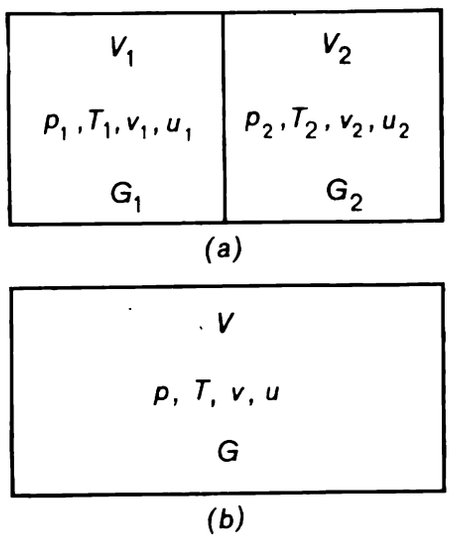

Fig. 7.18

The mass of gas filling one compartment and the volume of this compartment are denoted by G_1 and V_1, respectively, and G_2, V_2 are used for the other compartment. It is clear that if the diaphragm separating the two compartments is removed, the two parts of this gas will mix; as a result, the pressure, temperature and density of the gas will even out over the entire volume of the vessel (Fig. 7.18*b*). We shall denote the properties of state of the gas upon mixing by p, v, T, u.

Since the process of mixing was assumed to take place in a perfectly thermally insulated vessel with constant volume, it is clear that we have here an isolated thermodynamic system, similar to the system considered in Chapter 5. It will be recalled that in such a system

$$V = V_1 + V_2 = \text{const},$$
$$U = U_1 + U_2 = \text{const}.$$

Upon mixing, the mass of gas is

$$G = G_1 + G_2.$$

It follows from Eqs. (5.79) and (5.80) that

$$u_1G_1 + u_2G_2 = u\,(G_1 + G_2). \tag{7.158}$$

The internal energy of the gas upon mixing is determined thus:

$$u = \frac{u_1G_1 + u_2G_2}{G_1 + G_2}. \tag{7.159}$$

Further, by analogy with the foregoing, it follows from Eqs. (5.78) and (5.79) that

$$v = \frac{v_1 G_1 + v_2 G_2}{G_1 + G_2}. \tag{7.160}$$

This process of mixing is irreversible. Indeed, in order to separate again the gas in the vessel into two parts possessing essentially different temperatures and pressures, external work must be spent, whereas the process of mixing (the evening out of pressures and temperatures) proceeds spontaneously. Just as in any other irreversible process, in this mixing process entropy increases. This conclusion is also evident from other considerations: since, as was shown in Chapter 3, processes developing in an isolated system lead to an increase in system entropy, it is clear that in this process of mixing, the entropy of the gas increases.

The other properties of the gas mixture (p and T) cannot be determined analytically for real fluids (gases and liquids) in terms of the properties of the first and second parts of the given system (i.e. the properties of the mixture components). These properties can be determined from a u-v diagram, plotting isobars or isotherms, or from a u-T diagram, showing isochors and isobars. Having determined u and v of the gas mixture with the aid of formulas (7.159) and (7.160), we can find the values of p, T and s from the diagrams of state.

The values of T and v of the gas mixture can be expressed directly in terms of the known properties of state of the mixture components only for an ideal gas.

For an ideal gas the temperature of the gas mixture T is determined in the following way. Since the heat capacity of an ideal gas is constant,

$$u_1 = c_v T_1, \quad u_2 = c_v T_2, \quad u = c_v T \tag{7.161}$$

(for ideal gases whose heat capacity changes with temperature, the average heat capacity c_v^{av} will be present in the above relations)*.

Taking the foregoing into account, from Eq. (7.158), we get:

$$T = \frac{G_1 T_1 + G_2 T_2}{G_1 + G_2}. \tag{7.162}$$

The pressure p of the gas mixture is found from Clapeyron's equation

$$p = \frac{(G_1 + G_2) RT}{V}, \tag{7.163}$$

where T is the gas temperature after mixing, found from Eq. (7.162); V the volume of the vessel; $(G_1 + G_2)$ the total mass of gas; and R the gas constant of mixture determined from Eq. (1.59).

Knowing the temperature T and pressure p of this ideal gas mixture, we can determine its entropy with the aid of relationship (6.107).

---

* In this case, as can be seen from Eq. (7.161), the internal energy of the ideal gas is measured from the fixed point 0 K. It must be emphasized, however, that the selection of the reference point in no way affects the results obtained in calculating the magnitude of T.

Mixing in a flow

Another important form of mixing is that which occurs when two streams of fluid meet to form a common flow. Mixing of this kind can be represented as follows (Fig. 7.19). Pipeline A delivers into a mixing chamber a fluid (gas or liquid) whose properties of state are p_1, v_1, T_1, i_1, and pipeline B delivers a fluid with properties of state p_2, v_2, T_2, i_2. The rate of fluid flow through pipeline A is G_1 and through pipeline B it is G_2. At the inlet of the mixing chamber the two streams of fluid are throttled so that the pressure p in the mixing chamber is inferior to p_1 and p_2 (if p was higher than one of the two pressures, for instance, $p > p_1$, the fluid would flow from the mixing chamber into pipeline A).

Fig. 7.19

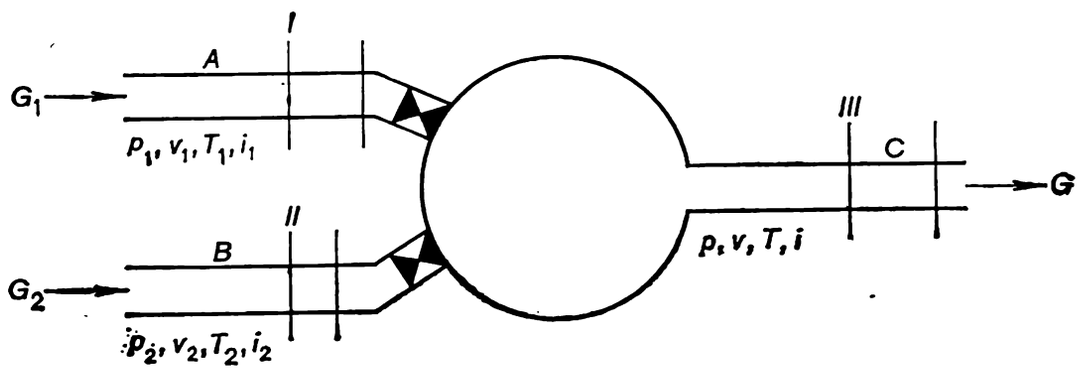

It should be emphasized that a different pressure p can be maintained in the mixing chamber, depending on the opening of the valves fitted in pipelines A and B. This process of mixing in a flow differs essentially from the process of mixing in a vessel previously considered, where the pressure of the gas mixture was determined unambiguously by the initial properties of the mixture components.

From the mixing chamber the gas mixture with parameters p, v, T, i is discharged through pipeline C, the rate of mixture flow through the latter being denoted by G. It is clear that

$$G = G_1 + G_2.$$

Just as before, it is assumed that the process of mixing proceeds adiabatically, meaning that the mixing chamber is perfectly thermally insulated.

The process of mixing of two streams meeting to form a common flow is naturally an irreversible process. In this process an additional irreversibility appears when the velocities of the first and second streams of fluid differ. However, for most technically important mixing processes the velocities of the gas streams are sufficiently low, so that the kinetic energy of these flows (streams) can be ignored.

The chief regularities governing the process of mixing of two streams in a common flow will be elucidated, according to the method employed in analyzing the process of throttling: consider in the pipelines A, B and C sections of flows (I, II and III in Fig. 7.19).

Since the gas is in motion in the pipelines, it is evident that the considered sections (or weightless pistons) I, II and III move along the pipes. Let

us denote the cross-sectional areas of the pipelines A, B and C (i.e. the cross-sectional areas of pistons I, II and III) by Σ_1, Σ_2 and Σ_3, respectively.

In a certain time interval piston I will move through distance l_1, piston II, through distance l_2, and piston III, through distance l_3. To displace piston I through the distance l_1 work must be performed, amounting to

$$L_1 = p_1 l_1 \Sigma_1. \tag{7.164}$$

We shall denote

$$V_1 = l_1 \Sigma_1, \tag{7.165}$$

where V_1 is the volume of gas displaced by piston I during the given time interval.

Inasmuch as

$$V_1 = v_1 G_1, \tag{7.166}$$

we have:

$$L_1 = p_1 v_1 G_1. \tag{7.167}$$

Similarly, the work done to displace piston II can be shown to be equal to

$$L_2 = p_2 v_2 G_2, \tag{7.168}$$

and the work performed by the moving piston III is

$$L_3 = pvG. \tag{7.169}$$

The total work performed is equal to

$$L = L_3 - (L_1 + L_2).$$

Taking into account Eqs. (7.167) to (7.169), we get:

$$L = pvG - p_1 v_1 G_1 - p_2 v_2 G_2. \tag{7.170}$$

On the other hand, it is known that in an adiabatic process work can be done only at the expense of internal energy of the system:

$$L = uG - (u_1 G_1 + u_2 G_2). \tag{7.171}$$

Equating the right-hand sides of Eqs. (7.170) and (7.171), we obtain:

$$(u + pv)\, G = (u_1 + p_1 v_1)\, G_1 + (u_2 + p_2 v_2)\, G_2, \tag{7.172}$$

or

$$iG = i_1 G_1 + i_2 G_2. \tag{7.173}$$

It follows that the enthalpy of a mixture resulting from mixing two streams meeting to form a common flow is determined in the following manner:

$$i = \frac{i_1 G_1 + i_2 G_2}{G}. \tag{7.174}$$

Knowing the enthalpy i and the pressure p of a gas mixture, the other properties of the mixture (T, v, s, etc.) can be found from the i-T, i-p and i-s state diagrams plotted for this mixture.

If a mixing process involves two streams of an ideal gas possessing various properties of state, the values of v and T can be calculated in terms of the known properties of the mixing streams.

Since for an ideal gas, whose heat capacity is constant,

$$i_1 = c_p T_1, \quad i_2 = c_p T_2, \quad i = c_p T \tag{7.175}$$

[for an ideal gas whose heat capacity depends on temperature the average heat capacity c_p^{av} will be present in relations (7.175)],* taking Eq. (7.175) into account, from formula (7.174) we get:

$$T = \frac{T_1G_1 + T_2G_2}{G_1 + G_2}. \tag{7.176}$$

Thus, knowing the gas temperature T and the pressure p in the mixing chamber, we can use Clapeyron's equation to calculate the specific volume of the gas mixture:

$$v = \frac{RT}{p}, \tag{7.177}$$

where R is the gas constant of a mixture, determined from equation (1.59).

The entropy of an ideal gas is determined unambiguously by its temperature and pressure.

Mixing in filling a vessel

The third important kind of mixing is mixing while filling a vessel during which a certain amount of fluid (gas, liquid) with properties p_2, v_2, T_2 is introduced into a vessel of constant volume V_1 already containing the same fluid with state properties p_1, v_1, T_1. The amounts of the fluid contained and introduced in the vessel are denoted by G_1 and G_2, respectively (see Fig. 7.20). It is clear that the pressure p_2 must exceed the pressure p_1.

As before, we are considering adiabatic mixing.

We shall denote the cross-sectional area of the pipeline through which gas is delivered to the vessel by Σ, the volume occupied by G_2 kg of the gas at pressure p_2 and temperature T_2, by V_2, and the length of the pipeline occupied by the mass of gas introduced into the vessel, by l_2. Reasoning in the same way as in the preceding case, we find that the work which should be done to introduce the gas filling the pipeline into the vessel is

$$L_2 = p_2 l_2 \Sigma = p_2 V_2 = p_2 v_2 G_2. \tag{7.178}$$

Inasmuch as the volume of the vessel is constant, it is clear that neither the gas filling the vessel prior to mixing nor the gas filling the vessel after the mixing, whose pressure rises compared with the pressure p_1, produce any work.

Thus, in this process of mixing the only work produced is the work done on the gas (liquid) filling the vessel before the mixing:

$$L = -L_2 = -p_2 v_2 G_2. \tag{7.179}$$

On the other hand, just as in any other adiabatic process, in this process work can be performed only at the expense of the internal energy of the system:

$$L = (u_1G_1 + u_2G_2) - uG, \tag{7.180}$$

where u_1, u_2 and u are the internal energies of the gas in the vessel prior to mixing, of the gas filling the pipeline and of the gas mixture; G is the mass of

* Enthalpy is measured here from 0 K.

the mixture. It is clear that

$$G = G_1 + G_2.$$

Equating the right-hand sides of Eqs. (7.179) and (7.180), we obtain:

$$uG = u_1G_1 + (u_2 + p_2v_2)\,G_2, \tag{7.181}$$

or

$$uG = u_1G_1 + i_2G_2. \tag{7.182}$$

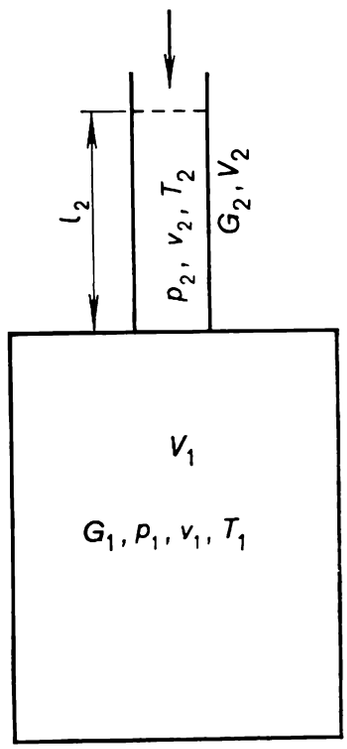

Fig. 7.20

Thus,

$$u = \frac{u_1G_1 + i_2G_2}{G_1 + G_2}. \tag{7.183}$$

Inasmuch as the volume of the vessel V_1 and the mass of the mixture $(G_1 + G_2)$ are known, it is easy to determine the specific volume of the mixture

$$v = \frac{V_1}{G_1 + G_2}. \tag{7.184}$$

Knowing u and v, the other parameters of the mixture can be easily determined with the aid of the state diagrams.

Following the method applied to other kinds of mixing, we can obtain for ideal gases a calculation formula for the temperature T and pressure p of a gas mixture, based on the known p_1, T_1, p_2 and T_2.

Since for an ideal gas (heat capacity is assumed to be independent of temperature)

$$u_1 = c_vT_1, \quad i_2 = c_pT_2, \quad u = c_vT, \tag{7.185}$$

from Eq. (7.182) we get:

$$T = \frac{T_1G_1 + kT_2G_2}{G_1 + G_2}, \tag{7.186}$$

where k is the isentropic exponent for an ideal gas, determined from Eq. (7.55).

The pressure of the gas mixture p is determined from Clapeyron's equation

$$p = \frac{(G_1 + G_2)\, RT}{V_1}. \tag{7.187}$$

Knowing T and p, the entropy of this ideal gas can be easily found.

7.9 Compression processes

A *compressor* is a machine used to compress gases. Various types of compressors find wide application in the most diversified fields of engineering.

Fig. 7.21

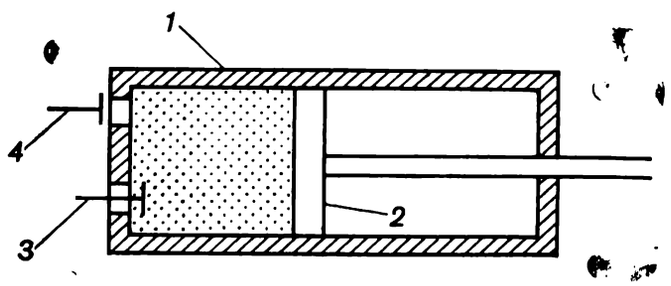

Compressors are subdivided according to design features into two groups: *positive-displacement compressors* (sometimes referred to as *static compression machines*) and *vane compressors* (also known as *dynamic compression machines*).

Positive-displacement compressors are divided, in turn, into two types: reciprocating (piston) and rotary compressors.

The principle of operation of a *reciprocating*, or *piston*, *compressor* is as follows (Fig. 7.21): piston *2* reciprocates inside cylinder *1*. As the piston travels from left to right, the fluid is drawn in (with valve *3* open) at a virtually constant pressure (if atmospheric air is compressed in the compressor, in particular, during the intake stroke air pressure in the cylinder is somewhat below atmospheric). After the piston reaches the extreme right position, the intake stroke terminates, valve *3* closes and the piston begins its return stroke, from right to left. Gas pressure in the cylinder rises. When gas pressure reaches a value somewhat exceeding the pressure in the vessel, or receiver, into which compressed gas is delivered, valve *4* opens and the compressed air flows into that vessel. Having reached its extreme left position, the piston begins to move from left to right and the compression cycle repeats.

The piston is imparted reciprocating motion through a crank gear from an external supply source of work (electric motor, internal-combustion engine, etc.).

In a *rotary compressor* a rotor plays the role of the piston. One kind of rotary compressors, the sliding *vane compressor*, is illustrated schematically in Fig. 7.22. Casing *1* of the compressor accommodates the eccentrically mounted rotor *2*. Since the rotor is eccentric to its casing, rotation causes vanes *3* to move in and out of their slots in the rotor, a centrifugal force holding the vanes against the casing. The gas is drawn into the casing of the

compressor from a low-pressure vessel through intake connection pipe *4*. The portion of the gas confined between two adjacent vanes is compressed, as can be seen from Fig. 7.22; the volume of this gas diminishes as the rotor rotates, since the rotor is eccentric to the casing. The compressed gas is discharged into the discharge connection pipe *5*. As can be seen from this schematic illustration, the principle of operation of a rotary compressor is similar to that of a reciprocating compressor; in both cases the gas is compressed due to a decrease of the gas confining volume.

Vane compressors realize a qualitatively different principle of operation and are divided into two types, centrifugal and axial.

Fig. 7.22

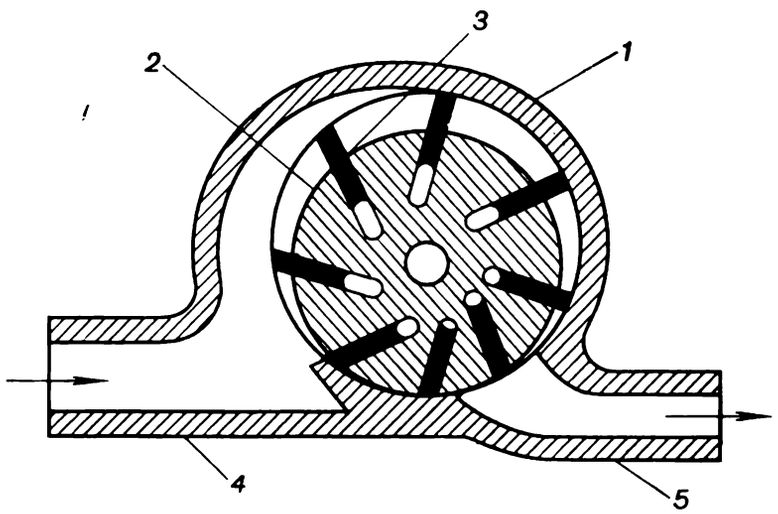

The principle of operation of vane compressors is clear from the schematic diagram of a centrifugal compressor shown in Fig. 7.23. Shaft *1* carries disc *2* fitted with moving vanes. The shaft and the disc rotate, and the gas drawn through the intake connection (at the left in Fig. 7.23) and moved into the clearances between the vanes is entrapped by the latter and acquires a high velocity; the rotating disc imparts a high kinetic energy to the gas. Possessing a high velocity, the gas then gets into diffuser *3* whose vanes are fixed in the stationary casing *4* of the compressor. In the diffuser gas velocity diminishes and, due to deceleration of the gas, its kinetic energy converts into the potential energy of pressure. The high pressure gas is discharged through the discharge, or delivery, connection pipe.

In the *axial compressor* the gas moves along the axis of the machine and is compressed in a number of stages, each consisting of an impeller and guide vanes.

Notwithstanding the great difference in the design features of different compressors, their thermodynamic principles of operation are similar.

First, we shall consider the compression cycle of a reciprocating compressor. It is convenient to analyze the compression cycle in a reciprocating compressor with the aid of the so-called *indicator diagram*, which shows the dependence of pressure in the compressor cylinder on the magnitude of the variable volume of gas in the cylinder. In other words, the diagram presents cylinder pressure as a function of the piston stroke (Fig. 7.24). The indicator diagram is drawn by a special instrument, the *dynamometric indicator* attached to the compressor.

Point *1* corresponds to the position of the piston in the cylinder in which the entire compressor is filled with low-pressure gas (the piston is in its extreme right position), with the volume of the gas being equal to V_1. Curve *1-2* cor-

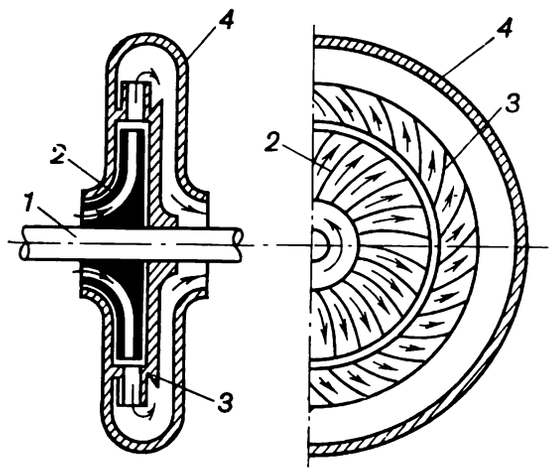

Fig. 7.23

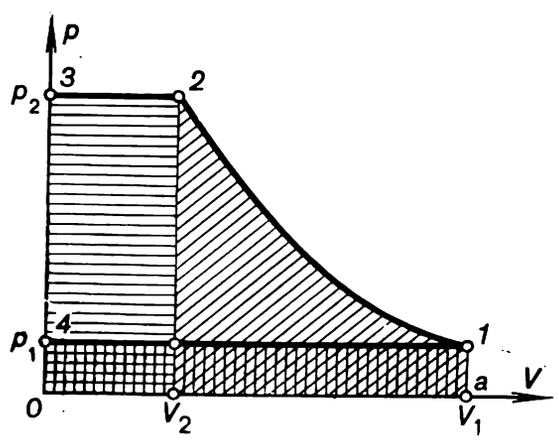

Fig. 7.24

responds to compression of the gas in the cylinder from pressure p_1 to pressure p_2 with closed intake and discharge valves. At point *2* the compression stroke terminates, and the gas is compressed to the pressure required, p_2. We shall denote the volume of gas at the end of the compression stroke (point *2*) by V_2. Inasmuch as both intake and discharge valves remain closed during the compression stroke, the amount of gas undergoing compression does not change. Point *2* corresponds to the moment the discharge valve opens, and line *2-3* represents the discharge of the gas from the cylinder into a high-pressure vessel (receiver). In the process represented by line *2-3* the amount of gas in the cylinder decreases. Point *4* corresponds to the opening of the intake valve and line *4-1* represents the process of drawing gas into the cylinder from a low-pressure cylinder, at a pressure p_1. In the process represented by line *4-1* the amount of gas in the cylinder increases from zero to the amount ensuring complete filling of the cylinder at point *1*.

The indicator diagram should not be confused with the p-V diagram: the latter is plotted for a constant amount of substance, while the indicator

diagram, as can be seen, represents processes in the cylinder containing a variable amount of gas*.

Let us now pass to the major problem in the thermodynamic analysis of the process of compression by determining the amount of work spent to compress the gas. This amount during the process represented by line *1-2* is determined from the relationship

$$L_{12} = \int_{V_1}^{V_2} p\,dV. \tag{7.188}$$

The quantity L_{12} is always negative, since the work is performed on the gas ($V_1 > V_2$ and consequently $L_{12} < 0$). On the indicator diagram (Fig. 7.24) the quantity L_{12} is represented by the area below the curve *1-2* (slanted shading).

The work performed on the compressed gas in the course of the discharge stroke during which the gas is displaced from the cylinder into the high-pressure vessel (process represented by line *2-3*) is calculated by means of a similar relationship

$$L_{23} = \int_{V_2}^{V_3} p\,dV.$$

Since during this process the pressure p_2 remains constant if p_2 is taken out of the integral sign, we obtain:

$$L_{23} = p_2 (V_3 - V_2).$$

The volume of gas in the cylinder during the discharge stroke V_3 is zero**. Consequently,

$$L_{23} = -p_2 V_2. \tag{7.189}$$

It is obvious that the quantity L_{23} is negative, since in the process represented by line *2-3* work is done on the gas. In the indicator diagram the work L_{23} is represented by the rectangular area below the line *2-3* (horizontal shading).

Point *4* on the indicator diagram corresponds to the beginning of the admission of low-pressure gas. Since the pressure in the cylinder changes from p_2 (valve *4* closed) to p_1 (valve *3* open), as can be seen from the diagram, without a change in volume ($V_3 = V_4 = 0$), no work is performed during the process represented by line *3-4*:

$$L_{34} = 0. \tag{7.190}$$

Finally, the work performed in the compressor cylinder during the induction stroke, represented by line *4-1*, is equal to:

$$L_{41} = \int_{V_4}^{V_1} p\,dV = p_1 V_1. \tag{7.191}$$

---

* Only the part of the indicator diagram which corresponds to the process with a constant amount of substance, i.e. the curve *1-2*, possesses the properties of the p-V diagram.

** This does not account for the so-called *clearance*, or the volume formed between the cylinder head and the extreme left piston position (left dead centre). The clearance will be shown to diminish the amount of gas admitted during the induction stroke.

Since the expanding gas performs (transfers) work, the quantity L_{41} is positive. On the indicator diagram the work L_{41} is represented by the area below the straight line *4-1* (vertical shading).

If we sum the quantities L_{12}, L_{23}, L_{34} and L_{41}, we obtain from Eqs. (7.188) to (7.191) the amount of work performed during the cycle *1-2-3-4-1*:

$$L = p_1V_1 - p_2V_2 + \int_{V_1}^{V_2} p\,dV. \tag{7.192}$$

Transforming the quantity $p\,dV$ as follows:

$$p\,dV = d(pV) - V\,dp, \tag{7.193}$$

we can transform the integral in the right-hand side of Eq. (7.192) in the following way:

$$\int_{V_1}^{V_2} p\,dV = (p_2V_2 - p_1V_1) - \int_{p_1}^{p_2} V\,dp. \tag{7.194}$$

Substituting Eq. (7.194) into Eq. (7.192), we obtain the work performed in a reciprocating compressor:

$$L = -\int_{p_1}^{p_2} V\,dp. \tag{7.195}$$

As can be seen from the indicator diagram, the work L is represented by the area *1-2-3-4-1*. The quantity L is negative, since in order to compress the gas in the compressor work taken from an external source must be expended.

The quantity L is called the *mechanical work* or the *work input per cycle*. As can be seen, the work input per cycle differs essentially from L_{12}, which is equal to the work done on the gas undergoing compression in the machine.

If we denote the mass of the gas compressed in the machine per cycle by G, then, taking into account the fact that $V = vG$ and that the quantity G remains constant during the compression stroke, from Eq. (7.195), we find that the work input per unit mass of gas is

$$l = -\int_{p_1}^{p_2} v\,dp. \tag{7.195a}$$

Attempts should be made to operate compressors so that the work input per cycle, spent to compress the gas from pressure p_1 to pressure p_2, is as small as possible and the temperature of the compressed gas is not too high, at any rate lower than the ignition temperature of the oil used as a lubricant in the machine.

It is expedient to consider three alternative processes of compression: adiabatic, isothermal and polytropic compression, the polytropic curve running in between the adiabat and isotherm.

If compression occurs in the compressor sufficiently rapidly, and the compressor cylinder is properly thermally insulated, such a process can be considered adiabatic with a good approximation.

However, if we assume the compressor cylinder to be placed in a thermostat in which a temperature T_1 is maintained (the temperature of the gas at the beginning of the compression stroke, point *1*) and ideal heat transfer is

ensured between the gas in the cylinder and the thermostat, then the heat released during compression will be rejected into the thermostat and the process of compression will follow the isotherm T_1 = const.

As was shown in Sec. 7.5, on the p-V diagram the isotherm is flatter than the adiabat (Fig. 7.8). It follows that in the indicator diagram of a compressor the line representing isothermal compression, *1-2a* (Fig. 7.25), is flatter than the line *1-2b* representing adiabatic compression. Consequently, in accordance with Eq. (7.195), the work input per cycle involving isothermal compression is smaller than the work input per cycle with adiabatic compression (area *1-2a-3-4-1* is smaller than area *1-2b-3-4-1*). Thus, isothermal compression

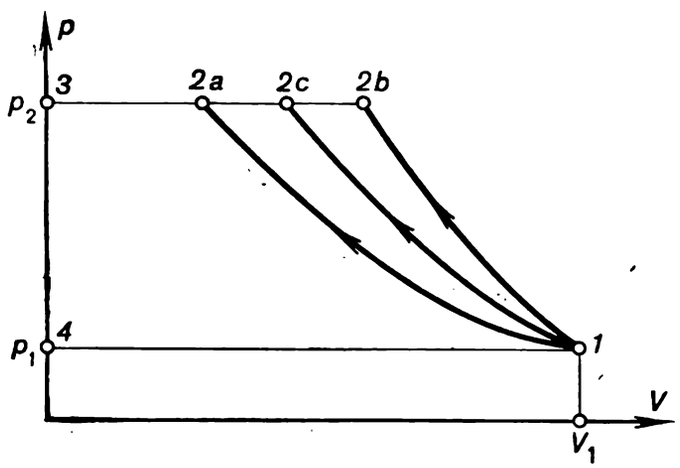

Fig. 7.25

is more expedient from the viewpoint of power consumption. In addition, isothermal compression best meets the second condition of a lower temperature of the gas at the end of the compression stroke; in the event of isothermal compression $T_2 = T_1$.

In practice, a water jacket enveloping the walls of the compressor cylinder replaces this thermostat, ensuring isothermal compression. The water, to which the cylinder walls are exposed, reduces the temperature of the gas undergoing compression in the machine. Since the rate of heat transfer is finite and compression is quickly accomplished in the compressor, the real process of compression in a water-cooled cylinder is never isothermal and is represented on the p-V diagram by a polytropic line, arranged between the isotherm and adiabat (the polytropic line *1-2c* in Fig. 7.25); it is clear that the exponent of this polytropic curve $1 < n < k$. (Strictly speaking, the polytropic exponents of real curves representing the compression of gas in compressors changes along the curve, but to facilitate analysis we can assume as a first approximation the exponent n to be constant for the entire compression curve.)

The work input per compression cycle is calculated, as was mentioned above, with the aid of Eq. (7.195). The integral in the right-hand side of Eq. (7.195) can be calculated most exactly by the method of numerical integration of a real indicator diagram. However, for many important practical applications, when gas pressure does not exceed 2000 kPa (20 kgf/cm^2), the compressed gas can be assumed to be an ideal gas obeying Clapeyron's equation, with an accuracy quite suitable for engineering estimates.

From the equation of a polytrope,

$$pv^n = p_1 v_1^n,$$

we obtain

$$v = \frac{p_1^{1/n}}{p^{1/n}} v_1. \tag{7.196}$$

Substituting the above expression for v in Eq. (7.195a) and integrating, we obtain:

$$l = -\frac{n}{n-1} p_1 v_1 \left[\left(\frac{p_2}{p_1} \right)^{\frac{n-1}{n}} - 1 \right]. \tag{7.197}$$

For an ideal gas, taking into account Eq. (1.23), Eq. (7.197) can be written in the following form:

$$l = -\frac{n}{n-1} RT_1 \left[\left(\frac{p_2}{p_1} \right)^{\frac{n-1}{n}} - 1 \right]. \tag{7.198}$$

The amount of heat removed from 1 kg of an ideal gas undergoing compression can be calculated with the aid of the previously derived Eq. (7.94):

$$q_{12} = c_v \frac{k-n}{n-1} (T_1 - T_2).$$

Inasmuch as $T_1 < T_2$, the quantity q_{12} is negative, clear since q_{12} is the heat removed from the gas.

The pressures and specific volumes of the gas at the beginning and end of compression are interrelated by the ordinary equation of a polytrope

$$\frac{p_2}{p_1} = \left(\frac{v_1}{v_2} \right)^n, \tag{7.199}$$

and the temperature of the gas at the beginning and end of compression, by the already known Eq. (7.80)

$$\frac{T_2}{T_1} = \left(\frac{p_2}{p_1} \right)^{\frac{n-1}{n}}.$$

Taking the above relationship into account, Eq. (7.94) for the quantity q_{12} can be transformed as follows:

$$q_{12} = -c_v T_1 \frac{k-n}{n-1} \left[\left(\frac{p_2}{p_1} \right)^{\frac{n-1}{n}} - 1 \right]. \tag{7.200}$$

For the purpose of comparative analysis it is often expedient to determine the characteristics of the compressor in which adiabatic compression takes place. In this case, Eqs. (7.197) and (7.198), derived for a compressor affecting polytropic compression, naturally preserve their form, but the polytropic exponent n is replaced by the adiabatic exponent k.

It is interesting to point out that the work input per cycle l for a compressor can be determined somewhat differently.

In accordance with the first law of thermodynamics expressed by Eq. (2.44)

$$dq = di - v\,dp,$$

for the adiabatic process ($dq = 0$)

$$v\,dp = di.$$

Substituting the above relationship into Eq. (7.195a), we can see that for adiabatic compression

$$l_{ad} = -(i_2 - i_1), \tag{7.201}$$

where i_2 and i_1 are the enthalpies of the gas at the beginning and end of compression,* respectively (the minus sign before the parentheses indicates that the work is done on the gas).

But if during compression heat is removed from the gas, it follows from Eqs. (2.52) and (7.195a) that

$$l = -(i_2 - i_1 - q_{12}). \tag{7.202}$$

As can be seen from this relationship, the absolute value of the work input per cycle l will be smaller than l_{ad} by the value of q_{12} (this quantity is negative, since heat is being removed from the gas).

From this relationship it is clear that the more heat is removed from the gas undergoing compression the smaller is the amount of work spent to compress the gas.

One important fact will be noted. Equations (7.197) and (7.198) for work l and Eq. (7.200) for the heat involved, q_{12}, were derived for a reversible process of gas compression [Eq. (7.197) is applicable to real gases, and Eq. (7.198) only to ideal gases]. Meanwhile, an actual process of compression is accompanied by inevitable losses of energy due to friction, larger or smaller depending on the properties of a given gas and the design of a particular compressor, converting into heat (denoted by q_{fr}). It follows from this that in a real machine in which a gas is compressed from pressure p_1 to pressure p_2, the work input per cycle will be greater than the work input determined from Eq. (7.197) by the amount of work required to overcome friction in the compressor (l_{fr}). It is clear that all this work will convert into heat ($l_{fr} = q_{fr}$), which must be removed from the gas.

For a gas undergoing compression in a real compressor (in the presence of friction) Eq. (7.202) must be written in the following form:

$$l_{real} = -(i_2 - i_1 - q_{12} - q_{fr}), \tag{7.203}$$

where

$$l_{real} = l + l_f \tag{7.204}$$

is the sum of the work input per cycle and the work spent to overcome friction.

The difference between the entropies of the gas undergoing compression at the beginning and end of compression, $s_2 - s_1$, is determined with the aid of the previously derived Eq. (7.105) for the polytropic process:

$$s_2 - s_1 = c_n \ln \frac{T_2}{T_1},$$

where c_n is the polytropic heat capacity (constant for a given process), determined for an ideal gas from Eq. (7.101).

Inasmuch as in the process of polytropic compression with a polytropic exponent, $1 < n < k$, we have T_2 always greater than T_1 ($T_2 > T_1$), and the

* It will be noted that Eq. (7.201) is true both for real and ideal gases.

heat capacity $c_n < 0$ (Fig. 7.9), we get $s_2 < s_1$ (the entropy of a gas undergoing compression diminishes).

On the *T-s* diagram (Fig. 7.26) polytropic compression is represented by the negatively sloping line *1-2c* (temperature increases and entropy diminishes), bounded by the isobars p_1 and p_2.

If the process of compression were a reversible adiabatic one, it is clear that the entropy of the gas would have remained constant throughout this process, $s_2 = s_1$, and the process would have been presented on the diagram by a vertical line* (*1-2b*). Finally, isothermal compression would have been presented by a horizontal line, (*1-2a*).

Fig. 7.26

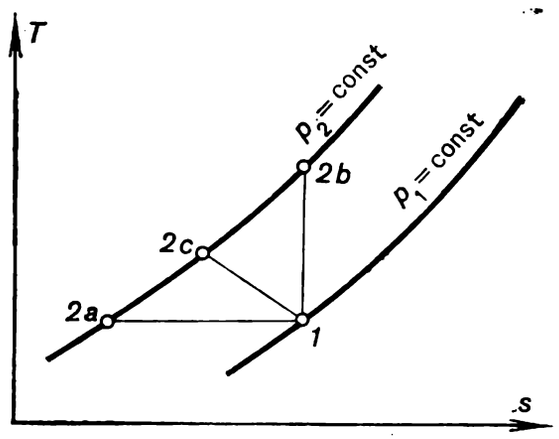

In many applications a compressor is to compress a gas to a high pressure p_2 at a comparatively low initial pressure p_1, i.e. the problem is to create a compressor that would ensure a large pressure ratio, p_2/p_1. If the ratio p_2/p_1 is sufficiently large, even with perfect cooling of the cylinder walls the temperature of the gas at the end of compression T_2 is often inadmissibly high. This difficulty is overcome by using the so-called *multistage compressors*, in which compression is affected successively in several cooled cylinders (Fig. 7.27, *I-III*). The important design feature of this compressor is that the gas discharged from one cylinder is cooled in a special heat exchanger (intercooler) from which the compressed gas passes to the next cylinder. The large cooling surfaces of the intercooler ensure a much more efficient removal of heat than the water jacket of a compressor cylinder. These heat exchangers, or intercoolers, permit the temperature of the gas discharged from a stage of a multistage compressor to be reduced almost to the temperature T_1 at the inlet of the compressor.

The indicator diagram of a three-stage compressor is depicted in Fig. 7.28. In the first stage of the compressor the gas is compressed from a pressure p_1 to a pressure p_{II} (compression proceeds along the polytropic curve *1-a*). Then, leaving the cylinder of the first stage, the gas is cooled along the isobar p_{II} = const in intercooler *1* (Fig. 7.27) to the initial temperature T_1 (point *b*, just as point *1*, lies on the isotherm *1-b-d-e*, corresponding to temperature T_1 = const). The gas then flows into the cylinder of the second stage where

* In the event of an irreversible adiabatic compression because of the additionally liberated heat due to friction, the entropy of the gas would increase and the slope of the line of the process would be positive.

it is compressed to the pressure p_{III} along the polytrope *b-c*. The gas is further cooled following the isobar p_{III} = const in the intercooler *2* (Fig. 7.27) to the temperature T_1. Then, the gas with properties p_{III} and T_1 gets into the cylinder of the third stage, where it is compressed to the pressure p_2 required, along the polytropic curve *d-2* (Fig. 7.28).

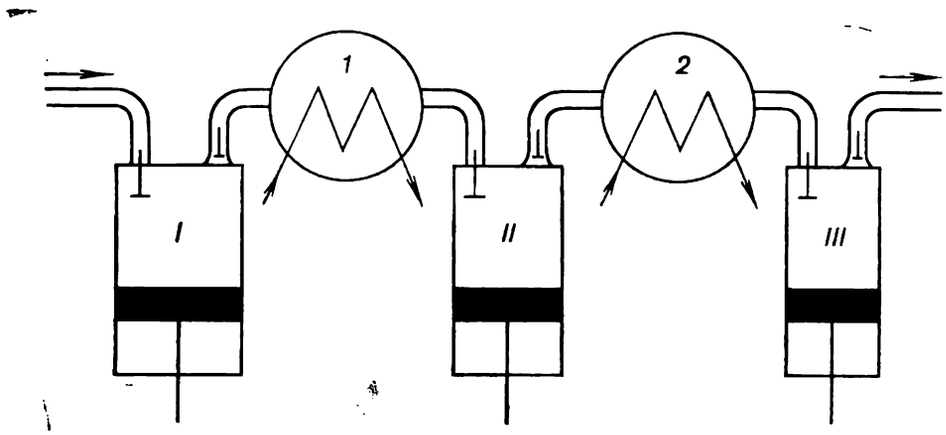

Fig. 7.27

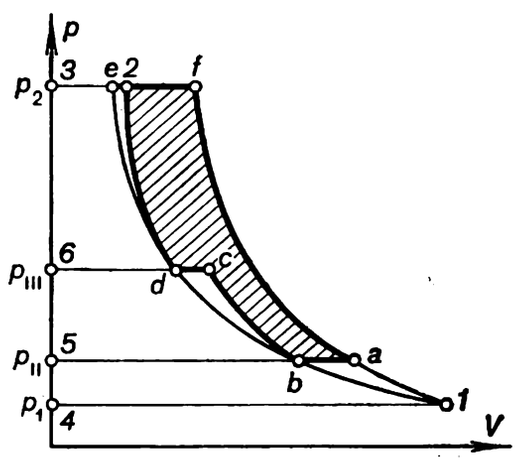

Fig. 7.28

From the indicator diagram, shown in Fig. 7.28, it can be seen that the employment of a multistage compressor instead of a single-stage machine for a given pressure ratio p_2/p_1 ensures, in addition to a lesser temperature of the compressed gas, a considerable gain in the work input per cycle; this gain *l* is represented by the shaded area *a-f-2-d-c-b-a* in Fig. 7.28.

In considering the principle of operation of a multistage compressor, a question naturally arises: how can we distribute the overall pressure ratio p_2/p_1 among the individual stages of the compressor? The solution of this problem is based on the following condition: the distribution of the pressure difference between the stages should be such that the total work input per cycle is minimum for the compressor. An analysis shows that for a multistage compressor with *m* stages the condition of minimum work input per cycle is satisfied if the following pressure ratio per stage is observed:

$$\frac{p_{\text{out. st.}}}{p_{\text{in. st.}}} = \sqrt[m]{\frac{p_2}{p_1}}, \tag{7.205}$$

the relation being the same for all stages.

It follows that, if the gas inlet temperature is the same for all stages and equal to T_1, then, in accordance with Eq. (7.200), the amount of heat removed in each stage of the compressor, q, is the same. Consequently, the amounts of heat removed in the intercoolers are also the same.

Finally, it is clear from Eq. (7.80) that the temperature drops will be the same for all stages of the compressor.

Fig. 7.29

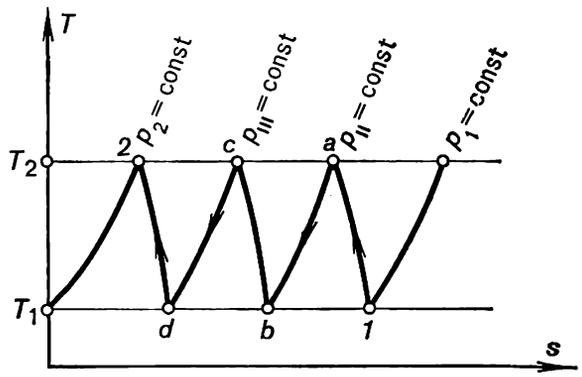

Fig. 7.30

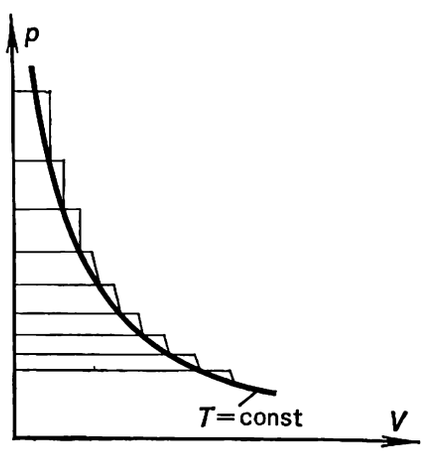

Fig. 7.31

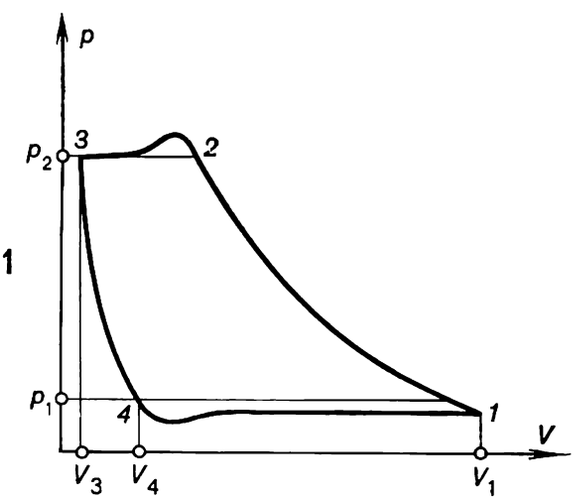

On the T-s diagram the process of compression in a multistage compressor will be represented as shown in Fig. 7.29.

If the number of compressor stages is too great, the indicator diagram will show an almost isothermal process of compression, as illustrated in Fig. 7.30. The problem in selecting the number of stages to ensure the preset compression of a gas is solved on the basis of not so much thermodynamic as general engineering and economic considerations.

It will be noted that so far we have been analyzing and considering idealized indicator diagrams of reciprocating compressors, differing somewhat from actual indicator diagrams. This difference consists in the following. For technical reasons, when displacing the compressed gas from a compressor cylinder, the piston fails to travel up to the left-hand wall of the cylinder (Fig. 7.21). Therefore, there exists a certain clearance, a volume in the cylinder amounting to about 10% of the swept volume of the cylinder. It is clear that due to the presence of this clearance not all the gas leaves the cylinder during the dis-

charge stroke, and the gas remaining in the cylinder fills the clearance of the cylinder at the pressure p_2 (on the actual indicator diagram, shown in Fig. 7.31, the clearance of the cylinder corresponds to volume V_3). During the return stroke of the piston the pressure in the clearance will decrease gradually (as represented by curve *3-4* in Fig. 7.31), and the inlet valve will open only after the pressure in the clearance becomes somewhat lower than p_1. Due to the presence of hydraulic resistance, the inlet valve will open only when the cylinder pressure becomes inferior to that in the low-pressure reservoir, and the discharge (delivery) valve will open when the cylinder pressure exceeds that in the high-pressure reservoir into which the compressed gas is discharged. The clearance reduces the output of the compressor and leads to a smaller amount of gas per cycle being induced by the piston.

At the same time it ought to be noted that the work input per cycle expended to compress 1 kg of gas remains the same irrespective of the presence of a clearance in the cylinder. In fact, as can be seen from the indicator diagram (Fig. 7.31), during polytropic compression, represented by curve *1-2*, work is expended to compress the gas, at the beginning of the process occupying volume V_1, from pressure p_1 to pressure p_2. At the same time, during polytropic compression along curve *3-4*, the compressed gas, filling the clearance in the cylinder and expanding from pressure p_2 to pressure p_1, performs work. The amount of gas taking part in this process at a pressure p_1 occupies the volume V_4. It follows that in the presence of a clearance the work output per cycle (denoted by L^*), taking Eq. (7.197) into account, can be presented in the following way:

$$L^* = -\frac{n}{n-1} p_1 V_1 \left[\left(\frac{p_2}{p_1}\right)^{\frac{n-1}{n}} - 1 \right] + \frac{n}{n-1} p_1 V_4 \left[\left(\frac{p_2}{p_1}\right)^{\frac{n-1}{n}} - 1 \right]; \quad (7.206)$$

thus,

$$L^* = -\frac{n}{n-1} p_1 (V_1 - V_4) \left[\left(\frac{p_2}{p_1}\right)^{\frac{n-1}{n}} - 1 \right]. \quad (7.207)$$

Inasmuch as $(V_1 - V_4)$ represents the swept volume of the cylinder, the mass of the gas induced (and, consequently, displaced into the high-pressure reservoir), G^*, is equal to

$$G^* = \frac{p_1 (V_1 - V_4)}{RT_1} \quad (7.208)$$

Solving Eq. (7.208) for $p_1 (V_1 - V_4)$ and substituting the result into Eq. (7.207), we obtain:

$$L^* = -\frac{n}{n-1} RT_1 \left[\left(\frac{p_2}{p_1}\right)^{\frac{n-1}{n}} - 1 \right] G^*;$$

thus the relation for 1 kg of gas follows, coinciding with Eq. (7.198).

Just as in any actual machine, the work spent in a real compressor to compress the gas is greater than the work input per cycle determined from Eq. (7.197), which was derived for an ideal compressor without taking into account several factors, such as friction between the piston and cylinder, piston rod and stuffing box, some clearance in the piston valves and stuffing boxes, heating of the induced gas due to contact with the walls of the cylinder which are heated in the course of compression, the losses due to throttling in the valves already mentioned, etc.

The design of real compressors, therefore, involves the use of various coefficients to account for the degree of imperfection of various component units of the machine. A detailed consideration of the design of real compressors is beyond the scope of this book.

It will be easily understood that the description of the processes taking place in rotary compressors differs little from the description of reciprocating compressors.

Notwithstanding the apparently great difference between the operational principle of centrifugal and axial compressors and that of reciprocating compressors, a corresponding analysis of the operation of the former indicates that the processes in centrifugal and axial compressors are characterized by the same thermodynamic relationships as in positive-displacement reciprocating compressors.

To make sure of this, we shall write the equation of the first law of thermodynamics for a flow process (2.64),

$$q_{12} = (i_2 - i_1) + \frac{w_2^2 - w_1^2}{2} + g(h_2 - h_1) + l_{\text{mech}} + l_{\text{fr}},$$

for the flow of gas in a centrifugal compressor (without friction). The state of the gas in the inlet and connections of the compressor will be denoted by subscripts *1* and *2*, respectively. The difference $(h_2 - h_1)$ is small and can be ignored. We can then assume $w_1 \cong w_2 \cong 0$; the gas velocity at the blade entry w_1 and at the diffuser outlet w_2 are actually very low. As applied to the process of compressing a gas in the compressor, the quantity l_{mech} in Eq. (2.64) is the work output per cycle of the compressor, determined from Eq. (7.195a). We shall again denote this work by l. With these assumptions in mind, from Eq. (2.64) we obtain:

$$q_{12} = (i_2 - i_1) + l.$$

In the above equation, q_{12} represents the heat removed from the gas during compression. Taking into account that q_{12} is negative (heat is removed), we obtain:

$$l = -(i_2 - i_1 - q_{12}),$$

which coincides with Eq. (7.202) derived for a reciprocating compressor. It follows that the process of compression in a centrifugal compressor is actually described by the equations which describe compression in a reciprocating machine.

In conclusion we shall mention the so-called *jet compressor*, or *ejector*. By an ejector we mean a device used to compress and displace gases, vapours and liquids. The operational principle of an ejector is based on the transfer of energy from one medium, moving at a high velocity (working medium, or fluid), to another medium (induced). The induced, or handled, medium is compressed and displaced because a fraction of the kinetic energy of the working medium is imparted to it while the two media are mixed. The schematic diagram of an ejector is depicted in Fig. 7.32. The working medium (gas or high-pressure steam) expands in nozzle *1* and passes into the combining chamber *2*, into which the induced medium to be compressed (gas or low-pressure steam) also flows. From the combining chamber the two-component mixture gets into diffuser *4* in which the kinetic energy of the jet converts into potential energy, while pressure rises.

It is clear that the mixing taking place in the ejector is one of the mixing processes considered in Sec. 7.8 above: the mixing of two streams, to form a common flow. It will be noted that the process of mixing in an ejector is irreversible, for a fraction of the kinetic energy of the working jet is expanded to cover the hydraulic losses. It is precisely this characteristic of an ejector that determines its low efficiency, this is sometimes compensated by the simple construction of ejectors.

The basic difference between the processes proceeding in an ejector and in a compressor consists in that in the ejector a gas or vapour is compressed not by an external source of mechanical work but by the working medium which mixes with the induced (handled) medium.

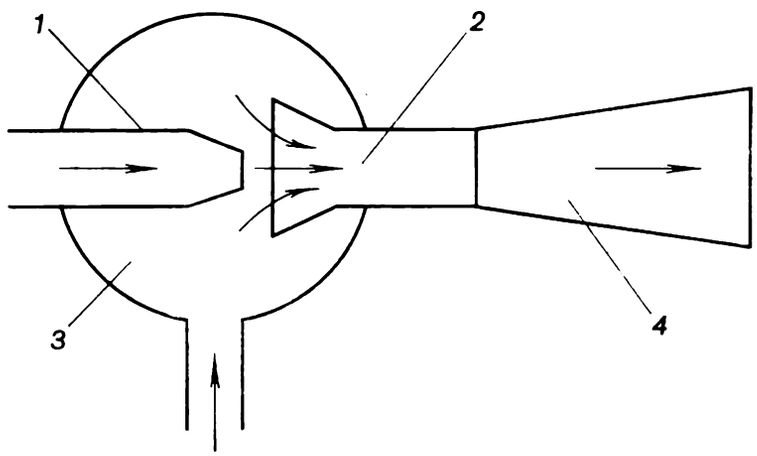

Fig. 7.32

Ejectors are divided into various types of working and induced media: gas-gas, steam-gas, liquid-gas, liquid-liquid, and steam-liquid ejectors. The vapour-liquid ejector is usually referred to as an injector. The working and the handled (induced) media may be the same substances or different substances.

8

Fluid flow processes

8.1 Basic flow equations

The mathematical statement of the first law of thermodynamics, formulated in Chapter 2, has the following form:

$$q_{12} = (i_2 - i_1) + \frac{w_2^2 - w_1^2}{2} + g(h_2 - h_1) + l_{\text{mech}} + l_{\text{fr}},$$

or in the differential form,

$$dq = di + w\,dw + g\,dh + dl_{\text{mech}} + dl_{\text{fr}}.$$

Taking into account that heat added to the flow, q, is the sum of the heat q_{ext}, coming from an external source and frictional heat q_{fr},

$$q = q_{\text{ext}} + q_{\text{fr}},$$

these equations can be presented in the following form:

$$q_{\text{ext}\,12} = (i_2 - i_1) + \frac{w_2^2 - w_1^2}{2} + g(h_2 - h_1) + l_{\text{mech}}, \tag{8.1}$$

$$dq_{\text{ext}} = di + w\,dw + g\,dh + dl_{\text{mech}}.$$

These equations are true with or without viscous friction on the walls of the conduit.

If the given length of flow is arranged on one geometrical level, then $dh = 0$; if the flow produces no mechanical work, and such work is transferred to the flow, then $dl_{\text{mech}} = 0$. It is exactly this special case of fluid flow that will be considered here. It is clear that for this case of flow Eq.

(2.68b) takes the following form:

$$dq_{ext} = di + w\,dw. \tag{8.2}$$

This equation shows that the heat added to or removed from the flow, q_{ext}, is expended to change the enthalpy (i) of the fluid (gas or liquid) and to change the flow velocity (w).

For most important engineering problems is the case of adiabatic flow, i.e. flow without addition or removal of heat (without heat transfer). Therefore, mainly cases of adiabatic fluid flow will be considered below.

The regularities of reversible adiabatic flow, i.e. of frictionless or ideal flow, as well as the problem of the irreversibility of flow due to friction, will be considered below.

The notion of flow without friction is, of course, an idealization of the properties of fluid, since all fluids possess a greater or smaller viscosity. Thus, an absolutely non-viscous liquid is commonly called an ideal liquid. The notion of an ideal liquid is rather useful in analyzing processes of fluid flow.

For adiabatic flow ($dq_{ext} = 0$), Eq. (8.2) can be presented in the form

$$di + w\,dw = 0. \tag{8.3}$$

It can be seen from Eq. (8.3) that if an adiabatic flow is accelerated ($dw > 0$), its enthalpy decreases ($di < 0$) and vice versa. In other words, an adiabatic flow is accelerated because of its enthalpy.

Let us consider one special case of reversible (i.e. frictionless) adiabatic flow of practical importance. For this flow the equation of the first law of thermodynamics takes the form

$$q_{12} = (u_2 - u_1) + (p_2v_2 - p_1v_1) + \frac{w_2^2 - w_1^2}{2} + g\,(h_2 - h_1) + l_{mech} + l_{fr},$$

or, which is the same, taking into account Eq. (2.66), we get:

$$q_{ext\,12} = (u_2 - u_1) + (p_2v_2 - p_1v_1) + \frac{w_2^2 - w_1^2}{2} + g\,(h_2 - h_1) + l_{mech}. \tag{8.4}$$

For the case of adiabatic flow ($q_{ext\,12} = 0$), in the absence of mechanical work ($l_{mech} = 0$), we obtain:

$$u_1 + p_1v_1 + \frac{w_1^2}{2} + gh_1 = u_2 + p_2v_2 + \frac{w_2^2}{2} + gh_2. \tag{8.5}$$

If the liquid is incompressible, $v_1 = v_2 = v$ and $dv = 0$.

From the general equation of the first law of thermodynamics (2.23),

$$dq = du + p\,dv.$$

it follows that for the case of reversible adiabatic flow (when not only $q_{ext} = 0$ but also $q_{fr} = 0$ and, consequently, $q = 0$)

$$pdv = -du. \tag{8.6}$$

It follows from Eq. (8.6) that for an incompressible liquid ($dv = 0$) $du = 0$, i.e. $u_1 = u_2$, and Eq. (8.5) reduces

$$p_1v + \frac{w_1^2}{2} + gh_1 = p_2v + \frac{w_2^2}{2} + gh_2. \tag{8.7}$$

Taking into account that $v = 1/\rho$, where ρ is the density, we get:

$$p_1 + \frac{\rho w_1^2}{2} + \rho gh_1 = p_2 + \frac{\rho w_2^2}{2} + \rho gh_2. \tag{8.7a}$$

Equation (8.7a), the mathematical statement of the first law of thermodynamics for the reversible adiabatic flow of an incompressible liquid, is called the *Bernoulli equation*,

long known in hydrodynamics where it was derived from Newton's laws. The Bernoulli equation is of great importance since, for all practical purposes, at low pressures all liquids (and gases in certain cases) can be considered to be incompressible.

When $h_1 = h_2$, Eq. (8.7a) can be presented in the form

$$p_1 + \frac{\rho w_1^2}{2} = p_2 + \frac{\rho w_2^2}{2}. \tag{8.7b}$$

The term $\rho w^2/2$ is called the *dynamic pressure* (head) as distinguished from the quantity p, sometimes referred to as *static pressure*. The sum of the static and dynamic pressures is called the *total pressure*. Equation (8.7b) indicates that for a reversible adiabatic flow of an incompressible* liquid at h = const the total pressure is constant along the flow. The static pressure is the pressure indicated by a pressure-gauge (manometer) moving with the flow. When the flow is decelerated ($w = 0$), the static pressure becomes equal to the total pressure.

Integrating equation (8.3) between two points in the flow, we obtain:

$$i_1 - i_2 = \frac{w_2^2 - w_1^2}{2}; \tag{8.8}$$

thus,

$$w_2 = \sqrt{2(i_1 - i_2) + w_1^2}. \tag{8.9}$$

Equation (8.9) shows how to determine the velocity of the adiabatic flow at point *2* (Fig. 8.1) if the velocity at point *1* and also the difference (or as it is sometimes referred to the drop) between the enthalpies at points *1* and *2* are known. Like the initial equation (8.3), this equation is valid for reversible adiabatic flow and for adiabatic flow with friction.

It is convenient to find the enthalpy drop ($i_1 - i_2$) with the aid of the *i-s* diagram**. Knowing the properties of the fluid (gas or liquid) at point *1* and at least one property at point *2* (for instance, pressure p_2), we can easily find the value of i_2: if a reversible adiabatic flow is considered, it is clear that points *1* and *2* lie on the isentrop s = const, represented by a vertical straight line on the *i-s* diagram. The intersection of the isentrop s = const with the isobar p_2 = const gives the unknown point *2* (Fig. 8.1).

The problem of determining the velocity of flow at point *2* in terms of the known values of the thermal properties of state and velocity at point *1* and pressure at point *2* can be solved in another way. It will be recalled that, as it was shown in Chapter 2, Eq. (2.73),

$$w\,dw = -v\,dp,$$

is applicable to frictionless flow*** at $l_{\text{mech}} = 0$ and $dh = 0$.

It follows from Eq. (2.73) that if the pressure drops in the direction of flow ($dp < 0$), flow velocity increases ($dw > 0$), and vice versa. Integrating this equation, we obtain:

$$\frac{w_2^2}{2} - \frac{w_1^2}{2} = -\int_{p_1}^{p_2} v\,dp, \tag{8.10}$$

---

* If the difference between p_1 and p_2 is not too great, so that v_1 and v_2 are close to each other, Eq. (8.7b) can also be applied with a certain degree of accuracy to a compressible medium. Then ρ is the average fluid density in the interval of the static pressures considered.

** The *i-s* diagram (or chart) was suggested by R. Mollier chiefly to simplify the calculations of the drop in enthalpy in designing steam turbines and other machines.

*** Not only of adiabatic, but of any other flow process.

or, which is the same,

$$\frac{w_2^2}{2}-\frac{w_1^2}{2}=\int_{p_2}^{p_1} v\,dp; \tag{8.10a}$$

thus,

$$w_2=\sqrt{2\int_{p_2}^{p_1} v\,dp+w_1^2}\,. \tag{8.11}$$

Equation (8.11), like Eq. (8.9), permits flow velocity at point *2* to be determined from the known flow velocity at point *1*, provided the value of

Fig. 8.1

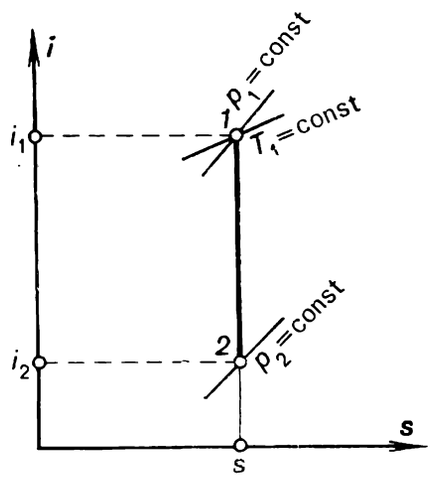

Fig. 8.2

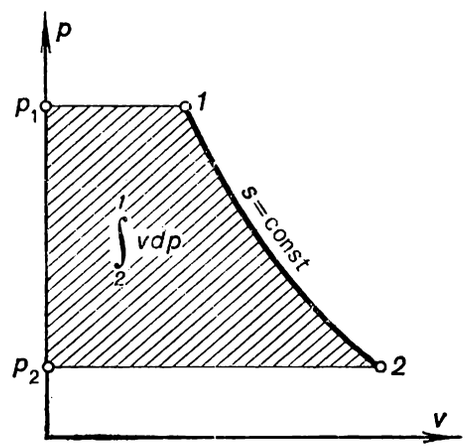

the integral $\int_{p_2}^{p_1} v\,dp$ is known. It should be emphasized that in its general form Eq. (8.11) is true not only for a reversible adiabatic flow but also for any other kind of frictionless flow. Indeed, this equation was derived from relationship (2.73) making no assumption regarding the nature of flow except assuming the flow to be frictionless (in particular, no assumption was made that $dq_{ext}=0$). The individual properties of this or that process of flow will be used in calculating the integral $\int_{p_2}^{p_1} v\,dp$ for isothermal, polytropic and other processes. The nature of the dependence of v on p will be different and, consequently, the values of this integral will also differ. In particular, for this reversible adiabatic flow points *1* and *2* lie on an isentrop, and on the p-v diagram this integral is represented by the area bounded by the isentrop and isobars p_1 and p_2 (Fig. 8.2).

For real liquids and gases this integral is calculated from experimental data on the p-, v-, and T-dependencies applying numerical methods, and for ideal gases the integral is calculated from the equation of the adiabat. The amount of work expended to increase the kinetic energy of flow without friction, at $dh=0$ and $dl_{mech}=0$ [see Eq. (8.10a)],

$$\frac{w_2^2}{2}-\frac{w_1^2}{2}=\int_{p_2}^{p_1} v\,dp,$$

represents the work of expansion done by the flow $\int_{v_1}^{v_2} p\,dv$ and the work of displacement $(p_2v_2 - p_1v_1)$.

Indeed, from equation

$$v\,dp = d\,(pv) - p\,dv$$

it follows that

$$\int_{p_1}^{p_2} v\,dp = (p_2v_2 - p_1v_1) - \int_{v_1}^{v_2} p\,dv; \tag{8.12}$$

whence,

$$\int_{p_2}^{p_1} v\,dp = \int_{v_1}^{v_2} p\,dv - (p_2v_2 - p_1v_1). \tag{8.13}$$

Inasmuch as the work of displacement is the "inevitable companion" of any kind of flow, it is clear that we can use only that fraction of the work, performed by a system (in this case by the flow) undergoing expansion, which remains after the work of displacement is subtracted. This is the quantity

$$\frac{w_2^2}{2} - \frac{w_1^2}{2}.$$

In other words, only this fraction of the work of flow expansion can be converted into other kinds of work expended to increase the kinetic energy. Therefore, the quantity $\int_{p_2}^{p_1} v\,dp$ is sometimes called the *available work* whose meaning is clear from the foregoing.

In conclusion, let us find the equation relating the enthalpy drop across points *1* and *2* of the flow $(i_1 - i_2)$ and the magnitude of the available work $\int_{p_2}^{p_1} v\,dp$.

From the equation of the first law of thermodynamics (2.44)

$$dq = di - v\,dp,$$

we obtain:

$$di = v\,dp \tag{8.14}$$

for a reversible adiabatic flow ($q_{ext} = 0$, $q_{fr} = 0$ and thus $q = q_{ext} + q_{fr} = 0$). Consequently,

$$i_1 - i_2 = \int_{p_2}^{p_1} v\,dp. \tag{8.15}$$

8.2 Velocity of sound

As is generally known, the *velocity of sound* is the speed of propagation in a medium of small perturbations (a small perturbation being defined as a disturbance of the medium during which the local change in medium pressure at the point of the disturbance, i.e. the pressure amplitude, is negligible com-

pared with the total pressure). Let us find the relation between the velocity of sound in a given medium and the thermodynamic properties.

For this purpose we shall consider the propagation of a small perturbation in a medium undergoing compression. Let a piston be introduced into a pipe filled with a stationary medium (gas or liquid at a pressure p and density ρ) undergoing compression, as illustrated in Fig. 8.3. At a certain moment this piston begins to move with a velocity dw. Inasmuch as the gas is compressible, it will not begin at once to move along the pipe with the speed of the piston (as it would be, for instance, if the piston displaced a metal cylinder instead of a gas). In the given case the layer of gas directly in contact with the piston is compressed and the gas pressure increases somewhat in this layer to a value equal to $p + dp$; then the next layer of gas is compressed, etc. In other words, the so-called weak *compression wave* is propagated in the

Fig. 8.3

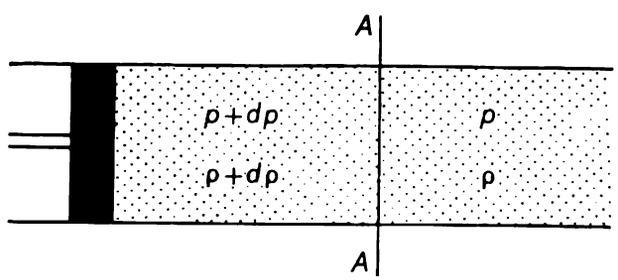

gas, a wave which can be visualized as a section AA (Fig. 8.3) moving along the gas. The gas is stationary in front of this section and has pressure p and density ρ (unperturbed region); downstream from this section it moves with a velocity dw and has a pressure $p + dp$ and density $\rho + d\rho$ (perturbed region). The speed with which this section moves along the gas, i.e. the speed of propagation of the small perturbation considered will be denoted by a. In the time interval $d\tau$ the section AA, separating the unperturbed and perturbed regions, will move a distance $a\,d\tau$. The mass of the unperturbed gas dG entrained by this section in time $d\tau$ is, evidently, equal to

$$dG = \rho\Sigma a\,d\tau, \tag{8.16}$$

i.e. to the product of the distance covered by the section AA, the cross-sectional area of the pipe Σ and the density ρ of the unperturbed gas. The mass of the perturbed gas, dG', which section AA shall leave behind in the same time interval will, evidently, be equal to

$$dG' = (\rho + d\rho)\,\Sigma\,(a - dw)\,d\tau. \tag{8.17}$$

It should be emphasized that in Eq. (8.16) the quantity $(a - dw)$ should be used for the velocity, instead of velocity a; inasmuch as the perturbed gas moves with a velocity dw, it tends to "overtake" the section AA, which moves with respect to the perturbed gas with a velocity equal to $(a - dw)$ and not a. The notion of the continuity of the mass of gas filling the pipe yields

$$dG = dG'.$$

Thus, taking into account Eqs. (8.16) and (8.17), we get:

$$\rho a = (\rho + d\rho)\,(a - dw). \tag{8.18}$$

Equation (8.18) contains two unknown quantities: w and a. To determine the unknown speed of propagation of the small disturbance a, one more equation containing the unknowns w and a should be added to Eq. (8.18). It is convenient to use the equation for momenta known from classical mechanics, according to which the change in momentum of a body of mass G is equal to the impulse received by this body acted upon by force F.

In time $d\tau$ the mass of the unperturbed gas dG entrained by section AA [and determined from equation (8.16)] changed its velocity from zero to dw. Thus, the change in momentum of this mass in time $d\tau$ is $dw\,dG$. The force acting upon this mass of gas is equal to the product of the cross-sectional area of the pipe, Σ, by the difference in the pressures to the left and right of the given mass of gas, i.e. the quantity dp. Consequently, the impulse will be equal to $\Sigma\,dp\,d\tau$. Taking into account Eq. (8.16), we have for the above-mentioned momentum equation the following form:

$$\Sigma\,dp\,d\tau = \rho\,\Sigma\,a\,d\tau\,dw;$$

thus,

$$dp = \rho a\,dw. \tag{8.19}$$

Solving Eqs. (8.18) and (8.19) jointly and disregarding infinitesimals of second order, we obtain:

$$dp = a^2\,d\rho. \tag{8.20}$$

It follows from Eq. (8.20) that the velocity of propagation of small perturbations (the velocity of sound in a medium) is determined from the following relationship

$$a = \sqrt{\frac{dp}{d\rho}}. \tag{8.21}$$

This equation was first used by Isaac Newton (1687) to calculate the velocity of sound in gases. In order to use Eq. (8.21), we must know the nature of the distribution of sound waves, i.e. the conditions for which the derivative $dp/d\rho$ should be calculated.

Newton believed that the process of sound propagation in a gas is isothermal. Making use of the Boyle equation for the isothermal process in an ideal gas,

$$pv = \text{const},$$

from which it follows that

$$\left(\frac{\partial p}{\partial \rho}\right)_T = \frac{p}{\rho}, \tag{8.22}$$

Newton calculated the velocity of sound in air at atmospheric pressure and room temperature (with these properties of state air can be regarded with a good approximation as an ideal gas). The value of the velocity of sound in air obtained by measuring, however, exceeded by about 20% the value found by Newton.

The reason for the discrepancy was revealed by Laplace (1816), who suggested that since sound propagates in a medium very rapidly, no heat transfer of any importance will have time to take place between the rarefaction and sound-wave compression zones and the surroundings; therefore, medium oscillations, due to propagation of a sound wave, can be considered to be adiabatic and isentropic. The derivative in Eq. (8.21) should, therefore, be

taken for s = const, i.e.

$$a = \sqrt{\left(\frac{\partial p}{\partial \rho}\right)_s}. \tag{8.21a}$$

Equation (8.21a) is known as the *Laplace equation.*

With the magnitude of $(\partial p/\partial \rho)_s$ known, the Laplace equation permits us to calculate the velocity of sound propagation in a medium.

The quantity a, calculated from the Laplace equation, is sometimes referred to as the *thermodynamic velocity of sound*, or the velocity of sound of zero frequency. With propagation of sound of a sufficiently high frequency in a gas or liquid, the assumption of the isentropic nature of sound oscillations ceases to be valid; at these frequencies the velocity of sound depends on frequency and differs somewhat from the quantity a, determined from the Laplace equation. However, for a wide frequency band of practical importance, the values of a calculated from the Laplace equation agree with experimentally measured values to within one-hundredth of one per cent.

Taking into account that $\rho = 1/v$, the Laplace equation (8.21a) can be presented in the following form:

$$a = \sqrt{-v^2\left(\frac{\partial p}{\partial v}\right)_s}, \tag{8.23}$$

where $(\partial p/\partial v)_s$ is the reciprocal of the adiabatic compressibility of substance.

Since the quantities v and $(\partial p/\partial v)_s$ are functions of state, the velocity of sound a, determined from the Laplace equation, is also a thermodynamic function of state.

It will be noted that the Laplace equation is valid for any compressible homogeneous media, including solids whose compressibility compared to gases and liquids is small but nevertheless finite. Thus, the adiabatic compressibility of water vapour at a temperature of 100 °C and atmospheric pressure (98 kPa = 1 kgf/cm^2) is $(\partial v/\partial p)_s = -0.1259 \times 10^{-4}$ (m^4-s^2)/kg^2, the compressibility of water at 20 °C and at the same pressure is $-0.4434 \times \times 10^{-12}$ (m^4-s^2)/kg^2, and the compressibility of iron at 20 °C is approximately -6.14×10^{-16} (m^4-s^2)/kg^2; the velocity of sound in each of these media is 471, 1505, and 5130 m/s, respectively. The compressibility of an absolutely incompressible medium $(\partial v/\partial p)_s = (\partial v/\partial p)_T = 0$, and the velocity of sound propagation in such a medium is infinitely large.

It will be recalled that in Sec. 7.4 the isentropic exponent was determined in the following way:

$$k = -\frac{v}{p}\left(\frac{\partial p}{\partial v}\right)_s.$$

It is clear from Eqs. (8.23) and (7.44) that

$$a = \sqrt{kpv}. \tag{8.24}$$

Equation (8.24) permits us to determine a, based on the known values of pressure p, specific volume of the medium v and the isentropic (adiabatic) exponent k.

Taking into account Clapeyron's equation (1.23),

$$pv = RT,$$

we obtain for an ideal gas:

$$a = \sqrt{kRT}. \tag{8.25}$$

It follows from Eq. (8.25) that for an ideal gas the velocity of sound is proportional to $\sqrt{T}$, with the coefficient of proportionality varying for different ideal gases (different k and R).

It should also be noted that since

$$R = \frac{8314}{\mu} \text{ J/(kg-K)}, \tag{1.32}$$

where μ is the molecular mass of the gas, it follows from Eq. (8.25) that the velocity of sound in a gaseous medium is the greater the smaller the molecular weight of the gas.

Fig. 8.4

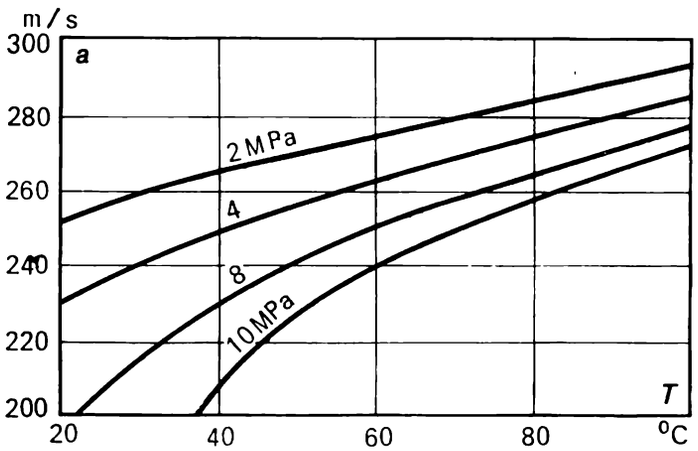

The numerical values of the velocity of sound in gases are given in Table 8.1, containing the values of a for various gases at 20 °C, calculated with the aid of Eq. (8.25).

Table 8.1 Velocity of sound in gases at 20 °C

Gas	μ	R (J/kg-K)	k	a (m/s)
Hydrogen	2.016	4124	1.41	1305
Helium	4.003	2077	1.66	1005
Water vapour	18.016	461.4	1.33	424
Nitrogen	28.016	296.8	1.40	349
Air	28.960	287.0	1.40	343
Oxygen	32.000	259.8	1.40	327
Carbon dioxide	44.010	188.9	1.31	269
Freon-12 (CCl_2F_2)	120.920	69.28	1.14	152

It will be emphasized again that Eq. (8.24) is true both for ideal and real gases (including liquids and solids) whereas Eq. (8.25) is valid only for ideal gases.

As can be seen from Eq. (8.25), for a given ideal gas, the velocity of sound

depends only on temperature; for a real gas, the velocity of sound depends not only on temperature but also on pressure. An example of such a dependence is the chart $a = f(p, T)$ for carbon dioxide shown in Fig. 8.4.

8.3 Flow through convergent nozzles

Let us now calculate the flow of gases through nozzles. A steadily flowing fluid (gas or liquid) can be accelerated with the aid of a special duct with a gradually tapering cross-sectional area, referred to as a *nozzle*. A nozzle is a duct with a cross-sectional area tapering in the direction of flow*.

Fig. 8.5

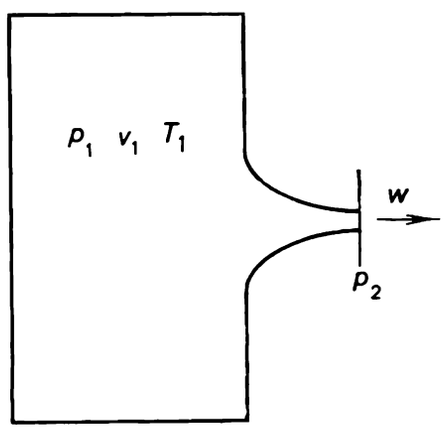

Let us consider the process of reversible, i.e. frictionless, adiabatic flow of gas through a nozzle connected to a gas reservoir of big capacity (Fig. 8.5). The volume of the reservoir is assumed to be large enough so that the flow of the gas from the nozzle into the reservoir in the given time intervals does not lead to any noticeable increase in gas pressure in the reservoir. We shall denote the parameters of the gas filling the reservoir by p_1, v_1 and T_1, and the pressure of the gas at the nozzle outlet by p_2. The gas pressure at the nozzle outlet will be assumed to be equal to the pressure of the medium into which the gas is discharged (the importance of this assumption will be elucidated below).

We shall denote the velocity of the gas at the inlet to the nozzle by w_1 and determine the velocity of the gas at the outlet from the nozzle w_2 in terms of the known values of w_1, p_1, v_1 and p_2.

This problem can be solved, as was mentioned above, with the aid of Eq. (8.9), according to which

$$w_2 = \sqrt{2(i_1 - i_2) + w_1^2},$$

with the values of the enthalpies being conveniently determined from the *i-s* diagram.

* Nozzles of this kind are used with subsonic speeds of flow. The shape of supersonic nozzles will be described below.

This problem can also be solved with the aid of Eq. (8.11) according to which

$$w_2 = \sqrt{2\int_{p_2}^{p_1} v\,dp + w_1^2}\,,$$

in which the integral is calculated from experimental data, plotting an isentropic curve on the p-v diagram.

The magnitude of w_2 can be easily determined for the reversible adiabatic flow of a non-compressible liquid with the aid of Eq. (8.11). Inasmuch as for an incompressible liquid v does not depend on p, in Eq. (8.11) v can be taken out of the integral sign; as a result Eq. (8.11) takes the form

$$w_2 = \sqrt{2v(p_1 - p_2) + w_1^2}. \tag{8.26}$$

Equation (8.11) can also be used to find the exit velocity, w_2, for an ideal gas flowing through a nozzle. From the equation of an adiabat (7.15) we obtain:

$$v = \frac{p_1^{1/k}}{p^{1/k}} v_1. \tag{8.27}$$

Substituting this value of v into Eq. (8.11) and integrating, we obtain the nozzle exit velocity:

$$w_2 = \sqrt{2\frac{k}{k-1} p_1 v_1 \left[1 - \left(\frac{p_2}{p_1}\right)^{\frac{k-1}{k}}\right] + w_1^2}. \tag{8.28}$$

If flow velocity at the inlet to the nozzle, w_1, is negligible compared to the exit velocity w_2, Eq. (8.28) takes the following form:

$$w_2 = \sqrt{2\frac{k}{k-1} p_1 v_1 \left[1 - \left(\frac{p_2}{p_1}\right)^{\frac{k-1}{k}}\right]}. \tag{8.29}$$

As can be seen from Eq. (8.29), the gas exit velocity w_2 will be higher the smaller the ratio p_2/p_1 is.

The mass flow G through the nozzle is calculated in the following way. The volume of the gas flowing through the nozzle per unit time V is, evidently, equal to

$$V = v_2 G,$$

where v_2 is the specific volume of the gas at the nozzle outlet section.

On the other hand, the same quantity V can be determined as

$$V = w\Sigma,$$

where Σ is the area of the nozzle outlet section. It follows from this that

$$G = \frac{w\Sigma}{v_2}. \tag{8.30}$$

Replacing v_2 in relationship (8.30) with the aid of the equation for the adiabat (7.50)*, represented in the form,

$$\frac{1}{v_2} = \left(\frac{p_2}{p_1}\right)^{1/k} \frac{1}{v_1}, \tag{8.31}$$

we obtain:

$$G = \frac{w\Sigma}{v_1} \left(\frac{p_2}{p_1}\right)^{1/k}. \tag{8.32}$$

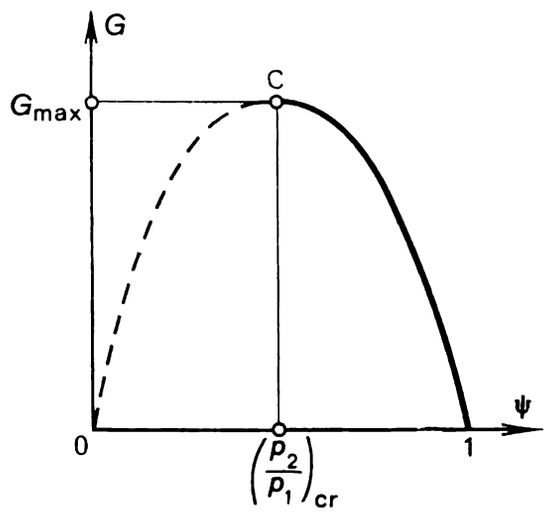

Fig. 8.6

Substituting the expression for w from Eq. (8.29) into Eq. (8.32), we have:

$$G = \Sigma \sqrt{2 \frac{k}{k-1} \frac{p_1}{v_1} \left[\left(\frac{p_2}{p_1}\right)^{\frac{2}{k}} - \left(\frac{p_2}{p_1}\right)^{\frac{k+1}{k}} \right]}. \tag{8.33}$$

Equation (8.33) relates the discharge of an ideal gas in irreversible adiabatic flow through a nozzle with an exit area Σ and the quantities p_1, v_1 and p_2. The equation can be used to solve a reverse problem of finding the area of the nozzle exit which would ensure a given mass flow G through the nozzle at given gas inlet and exit conditions.

An analysis of the dependence of the mass flow or discharge G, determined by Eq. (8.33), on the ratio of the outlet gas pressure to the pressure of the gas at the inlet to the nozzle, p_2/p_1 (denoted by ψ), shows that this dependence is represented by curve 1-C-0 on the chart plotted in Fig. 8.6. It is clear that when $\psi = 1$, we have $G = 0$. When ψ diminishes, G increases and reaches a maximum at a certain value of ψ. With a further decrease in ψ the discharge from the nozzle G decreases, according to Eq. (8.33), becoming zero when $\psi = 0$.

A comparison of this dependence, determined by Eq. (8.33), with experimental data on the flow of gases through nozzles reveals an interesting picture. With the value of ψ changing from one to a magnitude corresponding to a

* This relationship can be used to calculate v_2. The magnitude of the temperature of the gas at the outlet from the nozzle, T_2, can be calculated from Clapeyron's equation from known p_2 and v_2.

maximum discharge, the results calculated with the aid of Eq. (8.33) agree closely with experimental data (the right branch of the curve in Fig. 8.6). The values of ψ, ranging from zero to the value corresponding to maximum discharge, showed, surprisingly, that a decrease in the pressure downstream of the nozzle (back pressure) in no way affects the discharge of gas from the nozzle; the discharge G remains constant for this range of ψ (up to $\psi = 0$). The curve, presenting G as a function of (ψ), $G = f(\psi)$, and corresponding to a real process is presented by the solid line on the chart shown in Fig. 8.6. To explain this discrepancy between theory and experiment, de Saint-Venant (1839) hypothesized that when a gas is expanding in a convergent nozzle it is impossible to obtain a gas pressure below a critical discharge pressure p^*

Fig. 8.7

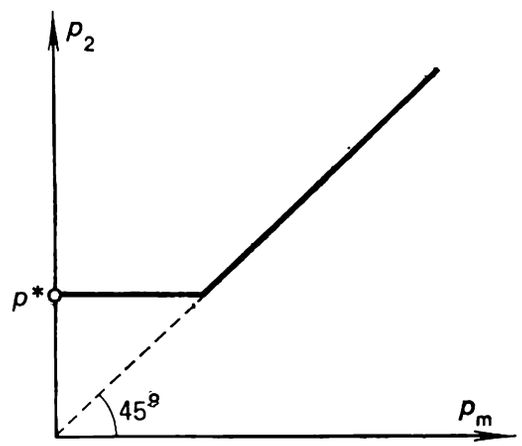

(not to be confused with the pressure at the critical point on the saturation curve) corresponding to a maximum mass flow of the gas through the nozzle. Consequently, at any low back pressure smaller than p^*, the pressure of gas at the exit section of a convergent nozzle remains constant and equal to p^*. It follows that the straight-line part of the dependence $G = f(\psi)$, shown in Fig. 8.6, corresponds to a constant pressure $p_2 = p^*$. Further research has shown the hypothesis to be correct. Thus the above conclusion that the gas exit velocity w increases with a decrease in ψ requires basic revision: this increase in pressure takes place only until p_2 diminishes to p^*. A further decrease in back pressure does not cause a rise in w.

To illustrate, let us consider the chart presented in Fig. 8.7, showing the dependence of nozzle exit pressure p_2 on back pressure or medium pressure p_m.

As can be seen from this chart, at $p_2 > p^*$ the nozzle exit pressure is equal to the pressure of the surroundings (or back pressure) into which the gas flows from the nozzle. At $p_m < p^*$ the nozzle exit pressure p_2 remains constant and equal to the critical pressure p^*.

Let us find out what takes place in a nozzle when the back pressure is reduced to the critical pressure p^*. For this purpose we shall examine Eq. (8.33) for the maximum. The quantity G reaches maximum when the bracketted difference in the right-hand side of Eq. (8.33) reaches a maximum. Differentiating this difference with respect to ψ and equating the value obtained (following the rules for finding an extremum) to zero, we obtain:

$$\frac{2}{k}\psi^{\frac{2}{k}-1} - \frac{k+1}{k}\psi^{\frac{1}{k}} = 0.$$

Denoting the value of ψ corresponding to a discharge $G = G_{max}$ (and, consequently, for $p_2 = p^*$) by ψ_{cr}, we obtain:

$$\psi_{cr} = \left(\frac{2}{k+1}\right)^{\frac{k}{k-1}}. \tag{8.34}$$

Relationship (8.34) shows that the magnitude of the critical pressure ratio $\psi_{cr} = p^*/p_1$ depends on k, but weakly: for $k = 1.4$ we have $\psi_{cr} = 0.53$, and for $k = 1.3$ we have $\psi_{cr} = 0.55$. Thus, the change of ψ is not too great. For all evaluating calculations the dependence of ψ_{cr} on k can be ignored, and we may assume that $\psi_{cr} \cong 0.5$.

Equation (8.29) was derived above to calculate the nozzle exit velocity for an ideal gas based on known p_1, v_1 and $\psi = p_2/p_1$. To obtain from Eq. (8.29) an expression for the nozzle exit velocity at a maximum mass flow (we shall denote this velocity by w^*) substitute into Eq. (8.29) the value of ψ_{cr} obtained from Eq. (8.34). This substitution gives

$$w^* = \sqrt{2\frac{k}{k+1}p_1v_1}. \tag{8.35}$$

Accordingly, we obtain the expression for the maximum mass flow through the nozzle from Eq. (8.33), taking into account Eq. (8.34):

$$G_{max} = \Sigma\sqrt{2\frac{k}{k+1}\frac{p_1}{v_1}\left(\frac{2}{k+1}\right)^{\frac{2}{k-1}}}. \tag{8.36}$$

Now replace in Eq. (8.35) p_1 and v_1 with the parameters of the gas in the exit (outlet) section of the nozzle, p^* and v^*. From the equation of the adiabat (7.51) it follows that

$$v_1 = v^*\left(\frac{p^*}{p_1}\right)^{\frac{1}{k}}. \tag{8.37}$$

Replacing in the above expression the term p^*/p_1 according to Eq. (8.34), we obtain:

$$v_1 = v^*\left(\frac{2}{k+1}\right)^{\frac{1}{k-1}}. \tag{8.38}$$

The quantity p_1 is expressed in terms of p^* with the aid of the same Eq. (8.34):

$$p_1 = p^*\left(\frac{2}{k+1}\right)^{-\frac{1}{k-1}}. \tag{8.39}$$

Substituting these values of v_1 and p_1 into Eq. (8.35), we obtain:

$$w^* = \sqrt{kp^*v^*}. \tag{8.40}$$

A comparison of the equation obtained for w^* with Eq. (8.24) shows w^* to be equal to the local velocity of sound* in the exit of the nozzle:

$$w^* = a. \tag{8.40a}$$

This is precisely what explains the "strange" behaviour of the function $G = f(\psi)$ mentioned above. Indeed, as was observed in deriving the Laplace equation for the velocity of sound, any small (infinitesimal) perturbation, including a change in pressure, propagates in a compressible medium with the velocity of sound. If gas pressure downstream from the nozzle, p_2, is reduced at a certain moment, a rarefaction wave will propagate along the flow in the direction opposite to flow; a new pressure distribution along the nozzle sets in (at the same pressure p_1 at the nozzle inlet) and flow velocity increases. It should also be noted that the rarefaction wave will propagate along the nozzle with a relative velocity $(a - w)$. We now consider the case when the pressure of the medium into which the gas flows, p_2, is equal to p^* and the exit velocity is equal to the local velocity of sound. With a further decrease in medium pressure below p^* it will be impossible for the rarefaction wave to propagate along the nozzle, since its relative velocity $(a - w)$ will be zero because in this case $w = a$. No redistribution of pressure along the nozzle will take place, and, notwithstanding the fact that pressure of the surroundings has diminished, the exit velocity will remain equal to the velocity of sound at the nozzle exit (nozzle exit sonic velocity). According to the image-bearing expression of O. Reynolds, in this case the flow through the nozzle "does not know" that the pressure downstream from the nozzle has decreased. Therefore at $0 \leqslant \psi \leqslant \psi_{cr}$ the mass flow of gas through the nozzle remains constant and equal to G_{max}.

In considering the flow of gas through a nozzle, we must ask what considerations are followed and how is the shape of the nozzle selected, i.e. what are the inlet and exit areas of the nozzle, its length and shape. The pressure at the inlet of the nozzle, p_1, and the pressure downstream from the nozzle, p_m, are usually given. If the discharge through the nozzle is given, the inlet and exit areas of the nozzle are calculated with the aid of an equation similar to Eq. (8.30):

$$G = \frac{\Sigma_{in} w_1}{v_1} = \frac{\Sigma_{ex} w_2}{v_2}. \tag{8.41}$$

The exit velocity is usually calculated with the aid of Eq. (8.28) for the general case, and Eq. (8.29) is used for the case when $w_1 \ll w_2$. It follows that the length of the nozzle is not present in the thermodynamic relations determining the regularities of reversible adiabatic flow through a nozzle. From this it follows that for reversible adiabatic flow the length of the nozzle does not matter, i.e. the precisely calculated inlet (Σ_{in}) and exit (Σ_{ex}) areas of the nozzle can be arranged at any distance from each other and interconnected by a smooth duct. The length of a nozzle intended for a real flow,

---

* Since, as can be seen from Eq. (8.24), the velocity of sound a is different for different values of p and v and with a gas in adiabatic flow its pressure and, consequently, its specific volume changes along the nozzle, the velocity of sound in the gas will differ in different sections of the nozzle. It is due precisely to this fact that the velocity of sound in a gas flowing at parameters corresponding to a given nozzle section is referred to as "local velocity of sound".

however, is determined by the inlet and exit areas and the angle of conicity; the latter is selected based on minimum frictional losses.

Before calculating the flow of an ideal gas through a nozzle at given values of p_1 and p_m, it is first necessary to compare the ratio p_m/p_1 with the quantity ψ_{cr} determined from Eq. (8.34).

If

$$p_m/p_1 > \psi_{cr},$$

then

$$p_2 = p_m,$$

and the flow through the nozzle should be calculated with the aid of Eqs. (8.29) and (8.33).

If

$$p_m/p_1 = \psi_{cr},$$

then

$$p_2 = p_m = p^*,$$

and calculation formulas (8.35) and (8.36) apply.

Finally, if

$$p_m/p_1 < \psi_{cr},$$

then

$$p_2 = p^* > p_m,$$

and the calculations must be done with the aid of Eqs. (8.35) and (8.36) as before.

As was already mentioned the exit velocity of real gases is calculated with the aid of Eq. (8.9) or (8.11), making use of the *i-s* diagram or the data on p, v and T. The nozzle exit area is calculated from Eq. (8.30) which, of course, is valid for any fluid flow.

The critical pressure p^* for a real gas in reversible adiabatic flow is determined in the following way. Plot the variation of the nozzle exit velocity w with p_2 at given gas inlet conditions (p_1 and T_1). It will be recalled that since the process of flow is assumed to be reversible and adiabatic, the states of a real gas, corresponding to the expansion in the nozzle, will be arranged on the *i-s* diagram on the isentrop below point *1*, the point corresponding to the gas inlet conditions (Fig. 8.8*a*). Determining for different isobars $p_2 < p_1$ the values of i_2 at the points where these isobars intersect the isentrop $s =$ const with the aid of Eq. (8.9), which for the case $w_1 \ll w_2$ acquires the form

$$w = \sqrt{2(i_1 - i_2)}, \tag{8.42}$$

we find the values of w for each value of p_2 (denote them by p_{II}, p_{III}, p_{IV}, etc.). The values of w thus obtained are plotted on the chart $w = f(p_2)$ shown in Fig. 8.8*b*; it is clear that when $p_2 = p_1$, we have $w = 0$. For states corresponding to the points at which each of the isobars p_{II}, p_{III}, p_{IV}, etc. intersects the isentrop, we find the velocity of sound in the gas. The values of a are taken either from tables containing the values of sonic velocity as a function of properties of state (such tables are compiled for a number of substances) or are calculated from the Laplace equation with the aid of the data on the adiabatic compressibility of this real gas. The lower the pressure on the isentrop, the smaller the velocity of sound in a real gas. Plot the values

of a for various values of p_2 (p_{II}, p_{III}, p_{IV}, etc.) on the graph $w = f(p_2)$. It is clear that the point at which the curves $w = f(p_2)$ and $a = \varphi(p_2)$ intersect will correspond to the pressure p_2 at which the nozzle exit velocity

Fig. 8.8

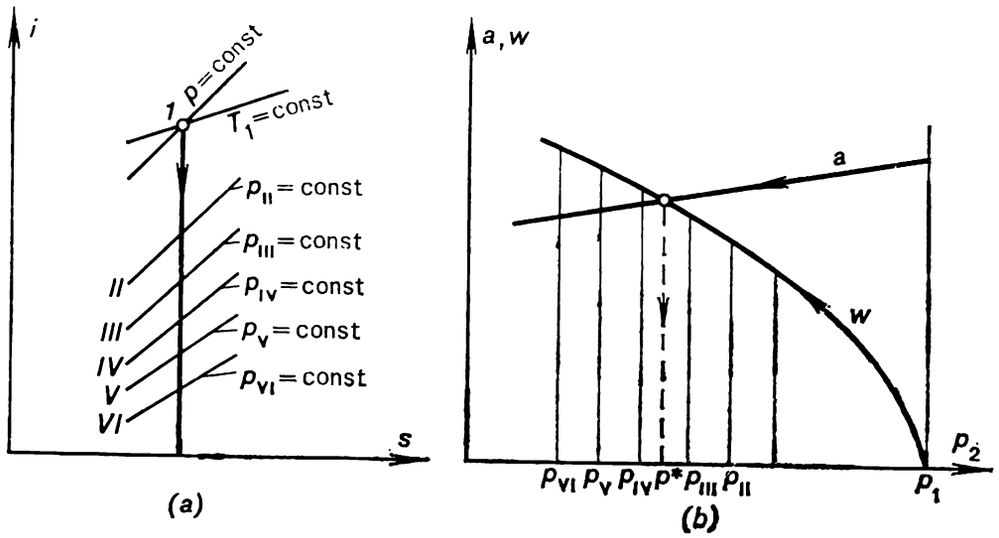

Fig. 8.9

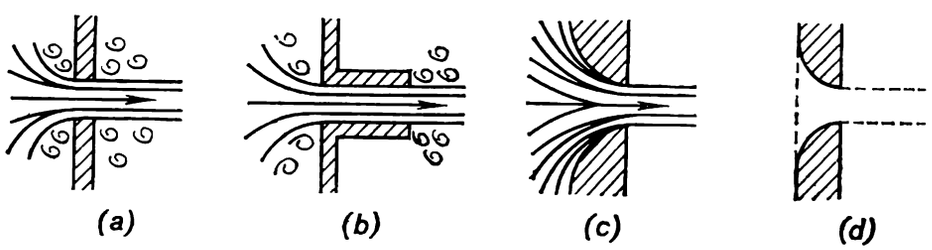

of the real gas (in reversible adiabatic flow) becomes equal to the local velocity of sound. Consequently, p_2 will be the critical flow pressure p^*.

The parameters of a real gas at the outlet from a nozzle such as specific volume, temperature, etc. can be found on the i-s diagram, since the position of point *2* in the diagram is known (Fig. 8.1).

A question may arise of why the kinetic energy of flow is increased with the aid of a special apparatus or nozzle. Why cannot this be done by letting the gas flow simply from a hole in a high-pressure reservoir, or from a constant cross-sectional area tube attached to this hole, calculating the cross-sectional area of the hole, or tube, from Eq. (8.33)? As was already mentioned, the thermodynamic relationships describing the flow through nozzles contain only one geometrical characteristic of the duct—the exit (outlet) cross-sectional area of the duct Σ_{ex} (for $w_1 \ll w_2$).

In fact, the tendency in designing real apparatuses, for converting the energy of a compressed gas into kinetic energy of flow, is to reduce to a minimum the irreversible frictional losses.

When a gas flows from a sharply-edged hole, multiple eddies form upstream and downstream from the hole, which causes a considerable loss of the energy of flow (Fig. 8.9*a*). Somewhat smaller but nevertheless considerable losses of flow energy take place when a gas flows not directly from a hole but from a constant cross-sectional area tube attached to this hole (Fig. 8.9*b*).

Therefore, the flow through a hole is replaced by flow through a duct-nozzle with a variable cross-section along its length (Fig. 8.9*c*). To reduce the hydraulic resistance offered to flow, the internal surface of the nozzle must be thoroughly processed.

A convergent nozzle can be regarded as a tube whose inlet section is made smooth, without sharp edges, and the constant cross-sectional area is of minimum length (Fig. 8.9*d*). In fact, as can be seen from Eq. (8.30), when a gas is in frictionless adiabatic flow through a tube of constant cross-sectional area* the velocity of the gas remains unchanged.

8.4 Transonic range. The Laval nozzle

We shall now consider some regularities concerning the flow in ducts.

With fluid (gas or liquid) in flow through a duct, the following equation is valid for any section of the duct:

$$G = \frac{\Sigma w}{v}, \tag{8.43}$$

where G is the constant mass flow (discharge) of gas through the duct, Σ the cross-sectional area of the duct, and v the specific volume of gas in the given section of the duct. Previously, Eq. (8.43) was applied to the exit area of a nozzle in the form of Eq. (8.30).

From the considerations of flow continuity, it is clear that with steady-state flow the mass rate of fluid flow is the same for any section of the flow, i.e.,

$$\frac{\Sigma w}{v} = \text{const}. \tag{8.44}$$

In hydrodynamics this equation is called the *continuity equation.*

Finding the logarithm of Eq. (8.44), we obtain:

$$\ln \Sigma + \ln w - \ln v = \text{const}. \tag{8.45}$$

Differentiating relationship (8.45), we get:

$$\frac{d\Sigma}{\Sigma} = \frac{dv}{v} - \frac{dw}{w}. \tag{8.46}$$

Equation (8.46) is the continuity equation in differential form.

Equation (2.73), valid for frictionless flow at $l_{\text{mech}} = 0$ and $dh = 0$,

$$w\,dw = -v\,dp,$$

will be presented in the form

$$\frac{dw}{w} = -\frac{v}{w^2}\,dp. \tag{8.47}$$

For reversible adiabatic (s = const) flow, in accordance with Eq. (7.44),

$$\frac{dv}{v} = -\frac{dp}{kp}. \tag{8.48}$$

---

* If there is no friction and $l_{\text{mech}} = 0$, then with gas in adiabatic flow in a tube of constant cross-sectional area, gas pressure and, consequently, its specific volume do not change along the tube.

Substituting equations (8.47) and (8.48) into equation (8.46), we obtain

$$\frac{d\Sigma}{\Sigma} = \frac{kpv - w^2}{kpw^2}\, dp. \tag{8.49}$$

Taking Eq. (8.24) into account, we get for relation (8.49) the following form:

$$\frac{d\Sigma}{\Sigma} = \frac{a^2 - w^2}{kpw^2}\, dp \tag{8.50}$$

or, which is the same,

$$\frac{d\Sigma}{\Sigma} = \frac{1}{kp}\left(\frac{1}{M^2} - 1\right) dp, \tag{8.50a}$$

where $M = w/a$ is the so-called *Mach number** (the ratio of the velocity of flow to the local velocity of sound). The quantity $M < 1$ corresponds to subsonic flow ($w < a$), and $M > 1$ corresponds to supersonic flow ($w > a$).

Equation (8.50a) relates the change of the cross-sectional area of a duct (in the event of adiabatic frictionless flow without mechanical work transfer) with the change of pressure in a flow and the Mach number M. Substituting the value of dp from Eq. (2.73) into Eq. (8.50), we get an equation relating the change of the cross-sectional area of a duct with the change in the velocity of flow and the Mach number:

$$(M^2 - 1)\frac{dw}{w} = \frac{d\Sigma}{\Sigma}. \tag{8.51}$$

It follows from Eq. (8.50a) that at subsonic velocities of flow ($M < 1$) convergence of the duct ($d\Sigma < 0$) corresponds to a drop in flow pressure along the duct ($dp < 0$), i.e. resembles an ordinary convergent nozzle. Equation (8.51) indicates that in this case (when $M < 1$) flow velocity increases ($dw > 0$) as the duct converges, as was to be expected.

Table 8.2 Shapes of ducts for various patterns of flow

Type of flow	Type of duct	
	Nozzle (acceleration of flow, drop in pressure along the flow)	Diffuser (deceleration of flow, increase in pressure along the flow)
Subsonic flow ($M < 1$)	Convergent	Divergent
Supersonic flow ($M > 1$)	Divergent	Convergent

But if the duct diverges ($d\Sigma > 0$), subsonic flow velocity decreases ($dw < 0$) and flow pressure increases ($dp > 0$) along the duct. Divergent ducts used for the stagnation of subsonic flow, i.e. to convert kinetic energy of flow into the potential energy of a compressed gas, are called diffusers and are applied widely in the most diverse branches of engineering.

Equations (8.50a) and (8.51) permit us to draw important conclusions for the case of supersonic fluid flow ($M > 1$), too.

* Named after the Austrian physicist E. Mach.

It follows from these equations that at $M > 1$ fluid flow through a divergent duct ($d\Sigma > 0$) is accompanied by a decrease in pressure along the flow ($dp < 0$) and by a rise in velocity ($dw > 0$) and, vice versa, a supersonic flow decelerates ($dw < 0$) in a convergent duct ($d\Sigma < 0$) and flow pressure increases ($dp > 0$). Thus, the shapes of the nozzle and diffuser intended for a supersonic flow "change places", the supersonic nozzle is a divergent duct, and the supersonic diffuser is a convergent duct.

The results of analyzing Eqs. (8.50a) and (8.51) are compiled in Table 8.2.

This analysis makes it clear how to affect a further acceleration of a flow which at $p_m \leqslant p^*$ acquired the velocity of sound at the exit of a convergent

Fig. 8.10

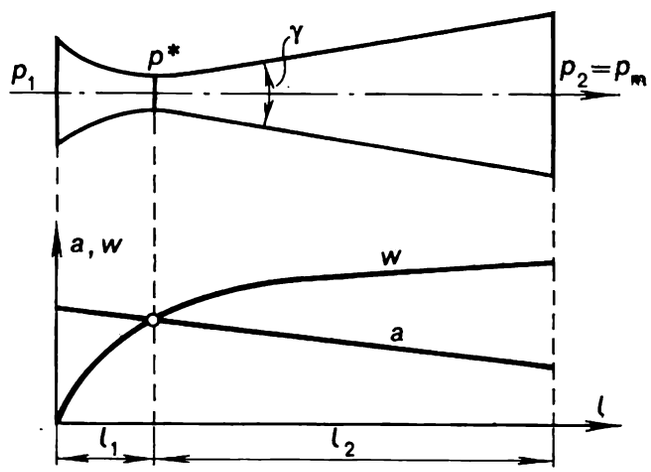

nozzle. For this purpose the nozzle should be shaped so that the duct converges until the pressure in the duct equals the critical pressure p^*. It will be recalled that in this section flow velocity equals the local velocity of sound. Downstream from this section the duct should be divergent. Therefore, the flow will become supersonic and further accelerated in the divergent part of the nozzle. Thus, from the pressure at the inlet of the nozzle p_1 to the pressure of the medium (back pressure) $p_m < p^*$ the entire pressure drop will be used to accelerate the flow, and not only a fraction of the pressure drop from p_1 to p^* realized in a subsonic convergent nozzle.

Such a combined nozzle, consisting of convergent and divergent sections, was first used to ensure supersonic velocities of flow by the Swedish engineer Carl G.P. de Laval (patented 1889). Consequently, nozzles of this type are called *Laval nozzles*.

The sectional view of a Laval nozzle is illustrated in Fig. 8.10. The same illustration shows velocity distribution in the flow and the distribution of the local velocities of sound along the nozzle.

The convergent part of a Laval nozzle is calculated in exactly the same way as an ordinary subsonic convergent nozzle. The section of minimum cross-sectional area, referred to as the *throat of the nozzle*, is determined on the basis of a given G with the aid of an equation similar to Eq. (8.30):

$$\Sigma_{min} = \frac{Gv_{min}}{a}, \tag{8.52}$$

where a is the local velocity of sound.

The velocity of gas at the exit from a Laval nozzle is determined from Eqs. (8.9) or (8.42); for an ideal gas Eqs. (8.28) or (8.29) apply.

The exit area of the nozzle is determined from Eq. (8.30):

$$\Sigma_{ex} = \frac{Gv_2}{w}. \tag{8.53}$$

The specific volume of gas in the nozzle exit, v_2, can be found for an ideal gas from the equation of the adiabat (8.27) in terms of the known values of p_1, v_1 and p_2:

$$v_2 = \left(\frac{p_1}{p_2}\right)^{1/k} v_1. \tag{8.54}$$

Given the above considerations, both the convergent and divergent parts of the nozzle are selected of minimum length. The length of the divergent, supersonic part of the nozzle, usually tapered, is selected so that the angle of divergence of the nozzle (denoted by γ in Fig. 8.10) does not exceed 12°; larger angles of divergence threaten flow separation from the walls of the duct.

The Laval nozzle is calculated so that the nozzle exit pressure p_2 is equal to the pressure of the medium, or back pressure, p_m. The operating conditions of a nozzle involving a back pressure differing from the calculated pressure p_2 are referred to as off-design operating conditions.

8.5 Adiabatic flow with friction

Now let us consider flow through nozzles with friction between the fluid and walls of the duct. This adiabatic flow is of paramount practical importance since, under real conditions, the flow of a fluid (gas or liquid) in ducts is always accompanied by a certain loss of energy due to friction, the viscosity of the fluid, roughness of duct walls, etc.

The process of flow is assumed to be adiabatic, i.e. it is assumed that there is no heat exchange with the surroundings. At the same time, it is clear that the process is irreversible, since frictional heat is released during the flow, q_{fr}, and flow entropy increases in accordance with the relationship

$$ds = \frac{dq_{fr}}{T}. \tag{8.55}$$

Let us examine how fluid flow with friction is represented on the *i-s* and *T-s* diagrams (Fig. 8.11).

If the flow were reversible, i.e. without friction, the process would be represented on the *i-s* diagram by the section of the isentrop $s_1 = s_2 = \text{const}$, confined between the isobars p_1 and p_2 (between points *1* and *2*), and the nozzle exit velocity w would be determined by the difference in enthalpies $(i_1 - i_2)$. As a result of the irreversible frictional losses in the process of flow the entropy of the gas increases and the actual adiabat deviates from the isentrop to the right (Fig. 8.11*a*)*. Further, inasmuch as a gas naturally expands in both frictional and frictionless flow to the same pressure at the

* The representation of the irreversible adiabat on the *i-s* diagram is hypothetical, since, as was repeatedly noted, only the curves of reversible processes can be represented on the diagrams of state.

exit from the nozzle, p_2, it is clear that the point corresponding to real frictional flow through the nozzle will lie on the same isobar but to the right of point *2* (point *2*r pertains to the process of real frictional fluid flow), since $s_{2r} > s_2$. In the event of frictional flow the enthalpy of the fluid at the nozzle exit is denoted by i_{2r}. Since on the *i-s* diagram the slope of the isobars is positive,

$$i_{2r} > i_2 \tag{8.56}$$

and, thus, a smaller enthalpy difference ($i_1 - i_{2r}$) "is realized" in frictional flow, compared to the case of frictionless reversible flow. It follows that the gas exit velocity will be smaller with frictional flow; let us denote this

Fig. 8.11

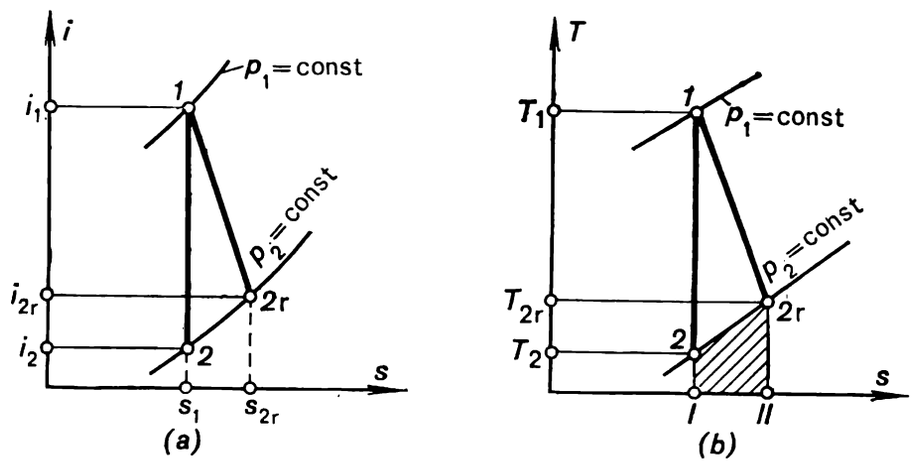

velocity by w_r. Since

$$w_r < w, \tag{8.57}$$

we can write

$$w_r = \varphi w, \tag{8.58}$$

where φ is the *velocity coefficient* lesser than one. It is known from practice that for properly finished and correctly shaped nozzles the velocity coefficient φ falls within 0.95-0.98.

The energy of the flow lost to overcome friction (denote this loss by ΔE_{fr}) can be expressed as the decrease in the kinetic energy of flow at the exit of the nozzle; in frictionless flow

$$\Delta E_{fr} = \frac{w^2 - w_r^2}{2}. \tag{8.59}$$

Thus, taking into account Eq. (8.58), we have:

$$\Delta E_{fr} = (1 - \varphi^2)\frac{w^2}{2}. \tag{8.60}$$

The quantity $(1 - \varphi^2)$, usually denoted by ξ, is called the *energy loss coefficient*:

$$\xi = 1 - \varphi^2. \tag{8.61}$$

Introducing this notation, we write Eq. (8.59) in the form

$$\Delta E_{fr} = \xi \frac{w^2}{2}. \tag{8.62}$$

On the other hand, inasmuch as [see Eq. (8.42)]

$$w = \sqrt{2(i_1 - i_2)}$$

and, naturally,

$$w_r = \sqrt{2(i_1 - i_{2r})}, \tag{8.63}$$

it is clear that the quantity ΔE_{fr} can be expressed as follows:

$$\Delta E_{fr} = i_{2r} - i_2. \tag{8.64}$$

Finally, taking into account (8.42), for Eq. (8.62) we have:

$$\Delta E_{fr} = \xi (i_1 - i_2). \tag{8.65}$$

Equating the right-hand sides of Eqs. (8.64) and (8.65), we obtain:

$$i_{2r} = i_2 + \xi (i_1 - i_2). \tag{8.66}$$

For real ducts the coefficients φ and ξ cannot, of course, be determined thermodynamically.

The process of adiabatic fluid flow is represented on the *T-s* diagram in the following way. For a reversible adiabatic flow the states of the fluid corresponding to the entrance into the nozzle (point *1*) and exit from the nozzle (point *2*) lie on the isentrop $s_1 = s_2 = \text{const}$ (Fig. 8.11*b*), just as on the *i-s* diagram. The curve of a real adiabatic fluid flow with friction slopes to the right, as on the *i-s* diagram (*1-2*r); it is clear that the area below the curve *1-2*r represents precisely the work performed to overcome the forces of friction l_{fr}, turning irreversibly into heat q_{fr} which is added to the gas [it is precisely this heating because of the heat of friction that explains the increase in temperature of the gas at the nozzle exit for frictional flow, as compared with reversible fluid flow, $T_{2r} > T_2$ (Fig. 8.11*b*)]. In fact, it follows from Eq. (8.55) that

$$q_{fr} = \int_{s_1}^{s_{2r}} T\,ds; \tag{8.67}$$

this integral is calculated along the adiabat *1-2*r.

It can be seen from the *T-s* diagram that the area below the section of the isobar *2-2*r (shaded area in Fig. 8.11*b*) represents the loss in kinetic energy of flow due to friction, ΔE_{fr}. In fact, inasmuch as points *1* and *2*r lie on the isobar, this area is equal to the integral $\int_{T_2}^{T_{2r}} T\,ds$.

Since it follows from the equation

$$T\,ds = di - v\,dp$$

that in an isobaric (constant-pressure, $dp = 0$) process

$$T\,ds = di, \tag{8.68}$$

we have:

$$\int_{T_2}^{T_{2r}} T\,ds = i_{2r} - i_2. \tag{8.69}$$

Comparing the areas *I-2-1-2*r-*II-I* and *I-2-2*r-*II-I*, we see that the loss of kinetic energy of flow due to friction, ΔE_{fr}, represents only a fraction of the heat released as a result of friction. The other part of the heat of friction, represented on the *T-s* diagram by the area *1-2-2*r-*1*, is added to the working gas and converts again into work.

Thus, the relationship

$$i_{2r} - i_2 < q_{fr} \tag{8.70}$$

is always valid.

The loss due to irreversibility as a result of friction is represented only by the shaded area *I-2-2*r-*II-I*. It follows that the shape of the curve *1-2*r, representing a hypothetical irreversible adiabat, is insignificant in analyzing the process of frictional fluid flow.

In summary, it will be emphasized again that a reversible (i.e. frictionless) adiabatic process of fluid flow is described by the following three major equations, (8.8), (8.10a) and (8.15), respectively:

$$\frac{w_2^2 - w_1^2}{2} = i_1 - i_2,$$

$$\frac{w_2^2 - w_1^2}{2} = \int_{p_2}^{p_1} v\,dp,$$

$$i_1 - i_2 = \int_{p_2}^{p_1} v\,dp;$$

each of the three equations is a corollary to the other two.

For frictional adiabatic flow these equations undergo the following transformation.

Equation (8.8) is true not only for a reversible adiabatic flow but also for an adiabatic flow with friction. Recalling the notations adopted in this paragraph, Eq. (8.8) becomes

$$\frac{w_{2r}^2 - w_1^2}{2} = i_1 - i_{2r}. \tag{8.71}$$

From Eq. (2.72),

$$w\,dw = -v\,dp - dl_{fr},$$

it follows that

$$\frac{w_{2r}^2 - w_1^2}{2} = \int_{p_2}^{p_1} v\,dp - l_{fr}; \tag{8.72}$$

for frictional flow this equation is similar to Eq. (8.10a), valid for frictionless fluid flow.

Like (8.10a), Eq. (8.72) describes not only adiabatic fluid flow, but also any other type of flow, since the initial differential equations (2.73) and (2.72) were derived in Chapter 2 for any fluid flow. The nature, or pattern, of the flow manifests itself in these equations in the curve along which the integral of the available work is calculated.

For frictional adiabatic flow ($q_{ext} = 0$, $q = q_{fr}$), Eq. (2.44) gives:

$$di = v\,dp + dq_{fr}. \tag{8.73}$$

Thus,

$$i_{2r} - i_1 = \int_{p_1}^{p_2} v\,dp + q_{fr}, \tag{8.74}$$

or, which is the same,

$$i_1 - i_{2r} = \int_{p_2}^{p_1} v\,dp - q_{fr}. \tag{8.74a}$$

Allowing for the fact that $q_{fr} = l_{fr}$, we come to the conclusion that each of the three equations, (8.71), (8.72) and (8.74a), results from the other two equations.

One more fact of importance will be noted: the values of available work, obtained from Eq. (8.15) for adiabatic frictionless fluid flow and from Eq. (8.77a) for adiabatic frictional fluid flow, are not equal. To prove the validity of this assertion, we shall subtract Eq. (8.77a) from Eq. (8.15) and get:

$$i_{2r} - i_2 = \left(\int_{p_2}^{p_1} v\,dp\right)^{rev} - \left(\int_{p_2}^{p_1} v\,dp\right)^{fr} + q_{fr}. \tag{8.75}$$

Allowing for the inequality (8.70), we obtain

$$\left(\int_{p_2}^{p_1} v\,dp\right)^{fr} > \left(\int_{p_2}^{p_1} v\,dp\right)^{rev}. \tag{8.76}$$

Thus, the work available in a frictional adiabatic flow exceeds that available in reversible adiabatic flow. Taking (8.64) into account, Eq. (8.75) yields the following expression for the difference between these two quantities:

$$\left(\int_{p_2}^{p_1} v\,dp\right)^{fr} - \left(\int_{p_2}^{p_1} v\,dp\right)^{rev} = q_{fr} - \Delta E_{fr}. \tag{8.77}$$

8.6 General regularities of flow. The influence inversion law

It will be emphasized again that the conclusions drawn in Secs. 8.3 to 8.5 are valid for fluid flow in the absence of mechanical work and with $dh = 0$ [instead of the general expression (2.70) special cases were used: Eq. (2.73) was used for flow without friction and Eq. (2.72) for flow with friction], with the flow being assumed to be adiabatic [this assumption was the "basis" of the conclusions drawn by virtue of the fact that they were made with the aid of Eqs. (8.3), (8.14) and (8.73), which are true only for adiabatic processes].

Let us now consider Eq. (2.70) which describes the most general case of flow,

$$w\,dw = -v\,dp - g\,dh - dl_{mech} - dl_{fr}.$$

An analysis of this equation leads to interesting conclusions concerning the possible methods of flow acceleration.

The value of dp in the right-hand side of the equation can be generally expressed as follows:

$$dp=\left(\frac{\partial p}{\partial v}\right)_s dv+\left(\frac{\partial p}{\partial s}\right)_v ds. \tag{8.78}$$

Allowing for Eq. (4.12), we can present the partial derivative $(\partial p/\partial s)_v$ in the form

$$\left(\frac{\partial p}{\partial s}\right)_v=-\left(\frac{\partial p}{\partial v}\right)_s\left(\frac{\partial v}{\partial s}\right)_p. \tag{8.79}$$

Inasmuch as

$$\left(\frac{\partial v}{\partial s}\right)_p=\left(\frac{\partial v}{\partial T}\right)_p\left(\frac{\partial T}{\partial s}\right)_p \tag{8.80}$$

and, as follows from Eq. (4.45),

$$\left(\frac{\partial T}{\partial s}\right)_p=\frac{T}{c_p},$$

from Eq. (8.79) we obtain:

$$\left(\frac{\partial p}{\partial s}\right)_v=-\left(\frac{\partial p}{\partial v}\right)_s\left(\frac{\partial v}{\partial T}\right)_p\frac{T}{c_p}. \tag{8.81}$$

Taking the above relation into account, we find from Eq. (8.78) that

$$dp=\left(\frac{\partial p}{\partial v}\right)_s\left[dv-\left(\frac{\partial v}{\partial T}\right)_p\frac{T}{c_p}ds\right]. \tag{8.82}$$

It follows from Laplace's equation (8.23) that

$$\left(\frac{\partial p}{\partial v}\right)_s=-\frac{a^2}{v^2}. \tag{8.83}$$

Let us express the differential present in Eq. (8.82) in terms of the continuity equation (8.46):

$$dv=v\left(\frac{d\Sigma}{\Sigma}+\frac{dw}{w}\right), \tag{8.84}$$

and the differential of the entropy, in terms of the general equation (3.115):

$$ds=\frac{dq}{T}.$$

Bearing in mind that, according to equation (2.66),

$$dq=dq_{\text{ext}}+dq_{\text{fr}}, \tag{8.85}$$

where q_{ext} is the heat added to the flow from outside, and q_{fr} the frictional heat equivalent to the work due to friction, l_{fr}. We obtain from Eq. (8.85):

$$ds=\frac{dq_{\text{ext}}+dq_{\text{fr}}}{T}. \tag{8.86}$$

Allowing for Eqs. (8.83), (8.84) and (8.86), we find from Eq. (8.82) that

$$v\,dp=-a^2\left[\frac{d\Sigma}{\Sigma}+\frac{dw}{w}-\frac{1}{v}\left(\frac{\partial v}{\partial T}\right)_p\frac{dq_{\text{ext}}+dq_{\text{fr}}}{c_p}\right]. \tag{8.87}$$

Substituting the expression for $v\,dp$ into Eq. (2.70) and collecting the terms containing dw in the left-hand side of the equation, we

obtain:

$$(M^2-1)\frac{dw}{w}=\frac{d\Sigma}{\Sigma}-\frac{1}{vc_p}\left(\frac{\partial v}{\partial T}\right)_p dq_{\text{ext}}-\frac{1}{a^2}dl_{\text{mech}}-$$
$$-\frac{1}{vc_p}\left(\frac{\partial v}{\partial T}\right)_p dq_{\text{fr}}-\frac{1}{a^2}dl_{\text{fr}}-\frac{g}{a^2}dh. \quad (8.88)$$

Taking into account that

$$dq_{\text{fr}}=dl_{\text{fr}},$$

we obtain:

$$(M^2-1)\frac{dw}{w}=\frac{d\Sigma}{\Sigma}-\frac{1}{vc_p}\left(\frac{\partial v}{\partial T}\right)_p dq_{\text{ext}}-\frac{1}{a^2}dl_{\text{mech}}-$$
$$-\left[\frac{1}{vc_p}\left(\frac{\partial v}{\partial T}\right)_p+\frac{1}{a^2}\right]dl_{\text{fr}}-\frac{g}{a^2}dh. \quad (8.88a)$$

Let us analyze the relationship obtained.

When $q_{\text{ext}}=0$, $l_{\text{mech}}=0$, $l_{\text{fr}}=0$ and $dh=0$, Eq. (8.88a) reduces, as expected, to the already known Eq. (8.51).

For the case of frictionless flow in a pipe of constant cross-sectional area ($d\Sigma=0$) in the absence of mechanical work and friction and the work of elevation ($dh=0$) being zero, but with addition or rejection of heat from the flow, we obtain from Eq. (8.88a):

$$(M^2-1)\frac{dw}{w}=-\frac{1}{vc_p}\left(\frac{\partial v}{\partial T}\right)_p dq_{\text{ext}}. \quad (8.89)$$

Inasmuch as c_p is always greater than zero and $(\partial v/\partial T)_p$ is usually greater than zero, from Eq. (8.89) we expect that the addition of heat ($dq_{\text{ext}}>0$) to a subsonic flow ($M<1$) results in acceleration of the flow ($dw>0$), and the rejection of heat causes deceleration of flow. This is evident, since when heat is added, the gas expands in the flow and its velocity increases. It will be interesting to note that a subsonic liquid flow characterized by $(\partial v/\partial T)_p=0$ (for instance, the flow of water at a temperature $t<4°C$) will decelerate if heat is added.

Accordingly, as can be seen from Eq. (8.89), an addition of heat to a supersonic flow ($M>1$) will result in deceleration of the flow while rejection of heat will cause its acceleration.

These conclusions are the basis of the principle of the *thermal nozzle**, a pipe of constant cross-sectional area in which the flow is accelerated by adding or rejecting heat through the walls of the pipe (Fig. 8.12). It is clear that heat must be added to the flow until flow velocity reaches the velocity of sound; further acceleration of the flow is then ensured by rejecting heat from the supersonic flow.

It should be noted that heat can be added to or rejected from the flow not only through the walls of the conduit but also by the heat released due to chemical reactions proceeding in the gas flow.

For the case of flow in a pipe of constant cross-sectional area ($d\Sigma=0$) in the absence of heat transfer ($dq_{\text{ext}}=0$) and friction, and also if $dh=0$, but with mechanical work performed by the flow (or transferred to it from

---

* The nozzles previously considered are called *geometrical nozzles*, since according to Eq. (8.51), flow velocity is changed by varying the cross-sectional area of the nozzle.

an external source of work), we obtain from Eq. (8.88a):

$$(M^2-1)\frac{dw}{w} = -\frac{1}{a^2}\,dl_{\text{mech}}. \tag{8.90}$$

It follows from Eq. (8.90) that under these conditions the subsonic flow ($M < 1$), performing mechanical work (for instance, rotating a turbine wheel)

Fig. 8.12

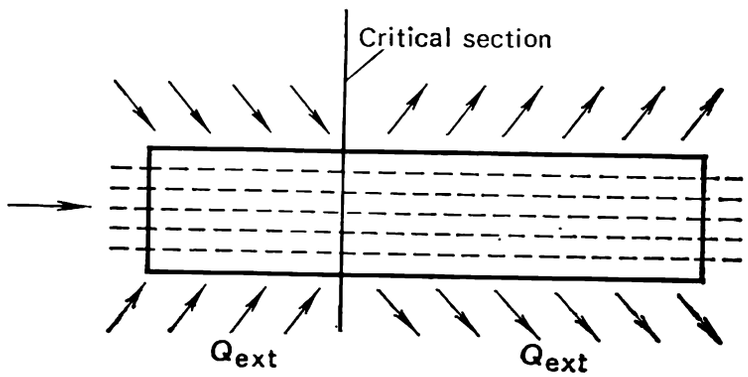

Fig. 8.13

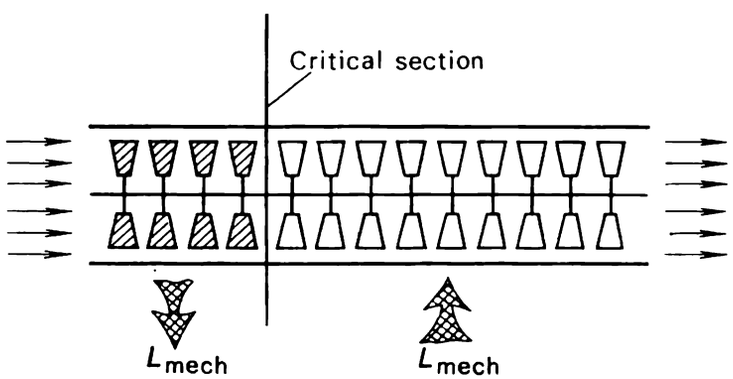

is accelerated ($dw > 0$). Accordingly, transfer of mechanical work to the flow from the outside will decelerate the flow; this result is somewhat unexpected. It means, for instance, that an impeller placed in the flow and rotated by an external source of work will not accelerate but decelerate the flow. The transfer of mechanical work to a supersonic flow ($M > 1$) will cause acceleration of the flow. The flow will decelerate if it performs work.

This phenomenon is used in the *mechanical nozzle*, a thermally-insulated pipe of constant cross-sectional area in which a frictionless subsonic flow is accelerated by the work produced by the flow on the blades of the turbine wheels arranged inside the tube; after the flow reaches the velocity of sound it passes to the blades of a supercharger (blower) rotated from an external source of work. The diagram of a mechanical nozzle is illustrated in Fig. 8.13. In principle, it is possible to create an analogous mechanical nozzle for an electrically conducting liquid accelerating the subsonic flow by producing work in a magnetohydrodynamic generator (see Chapter 12) and transferring work from a magnetohydrodynamic pump after the velocity of sound is attained. It will be stressed that this argument assumes a tube of constant cross-sectional area.

It should be noted that in principle it is possible to attain supersonic velocities with the aid of *combined nozzles* whose subsonic part is taken from one type of nozzle (geometrical, thermal or mechanical), and whose supersonic part is taken from another type of nozzle. For example, the subsonic part can be a convergent geometrical nozzle and the supersonic part can be a pipe of constant cross-sectional area with heat added from the outside.

A related case of flow is the process of flow in an inclined pipe ($dh \neq 0$) of constant cross-sectional area with $dq_{\text{ext}} = 0$, $dl_{\text{mech}} = 0$, and $dl_{\text{fr}} = 0$. Equation (8.88a) gives

$$(M^2-1)\frac{dw}{w} = -\frac{g}{a^2}dh. \tag{8.91}$$

It follows from this equation that an upward moving subsonic ($M < 1$) flow of gas ($dh > 0$) accelerates ($dw > 0$), and a supersonic flow of $M > 1$ downward moving gas ($dh < 0$) decelerates ($dw < 0$).

These conclusions are important in analyzing the flow of natural gas from wells (of constant cross-sectional area).

For adiabatic flow in a pipe of constant cross-sectional area at $dl_{\text{mech}} = 0$ and $dh = 0$ but with a loss in energy to overcome friction, Eq. (8.88a) reduced to

$$(M^2-1)\frac{dw}{w} = -\left[\frac{1}{vc_p}\left(\frac{\partial v}{\partial T}\right)_p + \frac{1}{a^2}\right]dl_{\text{fr}}. \tag{8.92}$$

Frictional flow stands by itself compared with the case of flow considered above: if all the other differentials present on the right-hand side of Eq. (8.88a), $d\Sigma$, dq_{ext}, dl_{mech}, dh, can be both positive and negative, then, since the work expended to overcome friction can only be positive, the value of dl_{fr} is more than zero.

It follows from Eq. (8.92) that under these conditions a subsonic ($M < 1$) frictional flow accelerates ($dw > 0$). This conclusion is not unexpected: inasmuch as friction converts into work, this case is equivalent to the previous case of flow with heat transfer from the outside; a subsonic flow in a pipe of constant cross-sectional area was shown to accelerate if heat is transferred to the flow.

It is clear that frictional adiabatic flow may accelerate to the velocity of sound in a pipe of constant cross-sectional area but will be unable to accelerate to supersonic velocity. For this purpose heat would have to be rejected from the flow, while the heat of friction is always transferred to the flow (both in subsonic and supersonic flow). The impossibility to transcend from subsonic to supersonic flow in the given conditions is called the *crisis of flow*.

One more type of nozzle should be mentioned, the *discharge nozzle*. Its principle of operation is as follows. If we introduce the notion of the density of flow in a duct, equal to the mass rate of gas flow per unit cross-sectional area of the duct

$$j = \frac{G}{\Sigma}, \tag{8.93}$$

then it follows from an analysis of the ordinary geometrical Laval nozzle that the value of j increases ($d\Sigma < 0$ for $G = \text{const}$) in the subsonic (diverging) part of the nozzle, reaches a maximum in the critical area (throat) of the nozzle, then decreases as it passes through the supersonic (diverging) part of the nozzle ($d\Sigma > 0$ for $G = \text{const}$).

In a pipe of constant cross-sectional area (Σ = const) the same effect can be attained by changing the mass rate of flow G, by blowing in or sucking out this gas through perforations provided in the side surface of the pipe (the discharge nozzle, Fig. 8.14). If the discharge is increased by blowing in gas, the density of flow j, as can be seen from Eq. (8.93), will increase ($dG > 0$ for Σ = const), equivalent to the convergence of a geometrical nozzle. If a fraction of the gas after it reaches sonic velocity is withdrawn through the side surface of the pipe, then flow density j will diminish ($dG < 0$ for Σ = = const) and the flow will continue to accelerate; this is equivalent to the divergence of a geometrical nozzle. In other words, by changing the discharge through the pipe of constant cross-sectional area, flow conditions can be ensured similar to those in a geometrical nozzle (variable cross-section nozzle) for G = const.

Fig. 8.14

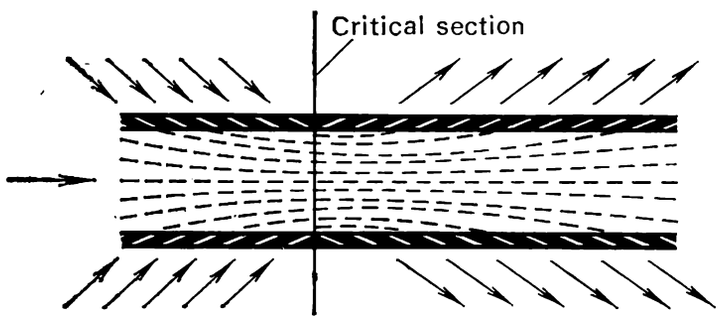

This conclusion can be reached analytically. It follows from Eq. (8.43) that with a variable discharge

$$dv = v\left(\frac{d\Sigma}{\Sigma} + \frac{dw}{w} - \frac{dG}{G}\right). \tag{8.94}$$

Substituting Eq. (8.94) in Eq. (8.82) to replace the expression (8.84) from Eq. (2.70) and for $q_{\text{ext}} = 0$, $q_{\text{fr}} = 0$, $l_{\text{mech}} = 0$, $dh = 0$, and Σ = = const we have:

$$(M^2 - 1)\frac{dw}{w} = -\frac{dG}{G}. \tag{8.95}$$

It follows from Eq. (8.95) that when $M < 1$, flow velocity increases with an increase in the discharge ($dw > 0$ for $dG > 0$), and to increase the velocity of flow when $M > 1$ the discharge should be reduced ($dw > 0$ for $dG < 0$).

As can be seen from the foregoing, the sign of the influence which should be applied to a flow to accelerate it (addition or rejection of heat, transfer of work, mass, etc.) changes with a change in velocity from subsonic to supersonic in the throat of the nozzle. Thus, for example, on the subsonic section of a thermal nozzle $dq_{\text{ext}} > 0$ (heat is added), and on the supersonic section $dq_{\text{ext}} < 0$ (heat is rejected). Equation (8.88a), permitting us to determine the sign of the influence, depending on the Mach number, is called the *influence inversion law* (or *principle*)*.

Equations similar to Eq. (8.88a) for flow velocity can also be derived for the pressure, temperature and specific volume of a gas (liquid) in flow.

* This equation was derived and analyzed by the Soviet scientist L. A. Vulis.

8.7 Adiabatic stagnation temperature

Completing our examination of processes of adiabatic flow, let us pause to consider the *adiabatic total heat*, or *stagnation*, *temperature*. It will be recalled that from Eq. (8.8) the following equality is valid for any two points in an adiabatic fluid flow:

$$i_1 + \frac{w_1^2}{2} = i_2 + \frac{w_2^2}{2}, \tag{8.96}$$

or, which is the same, for the entire flow:

$$i + \frac{w^2}{2} = \text{const}. \tag{8.96a}$$

If a gas in flow can be considered to be ideal and its heat capacity is assumed constant, then, inasmuch as the enthalpy (measured from the fixed point 0 K) of such a gas is equal to

$$i = c_p T,$$

Eq. (8.96) can be presented in the form

$$T + \frac{w^2}{2c_p} = \text{const}. \tag{8.97}$$

It can be seen from Eq. (8.97) that if a reversible adiabatic flow of an ideal gas of a constant heat capacity and a temperature T is brought to rest ($w = 0$), the temperature of such a flow, brought to rest adiabatically, is referred to as the adiabatic total head, or stagnation, temperature $T_{\text{a.s.}}$ expressed by

$$T_{\text{a.s.}} = T + \frac{w^2}{2c_p}. \tag{8.98}$$

It can be seen from equation (8.98) that $T_{\text{a.s.}} > T$ is always true.

Inasmuch as for an ideal gas

$$k = \frac{c_p}{c_v} \tag{2.54}$$

and, in accordance with Mayer's formula (2.54),

$$c_p - c_v = R,$$

it follows that

$$c_p = R\frac{k}{k-1}, \tag{8.99}$$

and Eq. (8.98) can be presented in the following form:

$$T_{\text{a.s.}} = T + \frac{k-1}{2kR} w^2. \tag{8.100}$$

Finally, since, in accordance with Eq. (8.25),

$$a = \sqrt{kRT},$$

expression (8.100) for the total head, or stagnation, temperature can be transformed as follows:

$$T_{\text{a.s.}} = T\left(1 + \frac{k-1}{2} M^2\right). \tag{8.101}$$

The concept of the adiabatic stagnation temperature is widely used in various aero- and gas-dynamics calculations. Any measuring instrument placed in a fluid flow will show a temperature close to the adiabatic stagnation temperature.

9

Methods to analyze the efficiency of thermopower plants

9.1 Cycle efficiency

The general principles of the cycles of heat engines and some of the general regularities common for these cycles were already formulated in Chapter 3. Knowing the laws governing various thermodynamic processes, we can embark on a detailed examination of the cycles and the general layouts of actual thermopower plants. Below, all thermopower plants with a forward cycle (i.e. a cycle in which the work produced is transferred to an external source) will be referred to as *thermopower plants* proper, and installations operating in a reverse cycle (i.e. a cycle in which the heat expended is transferred from an outside source) will be called *refrigerating* plants.

The cycles of thermopower plants are usually subdivided into three main groups: gas thermopower cycles, vapour thermopower cycles and cycles of direct conversion of heat into electric power.

These groups will be examined in detail in Chapters 10-12.

Such a classification of cycles is based on the following. The common characteristic of all gas thermopower, or simply gas, cycles is that throughout the entire cycle the working medium exists in the same state of aggregation as a gas. The state of the working medium is far from the saturation line and, because comparatively low pressures are combined with rather high (compared to the critical) temperatures, it can be regarded as an ideal gas with an accuracy quite sufficient for a qualitative analysis.

The distinguishing feature of the second large group of thermopower cycles (vapour, or steam) is that the state of aggregation of the working medium nsed in the cycle changes from a liquid to a two-phase mixture (wet steam)

and to superheated steam. The states of superheated steam are usually so close to the saturation region that the laws for an ideal gas are not applicable.

The third group unites the cycles which differ somewhat from the first two groups and in which heat is converted directly into electric power.

To evaluate the efficiency of a thermopower plant we must answer two basic questions:

(1) What is the magnitude of the efficiency of a reversible heat power cycle, what factors affect the efficiency and what measures should be undertaken to raise the efficiency?

(2) How great are the irreversible losses suffered in a real cycle in a plant, how are these losses distributed among the individual components of the cycle and, thus, what parts of the heat power cycle should be perfected so as to reduce the degree of irreversibility of the cycle (and, therefore, to increase its efficiency)?

Consequently, the cycles of thermopower plants and refrigerating plants will be analyzed in two stages: we shall first analyze the reversible cycle and then the real cycle, taking into account the main sources of irreversibility.

The term *thermal efficiency* (η) will be used below to denote the efficiency of a reversible cycle, and the efficiency of a real irreversible cycle will be referred to as the internal efficiency of the cycle, η_i^c.

The term *internal* indicates that the efficiency involved is that of the cycle proper; this efficiency characterizes the degree of perfection of the processes which the working medium undergoes, but it fails to reflect the degree of imperfection of the individual component units of an installation (the degree of perfection is characterized by the so-called *effective efficiencies*, which shall be introduced below).

Therefore,

$$\eta = \frac{l_c^r}{q_1} = \frac{q_1 - q_2^r}{q_1} = 1 - \frac{q_2^r}{q_1}, \tag{9.1}$$

$$\eta_i^c = \frac{l_c^{real}}{q_1} = \frac{q_1 - q_2^{real}}{q_1} = 1 - \frac{q_2^{real}}{q_1}, \tag{9.2}$$

where the subscripts "r" and "real" refer to a reversible and real irreversible (actual) cycles, respectively.

The degree of perfection of reversible cycles is fully characterized by the thermal efficiency of a cycle, compared with the thermal efficiency of the Carnot cycle realized in the same temperature interval. Some of the most widely used methods of analysis of these cycles are described in the following section. The effectiveness of real cycles can be evaluated by the magnitude of the internal efficiency, determined from relationship (9.2). But the quantity η_i^c by itself fails to give an idea about the degree of irreversibility of the cycle. Thus, in analyzing real irreversible cycles the concept of the relative efficiency of the cycle is used. It is determined in the following way. Equation (9.2) for the internal efficiency

$$\eta_i^c = \frac{l_c^{real}}{q_1}$$

can be presented in the form

$$\eta_i^c = \frac{l_c^{real}}{l_c^r} \frac{l_c^r}{q_1}.$$

Denoting

$$\eta^{c}_{i.r.} = \frac{l_c^{real}}{l_c^{r}} \tag{9.3}$$

and, taking into account Eq. (9.1), we obtain:

$$\eta^{c}_{i} = \eta^{c}_{i.r.}\eta \tag{9.4}$$

The quantity $\eta^{c}_{i.r.}$ is called the *internal relative efficiency of a cycle.* It shows to what extent a real cycle is less perfect than a reversible cycle (i.e. what fraction of the thermal efficiency η belongs to the internal efficiency of a real cycle).*

In addition to the irreversible losses suffered in the processes which the working medium undergoes during a cycle (these losses are accounted for by the internal relative efficiency of the cycle, $\eta^{c}_{i.r.}$), the operation of an actual thermopower plant involves much loss due to the irreversibility of the thermal, mechanical and electrical processes in individual components of the entire power plant. These losses include the frictional losses in turbine bearings, the frictional losses suffered while the piston reciprocates in the cylinder, heat losses in steam pipelines, electrical losses in the electric generator, etc. Taking these losses into account, the efficiency of a thermopower plant as a whole is characterized by the magnitude of the *brake thermal efficiency* η^{p}_{b}, which is the ratio of the work transferred from the thermopower plant to an external consumer to the amount of heat transferred to the plant (due to the inevitable loss, usually only a fraction of this heat is taken up by the working medium).

Another way of evaluating the efficiency of a thermopower plant is to use the concept of system availability introduced in Chapter 3. Calculating the loss of system availability in each of the main components of the plant, it is possible to evaluate the components of the availability loss for the entire system "high-temperature source—heat power plant—low-temperature source", and then find the efficiency. Both the entropy and the exergy methods to evaluate the availability loss of a system will be considered in detail below.

The results obtained in analyzing the efficiency of real irreversible cycles do not depend quantitatively (from the viewpoint of the first law of thermodynamics) on the method or analysis applied. However, as will be shown below, the methods based on calculating the loss of availability permit us to conduct an important qualitative analysis and to detect in many cases the basic sources for cycle irreversibility.

9.2 Comparison methods for thermal efficiencies of reversible cycles

As was mentioned above, the degree of perfection of an arbitrary reversible cycle is determined by the proximity of its thermal efficiency to that of the reversible Carnot cycle realized between the extreme temperatures of the given cycle. The quantities $\eta^{r.c.c.}$ (efficiency of the reversible Carnot cycle) and $\eta^{a.r.c.}$ (efficiency of an arbitrary reversible cycle) can be compared by

* To emphasize the difference between η_i and $\eta_{i.r.}$ the quantity η_i is sometimes also called the *internal absolute efficiency of a cycle.*

calculating the magnitudes of these efficiencies. Such a method of comparison, however, is not always convenient, since determining q_1 and q_2 often involves cumbersome calculations. That is why comparative analysis is usually conducted using one of the two following methods.

The first uses the area ratio of the cycle, the ratio of the area of the given cycle on a *T-s* diagram (cross-shaded area in Fig. 9.1*a*) to the area of the corresponding (i.e. realized in the same entropy and temperature intervals) Carnot cycle (area *1-2-3-4-1* in Fig. 9.1*a*). Of the two cycles realized in the same temperature interval the cycle with the greater area ratio has a larger thermal efficiency.

The second method is based on the concept of the mean temperatures at which heat is added and rejected in the cycle.

Fig. 9.1

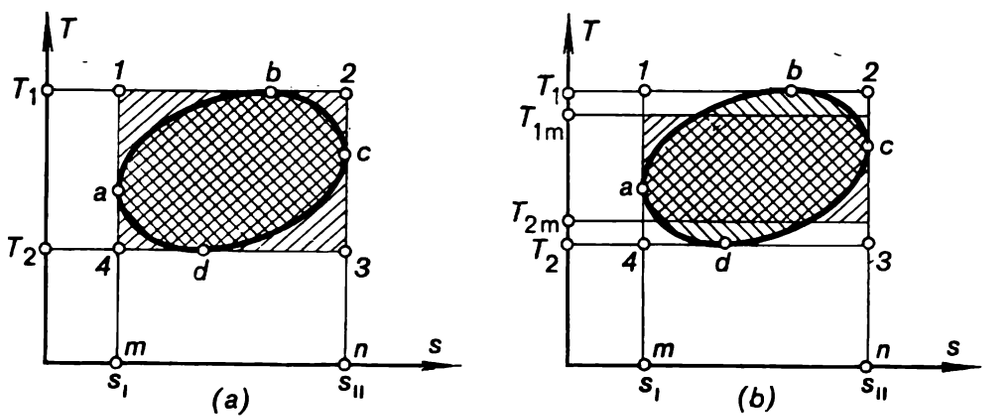

Consider the arbitrary reversible cycle illustrated in Fig. 9.1*b*. The heat added to the working medium in this cycle (q_1) is represented by the area *mabcnm* and determined by the expression

$$q_1 = \int_{(abc)} T\,ds. \tag{9.5}$$

The heat rejected (q_2) is depicted by the area *madcnm* and its magnitude is determined from the following relation:

$$q_2 = \int_{(adc)} T\,ds. \tag{9.6}$$

Let us introduce the concept of the mean temperatures at which heat is added and rejected in the cycle. The *mean temperature* at which heat is added to the working medium is determined from the relationship

$$T_{1m} = \frac{\int_{(abc)} T\,ds}{s_{II} - s_I} \tag{9.7}$$

and the mean temperature at which heat is rejected is determined by

$$T_{2m} = \frac{\int_{(adc)} T\,ds}{s_{II} - s_I}. \tag{9.8}$$

It can be easily seen from these definitions that the mean temperature of heat addition (rejection) is the temperature of such an isothermal process for which the addition (rejection) of heat q_1 (q_2) results in the same change in entropy as in a real process. Indeed, it follows from Eqs. (9.5) and (9.7) that

$$q_1 = T_{1m}(s_{II} - s_I), \tag{9.9}$$

and from Eqs. (9.6) and (9.8)

$$q_2 = T_{2m}(s_{II} - s_I). \tag{9.10}$$

Substituting these expressions for q_1 and q_2 into Eq. (3.13) we obtain the following formula for the thermal efficiency of the given reversible cycle:

$$\eta = \frac{T_{1m} - T_{2m}}{T_{1m}} \tag{9.11}$$

Thus, the thermal efficiency of an arbitrary reversible cycle realized between temperatures T_1 and T_2 is equal to the thermal efficiency of a reversible Carnot cycle realized in a narrower temperature interval, from T_{1m} to T_{2m} (Fig. 9.1*b*).

The higher the mean temperature of heat addition, T_{1m}, and the lower the mean temperature of heat rejection, T_{2m}, the higher the thermal efficiency of the cycle is.

The integrals in Eqs. (9.7) and (9.8) are calculated by numerical or graphical integration. In this connection, the temperatures T_{1m} and T_{2m} are sometimes referred to as *mean planimetric temperatures.*

An increase in the mean heat-addition temperature and a reduction of the mean heat-rejection temperature are equivalent to an increase in the area ratio of the cycle. The two methods will be used below in analyzing reversible cycles.

9.3 Method of efficiencies in the analysis of irreversible cycles

As was already shown in Sec. 9.1, the internal efficiency of a real irreversible cycle can be expressed in the form

$$\eta_i^c = \eta_{i.r.}^c \eta$$

where η is the thermal efficiency of a reversible cycle, and $\eta_{i.r.}$ the internal relative efficiency of a real cycle.

Let us examine the magnitude of the latter.

No thermopower plant can be constructed without a component in which work is performed by the expansion of the working medium (in turbine plants, the turbine; in internal combustion engines, the cylinder and piston during the expansion stroke; in jet engines, the propelling nozzle, and so on) and also without a component in which the working medium is compressed by the work transferred from the outside (compressor, diffuser, pump, the cylinder of an internal combustion engine during the compression stroke, etc.).

As was mentioned above, the actual processes of compression or expansion undergone by gases or liquids are always accompanied by irreversible losses. Thus, for instance, it was shown in Chapter 8 that in the process

of frictional adiabatic flow only a fraction of the enthalpy difference available is converted into the kinetic energy of flow (and, hence, into work). If the available difference in the enthalpies is equal to $(i_1 - i_2)$, the difference $(i_1 - i_{2r})$ converts into work, with i_{2r} being greater than i_2. The difference $(i_{2r} - i_2)$ converts irreversibly into heat of friction. The internal relative efficiency of an engine, therefore, is equal to:

$$\eta_{\text{i.r.}}^{\text{exp}} = \frac{l_{\text{exp}}^{\text{real}}}{l_{\text{exp}}^{\text{theor}}} \tag{9.12}$$

where $l_{\text{exp}}^{\text{real}}$ and $l_{\text{exp}}^{\text{theor}}$ are the actual and theoretical work of expansion.

By analogy the work transferred from an external source (denoted by $l_{\text{comp}}^{\text{real}}$) to the device of a heating plant in which the working medium is compressed (compressor, diffuser, pump) will always be greater, due to irreversible losses, than the work which would be expended to realize compression if there were no such losses (we shall denote this theoretical work by $l_{\text{comp}}^{\text{theor}}$)*.

The ratio of these quantities, characterizing the degree of reversibility of the process in the apparatus compressing the working medium, will be referred to as the internal relative efficiency of this apparatus:

$$\eta_{\text{i.r.}}^{\text{comp}} = \frac{l_{\text{comp}}^{\text{theor}}}{l_{\text{comp}}^{\text{real}}} \tag{9.13}$$

The magnitude of the internal relative efficiencies of machines and apparatuses is determined experimentally.

Since the work output of a cycle, l_c, is equal to the difference between the work performed in the course of expansion, l_{exp}, and the work transferred to the apparatus in which the working medium is compressed, l_{comp}, the work performed in a reversible cycle can be expressed as

$$l_c^{\text{rev}} = l_{\text{exp}}^{\text{theor}} - l_{\text{comp}}^{\text{theor}}, \tag{9.14}$$

and the work performed in an irreversible cycle as

$$l_c^{\text{real}} = l_{\text{exp}}^{\text{real}} - l_{\text{comp}}^{\text{real}}, \tag{9.15}$$

or, taking into account Eqs. (9.12) and (9.13),

$$l_c^{\text{real}} = l_{\text{exp}}^{\text{theor}} \eta_{\text{i.r.}}^{\text{exp}} - \frac{l_{\text{exp}}^{\text{theor}}}{\eta_{\text{i.r.}}^{\text{comp}}}, \tag{9.16}$$

In accordance with Eq. (9.3), the expression for the internal relative efficiency of the cycle takes the form

$$\eta_{\text{i.r.}}^{c} = \frac{l_{\text{exp}}^{\text{theor}} \eta_{\text{i.r.}}^{\text{exp}} - \dfrac{l_{\text{comp}}^{\text{theor}}}{\eta_{\text{i.r.}}^{\text{comp}}}}{l_{\text{exp}}^{\text{theor}} - l_{\text{comp}}^{\text{theor}}}. \tag{9.17}$$

If the amount of work expended to drive the apparatus in which the working medium is compressed l_{comp}, is insignificant, compared to the amount of work done as the working medium expands in the machine, l_{exp}

* The difference $(l_{\text{comp}}^{\text{real}} - l_{\text{comp}}^{\text{theor}})$ converts into heat of friction.

(as will be shown in Sec. 11.2, this is sometimes admissible for thermopower cycles with vapour as the working medium), it follows from Eq. (9.17) that

$$\eta_{\text{i.r.}}^{\text{c}} = \eta_{\text{i.r.}}^{\text{exp}}. \tag{9.18}$$

The internal efficiency of a cycle $\eta_{\text{i}}^{\text{c}}$, is determined by Eq. (9.4), which combined with Eq. (9.17) gives the following expression for the internal efficiency:

$$\eta_{\text{i}}^{\text{c}} = \frac{l_{\text{exp}}^{\text{theor}} \eta_{\text{i.r.}}^{\text{exp}} - \dfrac{l_{\text{comp}}^{\text{theor}}}{\eta_{\text{i.r.}}^{\text{comp}}}}{q_1}. \tag{9.19}$$

As was already mentioned, however, the internal absolute efficiency on a real cycle fails to fully characterize the effectiveness of a thermopower plant. The work done in the cycle is not equal to the work transferred to an external consumer; a fraction of the work performed is irreversibly spent in the form of mechanical, heat and electric power losses in the components of the plant. The magnitude of the losses in each of these components (mechanical losses in the engine, electrical and mechanical losses in the electric generator, heat losses in the combustion chamber and pipelines, etc.) is characterized by the magnitude of the brake thermal efficiency of that component (η_{b}). Multiplying the brake thermal efficiencies of the individual components of the plant and the internal absolute efficiency of the given cycle, we obtain the brake thermal efficiency of the entire thermopower plant:

$$\eta_{\text{b}}^{\text{p}} = \eta \eta_{\text{i.r.}}^{\text{c}} \prod_{j=1}^{n} \eta_{\text{b}(j)}, \tag{9.20}$$

where $\prod_{j=1}^{n} \eta_{\text{b}(j)}$ is the product of all brake thermal efficiencies characterizing the irreversible losses in the n components of the plant.

An example of calculating the brake thermal efficiency of a thermopower plant, expressed in terms of $\eta_{\text{i}}^{\text{c}}$ and of the brake thermal efficiencies of individual components of the plant, is given below in Sec. 11.3 for a steam-turbine power plant.

The brake thermal efficiency of a thermopower plant shows what fraction of the heat q_1 transferred to the plant (for instance, the heat released upon combustion of fuel or transferred from some other source of heat) is converted into work transferred to an outside consumer:

$$l_{\text{use}} = \eta_{\text{b}}^{\text{p}} q_1. \tag{9.21}$$

The concept of work transferred to an outside consumer may have a different meaning for each particular case. For instance, in a heat and electric power plant it is the electric power transmitted into the power system, in an automobile (reciprocating) engine it is the work transmitted to the axle of the automobile, etc.

It is clear that the quantity

$$\Delta q = (1 - \eta_{\text{b}}^{\text{p}})\, q_1 \tag{9.22}$$

represents the fraction of the heat q_1 not converted into work. The quantity Δq includes both the heat q_2 transferred to the low-temperature source (sink)

and the losses of heat Δq_{loss}, due to the irreversibility of processes proceeding in the individual elements of the plant, the loss of heat by radiation, etc. It is easy to find the magnitude of Δq_{loss}; it is clear that

$$\Delta q_{loss} = l_c^{rev} - l_{use}, \tag{9.23}$$

where l_c^{rev} is the work done in a reversible cycle, and l_{use} the work done in an actual installation.

Taking into account Eqs. (9.1) and (9.21), Eq. (9.23) yields

$$\Delta q_{loss} = (\eta - \eta_b^p)\, q_1. \tag{9.24}$$

From the point of view of thermodynamic perfection, everything possible should be undertaken to raise the brake thermal efficiency of a thermopower plant. It should be emphasized, however, that this must not always be understood too literally. In fact, economically an increase in efficiency stems from the tendency to save fuel (as the source of heat q_1 added in the cycle). In a number of cases, however (as will be illustrated in Chapter 10), the application of measures to increase the brake thermal efficiency of the cycle (and, consequently, of the overall brake thermal efficiency of the entire thermopower plant) involves considerable complication and a rise in the cost of the plant. Thus the lesser expenditures to save fuel will involve greater expenditures to construct the thermopower plant. Whether it is expedient to construct a plant with a higher efficiency but requiring greater capital investments can only be determined after a thorough technical and economic analysis, which is beyond the scope of thermodynamics.

9.4 Entropy calculation method for the loss of availability in irreversible cycles

In Sec. 3.10, we introduced the important concept of the loss of system availability due to the irreversibility of the processes which the system undergoes.

The loss of system availability*, or the *availability loss*, ΔL was defined as the difference between the maximum possible work which a given system can produce if the processes in the system are reversible (l_{use}^{max}) and the work which the same system will perform if the system undergoes irreversible processes (l_{use}):

$$\Delta L = l_{use}^{max} - l_{use}. \tag{9.25}$$

It was shown in Sec. 3.10 that the availability loss is determined from the Gouy-Stodola equation (3.188),

$$\Delta L = T_0\, \Delta s_{sys},$$

where T_0 is the temperature of surroundings, and Δs_{sys} the increase in system entropy due to the irreversible processes in it.

As was already mentioned above, this equation is also applicable to an isolated system consisting of two heat sources and a working medium realizing a cyclic process, i.e. to a thermopower plant.

If the high-temperature source of such a system rejects heat q_1, the maximum amount of work that can be obtained from this heat is equal to the work performed in a reversible Carnot cycle in the temperature interval

* The magnitudes of useful work and of the loss of availability are taken here per unit mass of the working medium (i.e. specific) but to distinguish availability from work, the former is denoted by L.

$T_{h.t.}$ and $T_{l.t.}$. In fact, as was shown in Chapter 3, compared with any other cycle in the same temperature interval, a reversible Carnot cycle has the highest thermal efficiency.

Hence, the maximum useful work which could be obtained from heat q_1 in such a system (the availability due to the transfer of heat q_1) is equal to

$$l_{use}^{max} = \eta^{r.c.c.} q_1, \tag{9.26}$$

where $\eta^{r.c.c.}$ is the thermal efficiency of a reversible Carnot cycle. In accordance with Eq. (3.32),

$$\eta^{r.c.c.} = \frac{T - T_0}{T}$$

and, consequently,

$$l_{use}^{max} = q_1 \left(1 - \frac{T_0}{T}\right), \tag{9.27}$$

where T_0 is the temperature of the low-temperature source (surroundings), and T the temperature of the high-temperature source.

But if the same system undergoes an actual irreversible cycle, the useful work l_{use} performed is equal to

$$l_{use} = q_1 \eta_b^p \tag{9.28}$$

where η_b^p is the brake thermal efficiency of the plant.

Taking Eqs. (9.26) and (9.28) into account, Eq. (9.25) gives:

$$\Delta L = q_1 (\eta^{r.c.c.} - \eta_b^p). \tag{9.29}$$

Thus, the loss of availability in the thermopower plant as a whole can be calculated from the known values of $\eta^{r.c.c.}$ and η_b^p.

It is, however, inexpedient to calculate the loss of availability in this way, for we cannot then evaluate the efficient performance of individual elements of the installation. Therefore the following calculation method is more promising.

The total change in system entropy, ΔS_{sys}, is equal to the algebraic sum of the changes in entropy of each of the n elements of the system:

$$\Delta S_{sys} = \sum_{j=1}^{n} \Delta S_j. \tag{9.30}$$

Multiplying both sides of (9.30) by the temperature of the surroundings and taking Eq. (3.188) into account, we obtain:

$$\Delta L_{sys} = \sum_{j=1}^{n} \Delta L_j. \tag{9.31}$$

Thus, the availability loss of the entire system is equal to the sum of the availability losses in individual elements of this system.

It should be noted that as far as the analysis of the availability loss is concerned, it is immaterial whether or not the process considered is designed to produce work, or whether the system is closed or open. It is clear that when no work is done in a given process ($l_{use} = 0$), as follows from Eq. (9.25)

$$\Delta L = l_{use}^{max}.$$

It should also be noted that Eq. (9.25) refers to processes by which the source of work comes into equilibrium with the surroundings. But when a process is realized between two states in which the source of work is not in equilibrium with the surroundings, Eq. (9.25) will take a somewhat different form (it will be understood that the Gouy-Stodola equation is true for any processes). Now, consider an isolated system, consisting of body *1* at a temperature T_1, body *2* at a temperature T_2, with $T_1 > T_2$, and surroundings at a temperature T_0. Let a certain amount of heat Q be transferred between bodies *1* and *2* without any work performed. Since the difference between the temperatures of bodies *1* and *2* is finite, this process will be irreversible. It is clear that in the process the entropy of body *1* will diminish by $\Delta S_1 = -Q/T_1$, and the entropy of body *2* will increase by $\Delta S_2 = Q/T_2$*. The total change in entropy in the part of the system considered (bodies *1* and *2*) amounts to

$$\Delta S_{1,2} = \Delta S_1 + \Delta S_2 = \frac{Q}{T_2} - \frac{Q}{T_1}. \tag{9.32}$$

As a result of the transfer of heat Q from the temperature level T_1 to the lower temperature level T_2, the availability of this amount of heat Q diminishes. In accordance with Eq. (9.27) the availability of the heat Q on the temperature level T_1 in the system considered (temperature of surroundings T_0) is

$$l_{1\,\text{use}}^{\max} = Q\left(1 - \frac{T_0}{T_1}\right), \tag{9.33}$$

and on the temperature level T_2,

$$l_{2\,\text{use}}^{\max} = Q\left(1 - \frac{T_0}{T_2}\right). \tag{9.34}$$

Consequently, the loss of availability due to the irreversible transfer of heat Q from body *1* to body *2* will be equal to

$$\Delta L = l_{1\,\text{use}}^{\max} - l_{2\,\text{use}}^{\max} = T_0\left(\frac{Q}{T_2} - \frac{Q}{T_1}\right), \tag{9 35}$$

or, taking into account the above relation for $\Delta S_{1,2}$,

$$\Delta L = T_0\,\Delta S_{1,2}, \tag{9.36}$$

which, as expected, is the Gouy-Stodola equation (3.188) for this special case.

Let us now consider the case when the process of transfer of heat Q from body *1* to body *2* is reversible. It will be recalled that the only mode of reversible heat transfer from one body to another at constant temperatures and a finite temperature difference is by a reversible Carnot cycle. This cycle results in a fraction of the heat Q converted into work:

$$l_{12\,\text{use}} = Q\,\frac{T_1 - T_2}{T_1}, \tag{9.37}$$

where $(T_1 - T_2)/T_1$ is the thermal efficiency of reversible Carnot cycle realized in the temperature interval $T_1 - T_2$. The fraction of the heat Q, irreversibly transferred to body *2* (i.e. the heat Q_2 in this cycle) will

* For the sake of simplicity it is assumed that the temperatures of bodies *1* and *2* do not change as a result of the transfer of heat Q.

amount to

$$Q_2 = Q - l_{12\,\text{use}} = Q\frac{T_2}{T_1}. \tag{9.38}$$

The availability amount of heat Q_2 at the temperature level T_2 will be equal to

$$l_{2\,\text{use}}^{\max} = Q_2\left(1 - \frac{T_0}{T_2}\right) = Q\frac{T_2}{T_1}\left(1 - \frac{T_0}{T_2}\right). \tag{9.39}$$

The availability of heat Q at the temperature level T_1 will, of course, be the same as in (9.33):

$$l_{1\,\text{use}}^{\max} = Q\left(1 - \frac{T_0}{T_1}\right).$$

It follows that the loss of availability due to reversible transfer of heat Q from body *1* to body *2* will amount to

$$l_{1\,\text{use}}^{\max} - l_{2\,\text{use}}^{\max} = Q\frac{(T_1 - T_2)}{T_1} \tag{9.40}$$

or, taking (9.37) into account,

$$l_{1\,\text{use}}^{\max} - l_{2\,\text{use}}^{\max} = l_{12\,\text{use}}, \tag{9.41}$$

i.e. the loss of availability is equal to the work done in the irreversible process 1-2.

The magnitude of the loss of availability in such a process, equals zero: the availability decreased, but useful work was obtained at the expense of the decrease. The conclusion that in this case there is no loss of availability can also be arrived at with the aid of the Gouy-Stodola equation. In fact, as was shown on page 96 the entropy of a thermodynamic system undergoing a reversible Carnot cycle remains unchanged:

$$\Delta S_{1,2} = 0.$$

With this taken into account, Eq. (3.188) yields the following for this case:

$$\Delta L = 0. \tag{9.42}$$

Finally, when heat is transferred from body *1* to body *2* by realizing an irreversible cycle, the loss of availability will amount to:

$$\Delta L = (l_{1\,\text{use}}^{\max} - l_{2\,\text{use}}^{\max}) - l_{12\,\text{use}} \tag{9.43}$$

where $l_{12\,\text{use}}$ is the work done in the irreversible cycle.

In the irreversible cycle

$$l_{1\,\text{use}}^{\max} - l_{2\,\text{use}}^{\max} > l_{12\,\text{use}}. \tag{9.44}$$

In calculating the loss of availability in each component element of an installation, we obtain data which is of great help in analyzing the efficiency of the installation. The values of ΔL_j indicate the elements of the installation in which the irreversible processes contribute the greatest part of the quantity ΔL_{sys}. Hence, the processes in these elements first of all require perfection.

The loss of availability in each component of an installation is calculated with the aid of Eq. (3.188) in terms of the known values of T_0 and ΔS_j.

Various methods are used to calculate the increase in entropy ΔS_j due to the irreversibility of the processes in individual components of an installation.

In actual power (vapour and gas) cycles two types of irreversibility are encountered: irreversibility stemming from the presence of friction as the working medium flows through the components of an installation, and irreversibility caused by the presence of a final temperature difference in the processes of heat transfer from the working medium to the heat sources (and vice versa)*. In the discussion below, a cycle in which the flow of the working medium does not cause frictional losses will be referred to as an internally reversible cycle, and as a fully reversible cycle if, in addition, the realization of the cycle does not involve irreversible losses due to external heat transfer (heat transfer between the high-temperature and low-temperature heat sources). With this in mind, a cycle in which there are no frictional losses associated with the flow of the working medium but which is realized in a temperature interval narrower than the temperature interval between the high-temperature and low-temperature heat sources will be internally reversible, but externally it will be irreversible. Meanwhile, maximum work would be produced by this system (high-temperature source—working medium—low-temperature source) if heat were added and rejected at a temperature of the working medium equal to the temperatures of the heat sources. The presence of a finite temperature difference leads to losses of system availability. Therefore, in analyzing the power losses in a thermopower plant, these availability losses must also be taken into account.

It follows from the preceding section that the method of efficiencies accounts for losses due only to the internal irreversibility of a cycle, but in no way accounts for the losses traced to the finite difference between the temperatures of the working medium and heat source. The method of efficiencies is, nevertheless, widely used in heat engineering calculations because external irreversibility does not affect the qualitative results of analysis: while the internal irreversibility of a cycle results in a fraction of the heat added to the working medium leaving the cycle in the form of heat losses, the external irreversibility does not cause heat losses. The same amount of heat will be transferred from the high-temperature source to the working medium irrespective of the difference between their temperatures. The external irreversibility leads to a loss of availability (incomplete utilization of the temperature potential of the heat, which with a more perfectly thermodynamically organized process of heat addition would permit obtaining a greater amount of work).

In this connection, let us consider, for example, the heat transfer processes taking place in the furnace of a steam boiler, a part of a power plant. The furnaces of up-to-date, heavy-duty boiler units are very effective: their heat losses are minimum and their efficiency exceeds 95%. Hence, from the point of view of the first law of thermodynamics these furnaces are perfect devices. Let us consider the boiler furnace from the viewpoint of the second law of thermodynamics.

In the furnace, the process of heat transfer from the high-temperature source (hot combustion products), having, for instance, a temperature of about

* In this case we deal only with the cycle proper of a thermopower plant and ignore the mechanical and electrical losses in individual components of the plant (friction in bearings, electrical losses, etc.).

2200 K, to the heat-absorbing surfaces of the waterwall tubes, through which a water-vapour emulsion circulates at a pressure of about 9806 kPa (100 kgf/cm^2) and a saturation temperature of 583 K, proceeds with a strongly pronounced irreversibility. The loss of availability in this system, in which irreversible transfer of heat q takes place, is calculated with the aid of the Gouy-Stodola equation (3.188). For this case $T_0 = 10\ ^\circ\mathrm{C} = 283$ K (the temperature of the low-temperature source, or surroundings) and $\Delta S = 29\,300 \times \left(\frac{1}{583} - \frac{1}{2200}\right) = 36.8$ kJ/(kg-K) if $q = 29\ 300$ kJ/kg (7000 kcal/kg) [q is the heating value of 1 kg of comparison fuel]. In accordance with Eq. (3.188), $\Delta L = 283 \times 36.8 = 10\ 410$ kJ/(kg fuel), or 2.9 kW-h/(kg fuel), i.e. the loss of availability reduced to 1 kg of comparison fuel amounts to 2.9 kW-h.

Thus, a heat device which is highly effective from the viewpoint of the first law of thermodynamics happens to be imperfect from the point of view of the second law of thermodynamics. This imperfection is revealed by the entropy method of evaluating the efficiency of the components of a thermopower plant.

It follows that, as was already mentioned, unlike the method of efficiencies, the entropy method makes it possible to detect the sources, or origins, of irreversibility in the components of a thermopower plant.

Now let us compare Eq. (9.24) for the heat losses in the cycle of a thermopower plant (as was found above, due only to the external irreversibility of the processes in the plant),

$$\Delta q_{\mathrm{loss}} = q_1 (\eta - \eta_{\mathrm{b}}^{\mathrm{p}}),$$

with Eq. (9.29) for loss of availability in the plant (due not only to the internal but also to the external irreversibility),

$$\Delta L = q_1 (\eta^{\mathrm{r.C\ c.}} - \eta_{\mathrm{b}}^{\mathrm{p}}).$$

It should be emphasized here that $\eta^{\mathrm{r.C.c.}}$ means the thermal efficiency of a *completely* reversible Carnot cycle (realized in the temperature interval from $T_{\mathrm{h.t.}}$ to $T_{\mathrm{l.t.}}$).

It follows that

$$\Delta L - \Delta q_{\mathrm{loss}} = q_1 (\eta^{\mathrm{r.C.c.}} - \eta). \tag{9.45}$$

The additional loss of availability due to the external irreversibility of the cycle is proportional to the difference between the thermal efficiency of the most effective cycle, the completely reversible Carnot cycle, and the cycle considered.

In conclusion, let us introduce the concept of the *coefficient of availability* of a thermopower plant. We shall write Eq. (9.25) in the following form:

$$l_{\mathrm{use}} = l_{\mathrm{use}}^{\max} - \Delta L. \tag{9.46}$$

On the other hand, from Eq. (9.21).

$$\eta_{\mathrm{b}}^{\mathrm{p}} = \frac{l_{\mathrm{use}}}{q_1},$$

it is clear that

$$\eta_{\mathrm{b}}^{\mathrm{p}} = \frac{l_{\mathrm{use}}}{l_{\mathrm{use}}^{\max}} \frac{l_{\mathrm{use}}^{\max}}{q_1}$$

Substituting in the above expression the value of l_{use} from Eq. (9.46) and allowing for the fact that in accordance with Eq. (9.26) l_{use}^{max}/q_1 is equal to the thermal efficiency of a reversible Carnot cycle, we obtain:

$$\eta_b^p = \left(1 - \frac{\Delta L}{l_{use}^{max}}\right) \eta^{r.c.c} . \tag{9.47}$$

The quantity

$$\eta_{a.loss} = \frac{\Delta L}{l_{use}^{max}} \tag{9.48}$$

is called the *availability loss coefficient*; it shows the fraction of the availability which is lost due to the irreversibility of the processes in a thermopower plant. The quantity

$$\eta_{r.a.} = 1 - \frac{\Delta L}{l_{use}^{max}} = 1 - \eta_{a.loss} \tag{9.49}$$

is referred to as the *relative availability coefficient* (sometimes called the *energy utilization factor* or the *degree of thermodynamic perfection*) of a plant.

Taking the above notation into account we get from formula (9.47):

$$\eta_b^p = \eta_{r.a.} \eta^{r\ c.c} , \tag{9.50}$$

i.e. the absolute brake thermal efficiency of a thermopower plant can be expressed as the product of the relative availability coefficient of the system by the brake thermal efficiency of a reversible Carnot cycle realized in the temperature interval ($T_{h.t.}$, $T_{l.t.}$).

9.5 Exergy calculation method for availability losses

In Sec. 3.10 we introduced the concept of the maximum useful work (availability) of an isolated system consisting of a source of work and surroundings [see Eq. (3.177)]:

$$l_{use}^{max} = (U_1 - U_2) - T_0 (S_1 - S_2) - p_0 (V_2 - V_1),$$

where the subscripts "1" and "2" refer to the initial (non-equilibrium) and final (equilibrium) states of that system; U, S and V are the internal energy, entropy and volume of the source of work; and p_0 and T_0 are the pressure and temperature of the surroundings, equal to the pressure and temperature of the source of work in state *2*, when the source of work comes into thermodynamic equilibrium with the surroundings. The pressure of the source of work in the initial (non-equilibrium) state is denoted by p_1.

This definition is applicable to any isolated thermodynamic system.

In the entropy calculation method for the loss of availability considered above, the thermopower plant was regarded as an isolated system. Equation (9.29) was used to calculate the availability of the plant as a whole (to be more exact, the availability of the heat released by the high-temperature source). Next the losses of availability in individual elements of the plant were calculated, regarding the elements as parts of the isolated system; the degree of thermodynamic perfection of any of the component is then evaluated by

comparing the loss of availability in the particular element with the loss of availability of the entire system.

We may approach the analysis of the effective performance of thermopower plants in another way. Each element of a plant can be considered as an independent thermodynamic system (not isolated, of course, since the working medium flows through this element and there is heat and work transfer between it and other parts of the plant). The effective performance of the element can be evaluated by comparing the availability of the working medium (or heat) at the inlet to this element with the loss of availability due to the irreversibility of the processes proceeding in the element. Of course,

Fig. 9.2

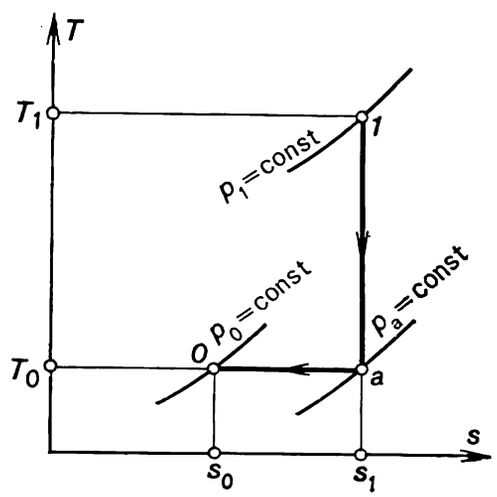

availability is evaluated, as before, in relation to the surroundings with parameters p_0 and T_0. The advantages of such an approach are that it permits an analysis of the thermodynamic perfection of an element of the thermopower plant without the necessity of making a preliminary estimate of the availability of the plant as a whole and of the availability losses in all the elements. To a certain extent this simplifies the calculation of the loss of availability.

Inasmuch as in most of the thermopower plants and refrigerating units we have a working medium which is in continuous flow (water and steam in steam-turbine plants, air and combustion products in gas-turbine plants, refrigerants in refrigerating units), in analyzing such plants and units, it is expedient to use the concept of the availability of flow processes.

Thus, consider a non-isolated, or open, system, consisting of a source of work, which is a working medium in flow at a pressure p_1 and temperature T_1, and surroundings (with parameters p_0 and T_0). We shall calculate the maximum useful work (i.e. the availability) done by the source of work in this system per unit mass of the working medium. The method used for deriving the calculation equation will differ from that selected for deriving Eq. (3.177) in Sec. 3.10*.

In Sec. 3.10 it was shown that a non-equilibrium system produces maximum useful work when all processes in the direction of system equilibrium are reversible. If the source of work is at a temperature T_1 and pressure p_1, and the parameters of the surroundings are T_0 and p_0 (T-s diagram in Fig. 9.2),

* This method can also be used to derive Eq. (3.177).

this source of work can be brought reversibly into equilibrium with the surroundings proceeding as follows. First, a reversible adiabatic process is realized; as a result, the temperature of the source of work diminishes from T_1 to T_0, and the pressure reduces from p_1 to p_a. An isothermal process is then realized at the end of which the pressure of the source of work becomes equal to p_0 because of the heat exchange with the surroundings. (This isothermal process is reversible, since while it proceeds the temperature of the source of work and that of the surroundings are the same and equal to T_0 and, consequently, heat transfer takes place at an infinitely small temperature difference, i.e. proceeds reversibly.) Any other process (or a combination of processes) realized between states *1* and *O* would be irreversible. In fact, any other process involves rejection of heat from the source of work, but since the initial temperature of the source of work (T_1) differs from the temperature of the surroundings (T_0), this rejection of heat will be irreversible.

The work done by the flow undergoing the reversible adiabatic process *1-a* is equal to

$$l_{1a}^{r} = i_1 - i_a. \tag{9.51}$$

It will be recalled that this enthalpy difference turns into the kinetic energy of flow, which can be then easily converted into different kinds of work. In accordance with the mathematical formulation of the first law of thermodynamics (2.64), for a flow,

$$q_{1a} = (i_a - i_1) + \frac{w_a^2 - w_1^2}{2},$$

in an adiabatic process ($q = 0$)

$$l_{1a}^{r} = \frac{w_a^2 - w_1^2}{2} = i_1 - i_a. \tag{9.52}$$

The work done by the flow in the reversible isothermal process *a-O* is determined by the following relation resulting from Eq. (2.64):

$$l_{a0}^{r} = (i_a - i_0) + q_{a0} \tag{9.53}$$

where q_{a0} is the heat rejected from the source of work (flow) in this isothermal process. In accordance with Eq. (7.23),

$$q_{a0} = T_0 (s_0 - s_a),$$

and consequently,

$$l_{a0}^{r} = (i_a - i_0) + T_0 (s_0 - s_a). \tag{9.54}$$

The work performed by the flow, due to the reversible change from state *1* into state *O*, is equal to the sum of the work performed in the reversible processes *1-a* and *a-O*:

$$l_{10}^{r} = l_{1a}^{r} + l_{a0}^{r}. \tag{9.55}$$

Thus, taking into account (9.51) and (9.54) and bearing in mind that $s_1 = s_a$, we obtain:

$$l_{10}^{r} = (i_1 - i_a) + (i_a - i_0) + T_0 (s_0 - s_1). \tag{9.56}$$

Inasmuch as the work involved in the reversible change of state of the source of work is equal to the maximum useful work (availability) of the flow, we can write*:

$$l_{\text{use}}^{\max} = (i_1 - i_0) + T_0 (s_0 - s_1). \tag{9.56a}$$

The specific availability of flow is referred to as the *exergy* of flow**, denoted by e:

$$e = (i - i_0) + T_0 (s_0 - s). \tag{9.56b}$$

It follows from the above equation that the exergy of flow can be determined unambiguously if the parameters of the flow (p and T) and the parameters of the surroundings (p_0 and T_0) are given.

The concept of exergy happens to be very convenient in analyzing the degree of the thermodynamic perfection of various heat apparatuses. In fact, let us consider a heat apparatus (for instance, a turbine) for which the inlet parameters of the working medium are p_1 and T_1; this working medium leaves the apparatus at a pressure p_2 and temperature T_2. In the apparatus, this flow performs useful work l_{use}. If the process in the apparatus is irreversible, then, consequently, the flow suffers a loss of availability, ΔL, in the apparatus. This loss of availability is, obviously, equal to

$$\Delta L = (e_1 - e_2) - l_{\text{use}}. \tag{9.57}$$

If the exergy of flow is e_1 at the inlet of the apparatus, and is equal to e_2 at the exit, the difference $(e_1 - e_2)$ is expended to perform useful work l_{use} and to cover losses due to irreversibility. If all the processes in this apparatus were reversible, there would be no availability loss ($\Delta L = 0$) and the flow would then perform maximum useful work

$$l_{12\,\text{use}}^{\max} = e_1 - e_2. \tag{9.58}$$

Indeed, if in an adiabatic flow the exergy diminishes between two sections of the flow (subscripts "1" and "2") by

$$\Delta e = e_1 - e_2,$$

then, taking Eq. (9.56b) into account we have:

$$e_1 - e_2 = (i_1 - i_2) + T_0 (s_2 - s_1).$$

---

* If we substitute in Eq. (9.55) the values of l_{1a}^{r} and l_{a0}^{r} not from Eqs. (9.51) and (9.54), which are true only for a flow, but from the general equation for the useful work of a system (i.e. for the work performed by a system, less the amount of work expended to compress the surroundings), then, since it follows from the first law of thermodynamics that for the reversible adiabatic process *1-a*

$$l_{1a\,\text{use}}^{\text{r}} = (u_1 - u_a) - p_0 (V_a - V_1)$$

and, correspondingly, for the reversible isothermal process *a-O*,

$$l_{a0\,\text{use}}^{\text{r}} = (u_a - u_0) + T (s_a - s_0) - p (V_0 - V_a),$$

we shall obtain Eq. (3.177).

** This term was suggested in 1956 and has only recently come into use. Previously, the specific availability was called the "mechanical availability", "maximum mechanical work", etc.

If this adiabatic flow is reversible, then $s_1 = s_2$ and, in accordance with Eq. (9.51),

$$e_1 - e_2 = l_{12}^{r},$$

i.e.

$$e_1 - e_2 = l_{use}^{max}.$$

But if the process develops with an increase in entropy, then the loss of availability due to irreversibility,

$$\Delta L = T_0 (s_2 - s_1),$$

Fig. 9.3

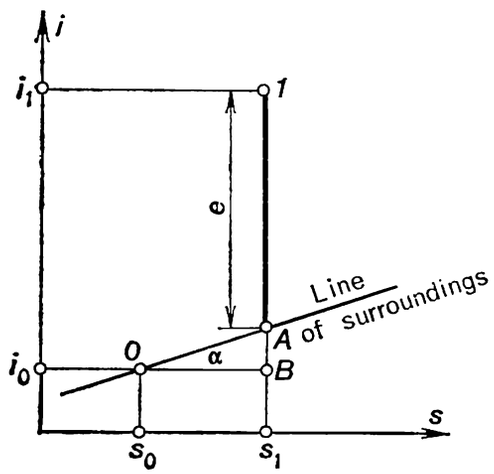

will, apparently, be equal to

$$\Delta L = (e_1 - e_2) - l_{use}.$$

This is precisely the main idea of the exergy method: the working medium enters the apparatus with an exergy e_1 and having performed useful work l_{use}, leaves the apparatus with an exergy e_2, with the availability loss, due to the irreversibility of the processes in the apparatus being determined from Eq. (9.57).

It should be emphasized that this method permits an evaluation of the degree of reversibility of the processes developing in any heat apparatus on the basis of an external characteristic, the difference between the inlet and exit exergies of the flow.

It follows from the definition of exergy given by Eq. (9.56b) that the exergy of a flow is determined unambiguously by the parameters of state of the flow (p and T) and the parameters of the surroundings (p_0 and T_0). Exergy, consequently, can be regarded as an original function of state of a non-equilibrium system consisting of a surrounding medium and a source of work represented by a flow*.

The exergy of flow is determined easily from the i-s diagram on which, as shown in Fig. 9.3, point *1* represents the state of a substance at a pressure p and temperature T, and point O, the state of the same substance at the pro-

* It should not be supposed that the concept of exergy is only applicable to a flow. In principle, we can consider the exergy not only of flow systems, but also of non-flow, closed systems.

perties of the surroundings (i.e. in equilibrium with the surroundings), at a pressure p_0 and temperature T_0. Hence, the section *1-B* is equal to the difference in the enthalpies $(i_1 - i_0)$.

A straight line is drawn from point O at an angle α. Since, in accordance with Eq. (4.42),

$$\left(\frac{\partial i}{\partial s}\right)_p = T, \tag{9.59}$$

on the *i-s* diagram $\tan \alpha = T$. The angle α is determined from the condition

$$\alpha = \text{arc tan } T_0.$$

The line drawn through point O at this angle is called the *line of surroundings*. It follows from Eq. (9.59) that the line of surroundings is tangent to the isobar $p_0 = \text{const}$ at the point corresponding to the state of the surroundings. It is clear from Fig. 9.3 that the length of section *O-B* is equal to the entropy difference $(s_1 - s_0)$, and the length of section *A-B* is equal to $(s_1 - s_0)$ $\tan \alpha$, i.e. $T_0 (s_1 - s_0)$. Consequently, the length of section *1-A*, which represents the difference between the lengths of sections *1-B* and *A-B*, is equal to $(i_1 - i_0) - T_0 (s_1 - s_0)$, i.e. to the exergy.

In this way, on the *i-s* diagram, the exergy of a flow with parameters p and T in relation to surroundings with properties p_0 and T_0 is equal to the distance between the point representing the state of this flow and the line of surroundings.

For various temperatures of the surroundings there will be different lines of surroundings, their slopes will differ and they will have different origins, since, on the *i-s* diagram, the coordinates of the zero point, i_0 and s_0, will be determined by p_0 and T_0.

Along with the method of determining exergy described use is also made of a special *e-s* diagram, whose principle of construction is clear from the above method of determining the exergy by means of the *i-s* diagram. The *e-s* diagram is illustrated in Fig. 9.4. This diagram is but a simple *i-s* diagram plotted in oblique coordinates, on which the enthalpy (i) axis makes a $(90° + \alpha)$ angle with the entropy (s) axis (here the angle $\alpha = \text{arc tan } T_0$). Hence, on the *e-s* diagram the isenthalpies run at an angle of $(90° + \alpha)$ to the abscissa (dotted lines in Fig. 9.4). It is clear that the *e-s* diagram is plotted for only one definite temperature of surroundings, T_0. To make it possible to use the *e-s* diagram to determine the magnitude of exergy at other temperatures of surroundings, the lines of surroundings for other temperatures are drawn on this *e-s* diagram. From this point of view, in determining exergy, the *e-s* diagram is unlikely to offer any essential advantage over the *i-s* diagram.

In analyzing a vapour power cycle the pressure of the surroundings is usually assumed to be $p_0 = 98$ *k*Pa (1 kgf/cm²), and the temperature of the surroundings $T_0 = 0$ to 30 °C. Inasmuch as for various values of T_0 the values of i_0 and s_0 of water will be different, consequently, for various temperatures the lines of surroundings will originate from different points O. In the water region these points are so close to the boundary curve that they can be assumed to lie on the left boundary curve. On the *e-s* diagram plotted for water the lowest value of T_0 (at which the line of surroundings coincides with the abscissa) is assumed equal to 0 °C. The exergy of a flowing working medium is thus determined.

By analogy with the exergy of a working medium in flow, the concept of the exergy of a flux of heat is introduced. The *exergy of a flux of heat* q transferred from a body with a temperature T, is determined in the following way:

$$e_q = q\left(1 - \frac{T_0}{T}\right), \tag{9.60}$$

where T_0 is the temperature of the surroundings. The origin of this relation-

Fig. 9.4

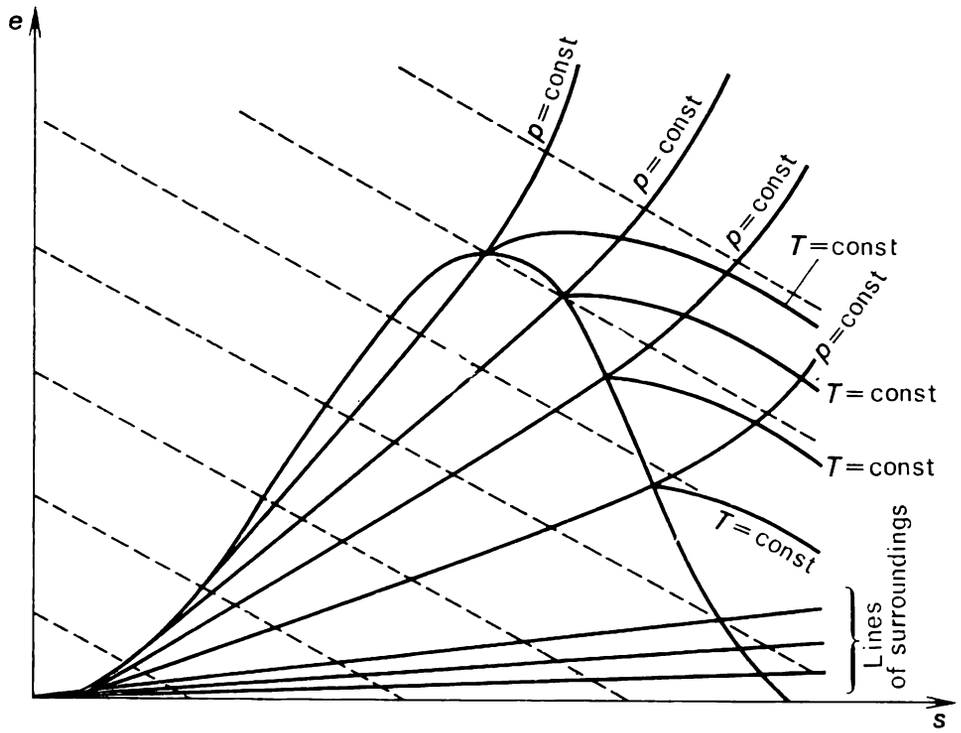

ship clearly coincides with Eq. (9.27): as applied to heat the entropy and exergy evaluation methods of system availability become identical.

If a working medium with parameters p_1 and T_1 flows into an apparatus producing useful work, an amount of heat q_1 is added from a heat source which is at a temperature T, and the working medium leaves the apparatus with parameters p_2, T_2, then, in accordance with the above, the availability lost by the working medium and heat flow is

$$\Delta L = [(e_{\text{in}} + e_{q\,\text{in}}) - e_{\text{out}}] - l_{\text{use}}. \tag{9.61}$$

When no useful work is produced in the apparatus, it is clear that the loss of availability will be

$$\Delta L = (e_{\text{in}} + e_{q\,\text{in}}) - e_{\text{out}}. \tag{9.62}$$

The quantity ΔL includes the losses of availability due both to friction and to heat transfer at a finite temperature difference; the magnitude of ΔL also accounts for the heat lost by the apparatus due to heat transfer to the surroundings.

It should be again emphasized that the essence of the exergy method is the same as the entropy method, consisting in calculating the availability loss.

A quantitative estimation of the degree of thermodynamic perfection of any apparatus can be made with the aid of the concept of *exergy efficiency*, defined as

$$\eta_e = \frac{l_{use}}{e_{in} - e_{out}}. \tag{9.63}$$

If the processes in an apparatus are reversible, then $l_{use} = l_{use}^{max}$ and, taking Eq. (9.58) into account, we have $\eta_e = 1$.

On this basis it is easy to see that for a heat engine (turbine, for instance) the exergy efficiency is equal to the internal relative efficiency of the engine, and for the plant as a whole, to the brake thermal efficiency of the plant.

For a heat apparatus producing no work it is meaningless to determine the exergy efficiency from Eq. (9.63). For such an apparatus the exergy coefficient should be determined as follows:

$$\eta_e = \frac{e_{out}}{e_{in}}. \tag{9.64}$$

This quantity is the measure of the irreversibility of the processes in the apparatus; if these processes were reversible, then

$$e_{in} = e_{out}$$

and

$$\eta_e = 1.$$

In Eqs. (9.63) and (9.64), e_{in} means the sum of the exergies of the working medium and heat flow.

An example of exergy analysis of a concrete thermopower plant will be considered below in Chapter 11.

At the present time the exergy method of analysis finds application in various branches of heat and refrigeration engineering.

10

Gas power cycles

10.1 Cycles of reciprocating internal combustion engines

As can be seen from its name, an internal combustion engine is a heat engine in which heat is added to the working medium by fuel combustion inside the engine. In these engines at the first stage, the working medium is air or a mixture of air and an easily inflammable fuel, and at the second stage, the products of combustion of this liquid or gas fuel (gasoline, kerosene, solar oil, etc.). In gas engines, the working medium does not undergo very high pressures and its temperatures are well above the critical temperature, which permits us to consider the working medium as an ideal gas thereby, significantly simplifying the thermodynamic analysis of the cycle.

Internal combustion engines possess two important advantages, compared with other types of heat engines. First, since the high-temperature heat source, associated with an internal combustion engine, is located as if inside the engine itself, there is no need for large heat-transfer surfaces through which heat is transferred from a high-temperature source to the working medium. This advantage permits compact designs of internal combustion engines, compared with thermopower plants. The second advantage of internal combustion engines consists in the following. For heat engines, in which heat is added to the working medium from an external high-temperature source, the uppermost cycle temperature of the working medium is limited by the temperature admissible for structural materials (for example, an increase in the temperature of steam, used as a working medium in steam-turbine plants, is limited by the properties of the grades of steel used to make the components of the steam boiler and turbine; an increase in tem-

perature is accompanied by a reduction in the ultimate strength of materials). The uppermost value of the continuously changing temperature of the working medium, to which heat is added not through the walls of the internal combustion engine but by the heat released in the volume of the working medium itself, can considerably exceed this limit. It should also be kept in mind that the cylinder walls and the head of the engine are positively cooled, permitting a considerable increase in the temperature range of the cycle, and thereby increasing its thermal efficiency.

Fig. 10.1

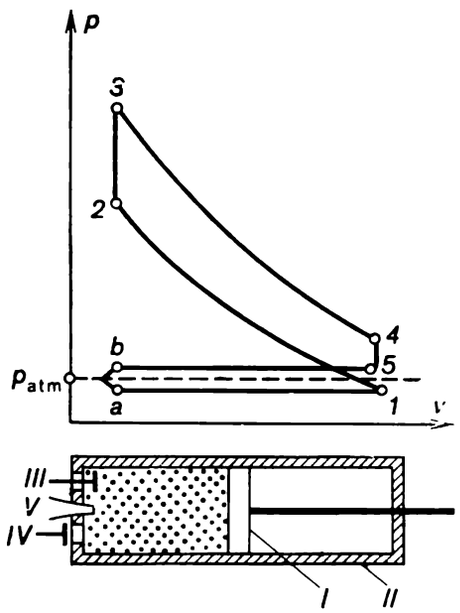

Fig. 10.2

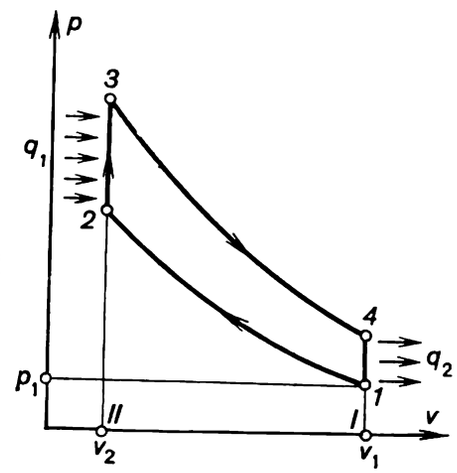

Internal combustion engines (of the reciprocating type) are used to power automobiles, tractors, small airplanes, etc.

The main component of any reciprocating, or piston-type, engine is the cylinder with a piston connected to an external work consumer by means of a crank gear. The cylinder has two openings with valves, through one of which the working medium (air or the fuel-air mixture) is drawn (induced) into the cylinder, and through the other value the working medium is exhausted upon completion of the cycle.

Three main cycles of internal combustion engines are distinguished: the Otto cycle (combustion at V = const), the Diesel cycle (combustion at p = const), and the Trinkler cycle (combustion first at V = const and then at p = const).

Let us consider the *Otto cycle* (named after the German engineer N. Otto, who developed this cycle in 1876).

The schematic diagram of an engine operating on the Otto cycle and the indicator diagram of this engine are shown in Fig. 10.1.

Piston *I* reciprocates in cylinder *II* fitted with an inlet (*III*) and exhaust (*IV*) valves. In the process *a-I* the piston moves from the left to the right, a rarefaction is created inside the cylinder, the inlet valve *III* opens and the combustible mixture, prepared in a special device, the carburetor, is injected into the cylinder. In the Otto cycle the fuel mixture consists of air mixed with a certain amount of vapourized gasoline (or the vapour of another fuel). After the piston reaches its extreme right position and the

process of filling the cylinder with the fuel mixture terminates and the inlet valve closes, the piston begins to move in the opposite direction, from right to left. During this piston stroke the fuel mixture filling the cylinder is compressed and its pressure rises (process *1-2*). After the pressure of the fuel mixture reaches a certain magnitude, corresponding to point *2* on the indicator diagram, the fuel mixture is ignited with the aid of spark plug *V*. Since combustion of the fuel mixture is instantaneous and the piston has no time to move, the process of combustion can be assumed to proceed isochorically. Combustion is accompanied by the release of heat, spent to heat the working medium filling the cylinder. As a result, its pressure rises to a magnitude corresponding to point *3* on the indicator diagram. This pressure forces the piston to move again from left to right and perform work of expansion which is transferred to an external consumer. After the piston reaches the right dead centre (RDC), a special device engages to open exhaust valve *IV* and the cylinder pressure reduces to a value somewhat exceeding atmospheric pressure (process *4-5*), with a fraction of the gas leaving the cylinder. The piston then travels again from right to left, ejecting the remaining part of the waste, or exhaust, gas into the atmosphere*.

Then, a new cycle initiates, with suction of a new portion of the fuel mixture, compression of the mixture, and so on.

Thus, the piston of an internal combustion engine operation on the Otto cycle accomplishes in the course of the cycle four strokes: intake, or admission, compression, expansion upon combustion of the fuel mixture, and exhaust, or ejection, of the combustion products into the atmosphere.

It is convenient to analyze the Otto cycle from the thermodynamic viewpoint, considering an ideal cycle corresponding to the indicator diagram summarized above. Such an ideal Otto cycle is represented on the p-v diagram, shown in Fig. 10.2, plotted for unit mass of the working medium.

A real cycle of an internal combustion engine is an open cycle, since the working medium is drawn into the engine from the outside and is exhausted into the atmosphere upon completion of the cycle. Thus a new portion of the working medium takes part in each cycle. Inasmuch as the amount of fuel contained in the fuel mixture and delivered into the engine cylinder is relatively small compared with the amount of air, to facilitate the analysis the cycle of an internal combustion engine can be assumed to be closed. We will also assume that the working medium of the cycle is air, whose amount in the engine remains constant, and that heat q_1 is added to the working medium from an external high-temperature source isochorically through the cylinder (processes *2-3*) and, correspondingly, that heat q_2 is rejected from the working medium to the low-temperature source following the isochor *4-1*. From the viewpoint of a thermodynamic analysis such a closed cycle is no different from an open Otto cycle.

Inasmuch as in this cycle the processes of compression (*1-2*) and expansion (*3-4*) proceed in rather short time intervals, there can be no appreciable heat exchange with the surroundings, and these processes can be assumed to proceed adiabatically with good approximation.

---

* As can be seen from the indicator diagram, during the admission stroke the cylinder pressure is somewhat lower, and during the exhaust stroke somewhat above, atmospheric pressure, due to the aerodynamic resistance to flow in the two valves and corresponding manifolds.

Thus, an ideal closed cycle, thermodynamically equivalent to the Otto cycle, consists of two adiabats (adiabat of compression *1-2* and adiabat of expansion *3-4*) and two isochors (isochor of heat addition *2-3* and isochor of heat rejection *4-1*). The work performed by the engine per cycle (cycle work output) is depicted by area *2-3-4-1-2*.

Let us determine the thermal efficiency of the Otto cycle.

The amount of heat q_1 added to the working medium in the isochoric process *2-3* is determined from Eq. (7-6):

$$q_1 = c_v (T_3 - T_2), \tag{10.1}$$

where T_2 and T_3 are the working medium temperatures before and after the addition of heat, respectively, and c_v is the mean heat capacity of the working medium within the temperature interval considered (if the working medium is assumed to be an ideal gas with a constant heat capacity, then c_v is the constant heat capacity of such a gas).

The amount of heat rejected from the working medium in the isochoric process *4-1* amounts to

$$q_2 = c_v (T_4 - T_1), \tag{10.2}$$

where T_4 and T_1 are the temperatures of the working medium before and after the rejection of heat.

It follows that, in accordance with the general definition

$$\eta = 1 - \frac{q_2}{q_1},$$

the thermal efficiency of the Otto cycle can be expressed as follows

$$\eta = 1 - \frac{c_v (T_4 - T_1)}{c_v (T_3 - T_2)} \tag{10.3}$$

If heat capacity c_v is assumed to be constant, the expression (10.3) takes the following form:

$$\eta = 1 - \frac{\frac{T_4}{T_1} - 1}{\frac{T_3}{T_2} - 1} \frac{T_1}{T_2}. \tag{10.4}$$

For an ideal gas undergoing an adiabatic process the ratio T_1/T_2 is determined from relationship (7.60a):

$$\frac{T_1}{T_2} = \left(\frac{v_2}{v_1}\right)^{k-1}.$$

Denote by ε the ratio of the specific volumes of the working medium before and after compression:

$$\varepsilon = \frac{v_1}{v_2}. \tag{10.5}$$

The quantity ε is called the *compression ratio*.

Taking Eq. (10.5) into account we can present Eq. (7.60a) in the following form:

$$\frac{T_1}{T_2} = \frac{1}{\varepsilon^{k-1}}. \tag{10.6}$$

For the adiabats *1-2* and *3-4* we can write Poisson's equation:

$$p_1 v_1^k = p_2 v_2^k \tag{10.7}$$

and

$$p_4 v_4^k = p_3 v_3^k. \tag{10.8}$$

Dividing Eq. (10.8) by (10.7) and taking into account that $v_2 = v_3$ and $v_4 = v_1$, we obtain:

$$\frac{p_4}{p_1} = \frac{p_3}{p_2} \tag{10.9}$$

or

$$\frac{T_4}{T_1} = \frac{T_3}{T_2}. \tag{10.10}$$

Fig. 10.3

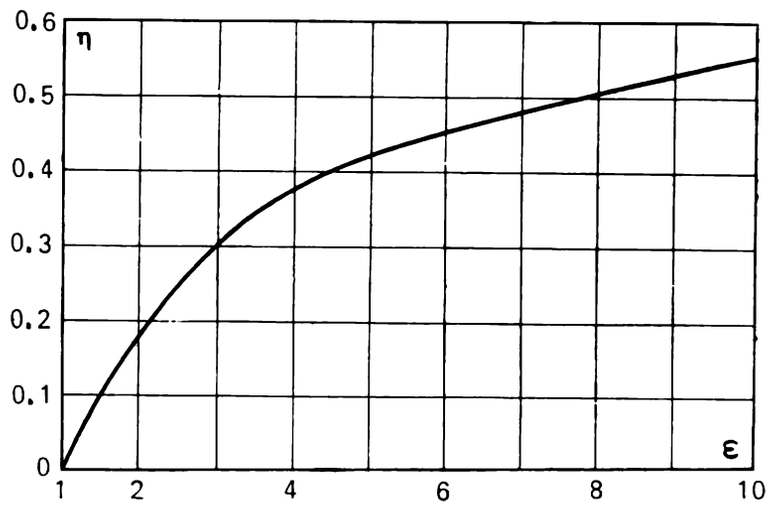

If we take Eqs. (10.6) and (10.10), Eq. (10.4) for the thermal efficiency of the Otto cycle becomes:

$$\eta = 1 - \frac{1}{\varepsilon^{k-1}}. \tag{10.11}$$

The thermal efficiency of the Otto cycle is plotted in Fig. 10.3 as a function of the compression ratio ε for $k = 1.35$.

In accordance with Eq. (10.11), the thermal efficiency of the Otto cycle depends only on the degree of compression of the working medium in the adiabatic process *1-2*; the higher the compression ratio ε, the higher the thermal efficiency of the cycle.

The conclusion that preliminary compression (precompression) of the working medium (gas) results in a higher thermal efficiency of an engine is rather important, and it will be shown below that this conclusion is valid for any internal combustion engine.

Speaking of cycles realized in internal combustion engines, we should mention the engine created by the French inventor J. E. Lenoir in 1859. In this the fuel (illuminating gas) was burned in the combustion chamber at atmospheric pressure. The thermal efficiency of this engine was rather low (3-4%).

The conclusion that precompression of air will permit a considerable increase of the thermal efficiency of an engine was a great step forward in the development of the theory of internal combustion engines. It is interesting to note that the idea of the expediency of compressing the air before delivering it into the combustion chamber of an internal combustion engine was first advanced by S. Carnot as early as 1824. The design of an engine based on constant volume air compression and combustion was first suggested by A. Beau de Rochas in 1862; later Otto constructed an engine in which this cycle was realized.

Thus, from the viewpoint of higher thermal efficiency, it is expedient to raise the compression ratio in every way possible. In practice, however, it proves impossible to operate engines with very high compression ratios ε,

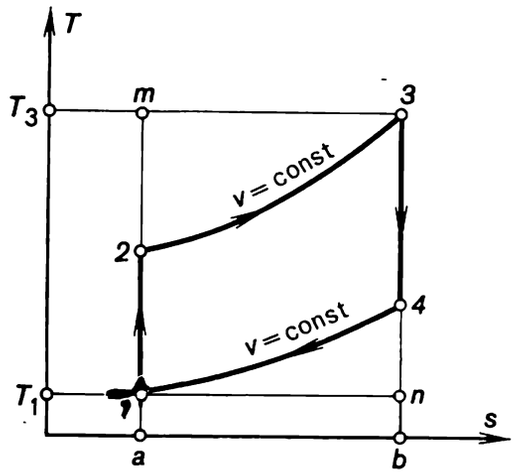

Fig. 10.4

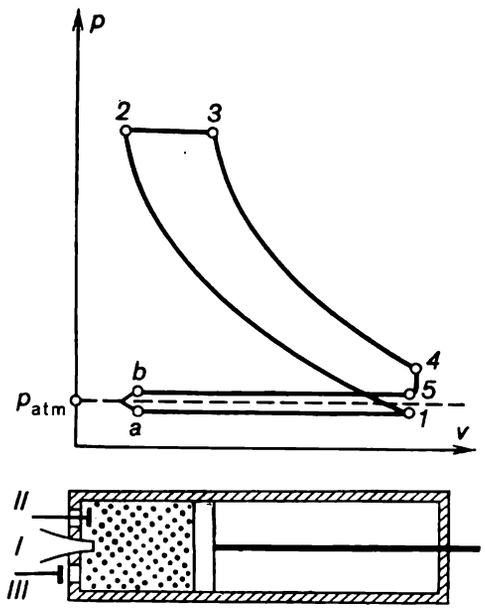

Fig. 10.5

accompanied by an increase in temperature and pressure, due to the fact that upon reaching a certain compression ratio spontaneous ignition of the fuel mixture often takes place before the piston comes into its extreme left position in the cylinder. As a rule this process involves the appearance of knocking, or detonation, and destroys the components of an engine. Thus, for conventional carburetor engines the compression ratio does not exceed twelve. The compression ratio depends on the quality of the fuel fired, increasing with improved antiknock properties of the fuel characterized by the octane number.

The heat q_1 added to the working medium in the Otto cycle (see the T-s diagram shown in Fig. 10.4) is represented on the T-s diagram by the area

a-2-3-b-a, and the heat q_2 rejected from the working medium, by the area *1-2-3-4-1**.

Carburetor engines operated on the Otto cycle are widely used in practice to power light vehicles, motor trucks, and airplanes with reciprocating engines.

The compression ratio ε can be raised if not the fuel mixture but only pure air is compressed. The fuel is then injected into the engine cylinder after compression is terminated. The *Diesel cycle* (named after the German engineer R. Diesel) is based on exactly this principle. An internal combustion engine operated on this cycle was constructed by Diesel in 1897. The schema-

Fig. 10.6

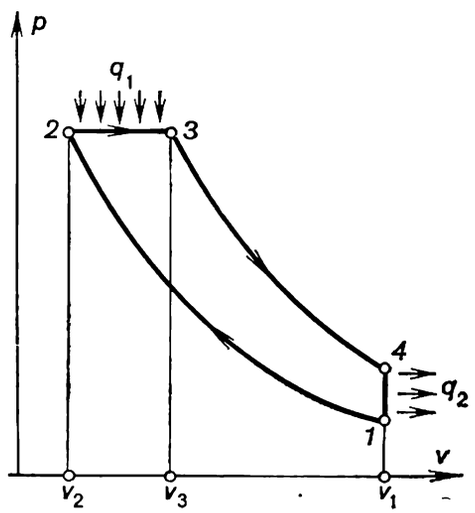

tic diagram of the engine operated on the Diesel cycle and the indicator diagram of this engine are represented in Fig. 10.5. In the process *a-1* atmospheric air is drawn into the cylinder, and in the process *1-2* this air undergoes adiabatic compression to pressure p_2 (Diesel engines are usually operated with a compression ratio ε ranging from 15 to 16). Then the compressed air begins to expand and simultaneously fuel (kerosene or solar oil) is injected into the cylinder through a special fuel injection valve. Because of the high temperature of the compressed air the fuel ignites and burns at a constant pressure, which is ensured by the expansion of the gas from v_2 to v_3 at $p =$ $=$ const. The Diesel cycle is, therefore, referred to as the constant-pressure combustion cycle.

After the process of fuel injection terminates (point *3*), further expansion of the working medium follows the adiabat *3-4*. In the state corresponding to point *4* the exhaust valve opens, the cylinder pressure reduces to atmospheric (following the isochor *4-5*) and then the gas is exhausted from the cylinder into the atmosphere (line *5-b*). Thus, the Diesel cycle is a four-stroke cycle.

To facilitate analysis, let us replace this Diesel cycle with a thermodynamically equivalent ideal closed cycle, realized with pure air. The *p-v* diagram of this cycle is shown in Fig. 10.6. As can be seen from this diagram, the

* For an ideal gas any two isochors, just as any two isobars, are equidistant on the *T-s* diagram. Indeed, since on the *T-s* diagram the slope of the isochor is $(\partial T/\partial s)_v =$ $= T/c_v$, $c_v \neq f(v)$, at a given temperature the slopes of all isochors of an ideal gas are the same (the conclusion is also valid for the isobars).

ideal Diesel cycle comprises two adiabats (the adiabat of compression *1-2* and the adiabat of expansion *3-4*), the isobar *2-3* along which the heat q_1 is transferred from the high-temperature source, and the isochor *4-1* along which the heat q_2 is rejected to the low-temperature source, or sink.

We shall calculate the thermal efficiency of this cycle (assuming, as before, that the air used as the working medium in this cycle is an ideal gas with a constant heat capacity).

Let us introduce one more notation, the *degree of preliminary expansion* ρ:

$$\rho = \frac{v_3}{v_2}. \tag{10.12}$$

From the general expression for the thermal efficiency of any cycle,

$$\eta = 1 - \frac{q_2}{q_1},$$

taking into account the fact that in the isochoric process *4-1* [see Eq. (10.2)]

$$q_2 = c_v (T_4 - T_1)$$

and in the isobaric process *2-3*

$$q_1 = c_p (T_3 - T_2), \tag{10.13}$$

we obtain:

$$\eta = 1 - \frac{c_v (T_4 - T_1)}{c_p (T_3 - T_2)} \tag{10.14}$$

or, taking Eq. (7.55) into account,

$$\eta = 1 - \frac{1}{k} \frac{\frac{T_4}{T_1} - 1}{\frac{T_3}{T_2} - 1} \frac{T_1}{T_2}. \tag{10.15}$$

When an ideal gas undergoes an isobaric process,

$$\frac{T_3}{T_2} = \frac{v_3}{v_2} = \rho. \tag{10.16}$$

For the processes *1-2* and *3-4* the equations of an adiabat give:

$$p_1 v_1^k = p_2 v_2^k,$$
$$p_4 v_4^k = p_3 v_3^k.$$

Allowing for $v_4 = v_1$ and $p_2 = p_3$ and dividing Eq. (10.8) by Eq. (10.7), we obtain:

$$\frac{p_4}{p_1} = \left(\frac{v_3}{v_2}\right)^k. \tag{10.17}$$

Replacing in Eq. (10.17) p_1 and p_4 on the isochor $v_4 = v_1$ following Clapeyron's equation and taking into account Eq. (10.12), we obtain:

$$\frac{T_4}{T_1} = \rho^k, \tag{10.18}$$

Substituting Eqs. (10.16) and (10.18) in Eq. (10.15), we get the following expressions for the thermal efficiency of the Diesel cycle:

$$\eta = 1 - \frac{1}{k} \frac{\rho^k - 1}{\rho - 1} \frac{1}{\varepsilon^{k-1}}. \tag{10.19}$$

This relationship shows that the thermal efficiency of the Diesel cycle is the higher the greater the compression ratio ε (just as in the Otto cycle) and the smaller the quantity ρ.

Fig. 10.7

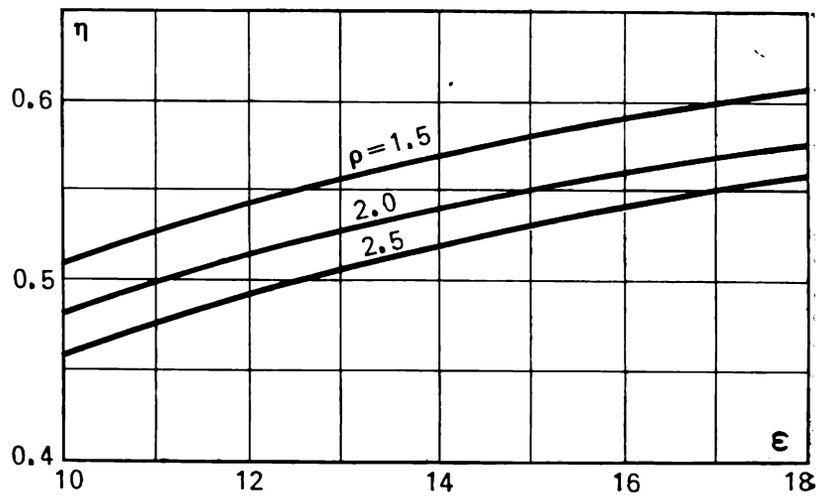

Fig. 10.8

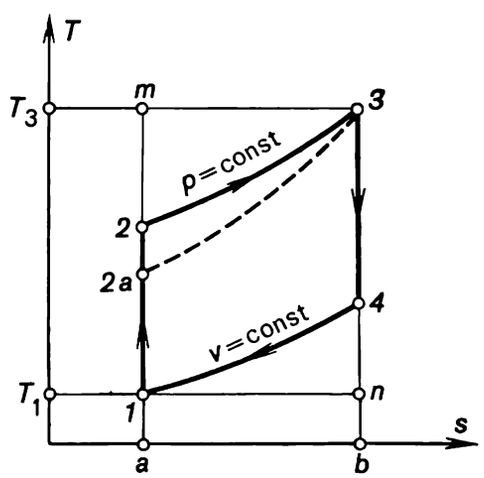

The thermal efficiency of the Diesel cycle is plotted in Fig. 10.7 as a function of the compression ratio ε for various values of the quantity ρ and at $k = 1.35$.

The Diesel cycle is represented on the *T-s* diagram in Fig. 10.8. The quantity q_1 is represented on the diagram by the area *a-2-3-b-a*, the quantity q_2 by the area *a-1-4-b-a* and the work of the cycle l_c is represented by the area *1-2-3-4-1*.

Let us compare the thermal efficiencies of the Otto and Diesel cycles. These cycles can be compared assuming for the two cycles either an equal compression ratio ε or the same highest temperature of the working medium undergoing the cycles (T_3). It is also understood that the initial properties of the working medium at the initial point of a cycle (p_1, v_1, T_1) are the same for the two cycles.

If the compression ratio is assumed to be the same for the two cycles, then it is clear from Eqs. (10.11) and (10.21) that the thermal efficiency of the

Otto cycle exceeds the thermal efficiency of the Diesel cycle. It is, however, hardly proper to compare the thermal efficiencies of these cycles at the same compression ratio ε, since, as was already mentioned above, the advantage of the Diesel cycle consists in its ability to realize the cycle with higher compression ratios.

A comparison of the thermal efficiencies of the Otto and Diesel cycles realized at the same highest cycle temperature (T_3) shows that the thermal efficiency of the Diesel cycle is higher. In particular, this can be seen from the T-s diagram shown in Fig. 10.8; since $c_p > c_v$ i.e. $T\left(\frac{\partial s}{\partial T}\right)_p > T\left(\frac{\partial s}{\partial T}\right)_v$, it follows that on the T-s diagram an isochor runs steeper than an isobar (in Fig. 10.8 the isochor of the Otto cycle is drawn with a dotted line), indicating that the area ratio of the Diesel cycle exceeds that of the Otto cycle. Comparing the two cycles on the condition that the work $l_c = q_1 - q_2$ is the same for the two cycles realized at the same maximum pressure, we can easily see that more heat q_2 is involved in the Otto cycle than in the Diesel cycle and the thermal efficiency is lower. Such a comparison is more justified and gives reasons to consider the Diesel cycle to be more efficient than the Otto cycle.

It should also be noted that a Diesel engine, requiring no carburation of the fuel fired, can be operated with a lower grade fuel.

The major shortcomings of Diesel engines, compared with the Otto engine, consist in the necessity of spending work to drive the device ensuring atomization of fuel and in the relatively low speed, due to the lower rate of fuel combustion.

A kind of a hybrid of the Otto and Diesel cycles is the *mixed* (or dual) *combustion Trinkler* cycle*, sometimes also referred to as the *Sabatier cycle*. Engines operating on this cycle (Fig. 10.9) have a so-called *forechamber* open to the working cylinder through a narrow channel. The p-v diagram for this cycle is shown in Fig. 10.10. In the working cylinder air is compressed adiabatically due to the inertia of the flywheel set on the engine shaft; the air heats in the course of compression to a temperature ensuring ignition of the liquid fuel delivered into the forechamber (process *1-2*). The shape and location of the forechamber contribute to a better mixing of the fuel and air, resulting in rapid combustion of a fraction of the fuel in the small volume of the forechamber (process *2-5*).

Due to the rise in pressure in the forechamber, the mixture of the unburned fuel, air, and products of combustion formed in it is forced into the working cylinder where combustion of the unburned fuel takes place, accompanied by displacement of the piston from left to right at an approximately constant pressure (process *5-3*). Upon completion of fuel combustion the products of combustion expand further adiabatically (process *3-4*); the exhaust gases are then expelled from the cylinder (process *4-1*).

Thus, in a dual combustion engine heat q_1 is first added along the isochor (q_1'), then following the isobar (q_1'').

Unlike the Diesel engine a dual-combustion engine requires no high-pressure compressor to ensure atomization of the liquid fuel. The liquid fuel introduced into the forechamber at a comparatively low pressure is

* Named after the Russian engineer G. V. Trinkler who first suggested this cycle in 1904.

sprayed (atomized) by the jet of compressed air coming from the engine cylinder. In addition, the dual combustion cycle preserves to some extent the advantages of the Diesel cycle over the Otto cycle, since a part of the process of fuel combustion proceeds at a constant pressure.

Let us determine the thermal efficiency of the dual combustion cycle.

The amount of heat q_2 [the heat rejected along the isochor (*4-1*)] present in the general relation for the thermal efficiency,

$$\eta = 1 - \frac{q_2}{q_1},$$

is found, as before, from the relationship (10.2):

$$q_2 = c_v (T_4 - T_1),$$

Fig. 10.9

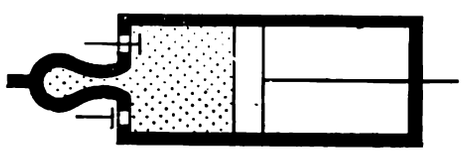

Fig. 10.10

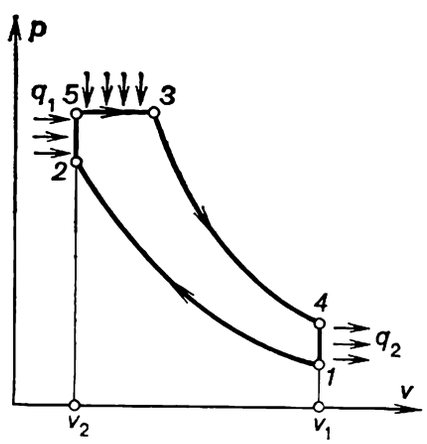

whereas the quantity q_1 is the sum of the heat added in the isochoric process *2-5* (q_1') and the heat added in the isobaric process *5-3* (q_1''), i.e.

$$q_1 = q_1' + q_1''. \tag{10.20}$$

It is clear that

$$q_1' = c_v (T_5 - T_2) \tag{10.21}$$

and

$$q_1'' = c_p (T_3 - T_5). \tag{10.22}$$

It follows that the thermal efficiency of the mixed, or dual, combustion cycle is

$$\eta = 1 - \frac{c_v (T_4 - T_1)}{c_v (T_5 - T_2) + c_p (T_3 - T_5)} \tag{10.23}$$

or

$$\eta = 1 - \frac{\frac{T_4}{T_1} - 1}{\left(\frac{T_5}{T_2} - 1\right) + k \frac{T_5}{T_2}\left(\frac{T_3}{T_5} - 1\right)} \frac{T_1}{T_2}. \tag{10.24}$$

For the isochor *4-1* Clapeyron's equation gives:

$$\frac{T_4}{T_1}=\frac{p_4}{p_1}. \tag{10.25}$$

The equations for the adiabats *1-2* and *3-4* can take the form $p_1v_1^k=p_2v_2^k$, $p_4v_4^k=p_3v_3^k$.

Dividing Eq. (10.8) by Eq. (10.7) and taking into account that $v_1=v_4$, we obtain:

$$\frac{p_4}{p_1}=\frac{p_3}{p_2}\left(\frac{v_3}{v_2}\right)^k. \tag{10.26}$$

Since $p_3=p_5$ (isobar *5-3*), and $v_2=v_5$ (isochor *2-5*), the above relationship can be transformed to

$$\frac{p_4}{p_1}=\lambda\rho^k, \tag{10.27}$$

where $\lambda=p_5/p_2$ is the pressure ratio in the isochoric process of combustion, and $\rho=v_3/v_5$ is the degree of preliminary expansion in the isobaric process of combustion.

Accounting for Eq. (10.27), we obtain from Eq. (10.26):

$$\frac{T_4}{T_1}=\lambda\rho^k. \tag{10.28}$$

For the isochor *2-5*

$$\frac{T_5}{T_2}=\frac{p_5}{p_2}=\lambda, \tag{10.29}$$

and for the isobar *5-3*

$$\frac{v_3}{v_5}=\frac{T_3}{T_5}=\rho. \tag{10.30}$$

Finally, in accordance with Eq. (10.6),

$$\frac{T_1}{T_2}=\frac{1}{\varepsilon^{k-1}}.$$

Taking into account equations (10.28) to (10.30) and (10.6), we obtain from relationship (10.24):

$$\eta=1-\frac{\lambda\rho^k-1}{(\lambda-1)+k\lambda(\rho-1)}\frac{1}{\varepsilon^{k-1}}. \tag{10.31}$$

For $\rho=1$ (which corresponds to a cycle with no isobaric process) Eq. (10.31) turns into Eq. (10.11) for the thermal efficiency of the Otto cycle, and for $\lambda=1$ (a cycle with no isochoric process) Eq. (10.31) turns into Eq. (10.19) for the thermal efficiency of the Diesel cycle.

Comparing the thermal efficiency of the dual combustion cycle with the thermal efficiencies of the Otto and Diesel cycles, we see that at the same compression ratio ε

$$\eta^{\mathrm{D}}<\eta^{\mathrm{d.c.}}<\eta^{\mathrm{O}}, \tag{10.32}$$

and at equal maximum cycle temperatures (T_3)

$$\eta^{\mathrm{D}}>\eta^{\mathrm{d.c.}}>\eta^{\mathrm{O}}. \tag{10.33}$$

The above inequalities are illustrated graphically on the *T-s* diagram shown in Fig. 10.11. In particular, relationship (10.33) follows from the fact

that in all three cycles the amount of heat q_2, equal to the area *a-1-4-b-a*, is the maximum work output in the Diesel cycle (area *1-2b-3-4-1*), the mean work output in the dual combustion cycle (area *1-2-5-3-4-1*) and the minimum work output in the Otto cycle (area *1-2a-3-4-1*).

It will also be noted that in four-stroke engines during the admission and exhaust strokes (ejection of the combustion products) proceeding at approximately atmospheric pressure the engine performs uncharacteristic work. Therefore, in up-to-date high-speed reciprocating engines, for instance, motorcycle engines, the entire working cycle is realized in two strokes. The admission and exhaust (ejection) strokes are eliminated, since the working medium enters the cylinder and is exhausted from it through special ope-

Fig. 10.11

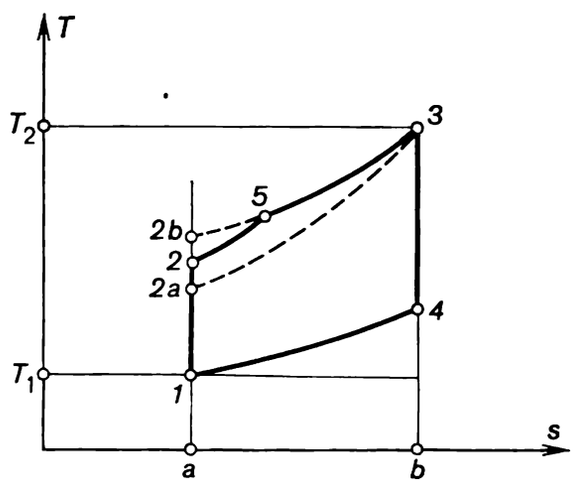

nings replacing the intake and exhaust valves and not closed by the moving piston. Two-stroke engines realize the same cycles as four-stroke engines.

The results of this analysis of the effectiveness of the cycles realized in internal combustion engines hold true only for ideal cycles with no allowance for irreversibility and for a number of other factors. In real cycles the properties of the working medium (air, during the first two strokes of the Diesel cycle and of the dual combustion cycle, or fuel mixture in the Otto cycle; air and products of combustion during the next strokes) differ from those of an ideal gas with a constant heat capacity; due to the inevitable friction, the processes of adiabatic compression and expansion proceed not along an isentrop, but with rising entropy; the forced cooling of cylinder walls increases even more the deviation of these processes from isentropic ones. Combustion takes place in short but nevertheless finite intervals of time during which the piston has time to displace through a certain distance, so that the condition of the isochority of the process is not so strictly observed; there are mechanical losses in the mechanism, too.

The same reasoning pertains to the exhaust process when the exhaust valve opens.

Therefore, when passing from the ideal thermodynamic cycles, investigated above, to real cycles, we must introduce the concept of the relative efficiency of an engine, the magnitude of which is determined by testing the engine.

10.2 Gas-turbine cycles

One of the main drawbacks inherent in reciprocating internal combustion engines is the need for a crank gear and flywheel and the inevitable irregularity of crankshaft rotation. These shortcomings make it impossible to concentrate a high capacity in one unit, restricting the application of reciprocating engines.

Another type of internal combustion engine, the gas turbine, is free from this drawback. Possessing a high thermal efficiency and at the same time possessing all the advantages of a rotary engine, i.e. the possibility of concentrating large capacities in small units, the gas turbine has great potential. Currently, the application of gas turbines in highly efficient power plants is limited chiefly because the insufficient heat resistance of up-to-date structural materials permit the dependable operation of gas turbines only at temperatures considerably inferior to those characteristic of reciprocating internal combustion engines, resulting in a lower thermal efficiency of the plant. Further progress in making new strong and heat-resistant materials will make it possible to operate gas turbines at higher temperatures.

Presently, gas turbines are used in aviation, marine power plants, railroad transport and are being gradually introduced into power-generating. Gas turbines are divided into two main types:

(i) constant-pressure (combustion) gas turbines (p = const),

(ii) constant-volume (combustion) gas turbines (v = const).

Thus, gas turbines are classified by the method of fuel combustion in the same way as reciprocating internal combustion engines.

The schematic diagram of a *constant-pressure gas-turbine plant* is given in Fig. 10.12. Mounted on a common shaft are gas turbine *1*, compressor *2*, fuel pump *3* and power consumer *4* (represented by the symbol of a three-phase a.c. generator). The compressor draws atmospheric air, compresses it to the pressure required and directs the compressed air into combustion chamber *5* into which the fuel pump delivers fuel from tank *9*. Liquid and gaseous fuels are suitable. In gas-fired gas turbines the pump is replaced with a gas compressor.

Fuel combustion proceeds in the combustion chamber at p = const. The products of combustion, expanding in the nozzles *6* of the gas turbine, hit the turbine blades *7*, and produce work on the blades; the waste gas is then exhausted into the atmosphere through exhaust duct *8*. The pressure of the exhaust gas somewhat exceeds atmospheric pressure.

The ideal cycle of the gas-turbine plant under consideration is plotted on the p-v diagram in Fig. 10.13.

The construction principle of this ideal cycle does not differ from that of the cycles of reciprocating engines: the cycle is assumed to be closed, i.e. the amount of the working medium is constant throughout the cycle. The discharge of the waste gas into the atmosphere is replaced by an isobaric process with heat rejection to a low-temperature source; it is assumed that heat q_1 is added to the working medium from an external source, through the walls of the turbine casing. It is also assumed that the working medium is a gas of constant composition such as pure air. On the indicator diagram shown in Fig. 10.13 process *1-2* represents the compression of air in the compressor (as was shown in Sec. 7.9, the process of compression can be adiaba-

tic, isothermal, or polytropic). Heat is added to the working medium along the isobar *2-3* (this process corresponds to the combustion of fuel in the combustion chamber). The working medium (air and combustion products in the

Fig. 10.12

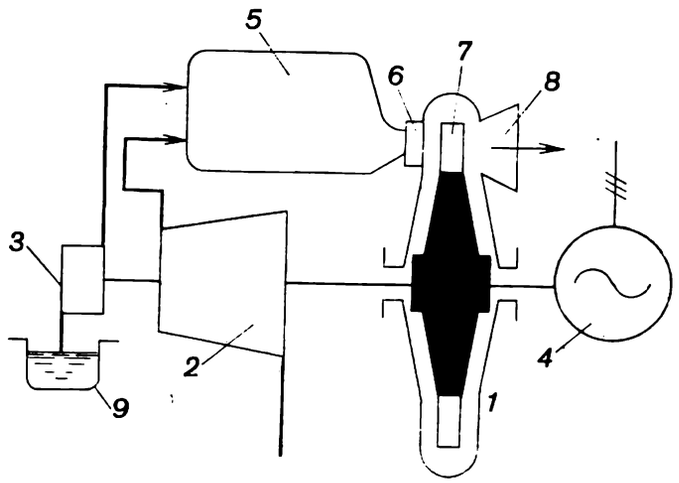

Fig. 10.13

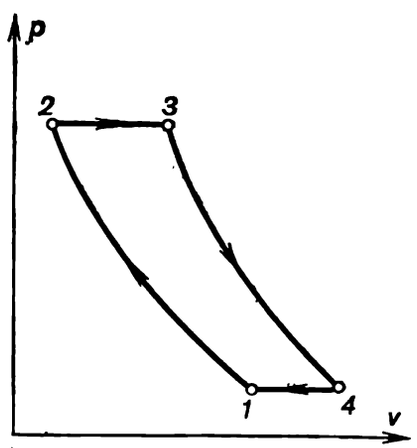

real cycle) then expands adiabatically in the turbine nozzles and transfers work to the turbine wheel (process *3-4*). The isobaric process *4-1* corresponds to the exhaust of the waste gas from the turbine*.

Let us determine the thermal efficiency of the cycle of a constant-pressure combustion gas turbine, sometimes referred to as the Brayton cycle. Just as before, the working medium is assumed to be an ideal gas with a constant heat capacity.

---

* One may ask why, in considering piston-type internal combustion engines, do we assume the process of exhaust to be isochoric, and assume the same process to be isobaric when a gas turbine is involved? In fact, the reciprocating engine is a periodic-action machine (i.e. the properties of the working medium at a fixed point vary with time), and the turbine is a continuous-action machine (in steady-state operation the properties of the working medium do not change with time). It follows that at the turbine exit the exhaust pressure is always constant (p_4 = const) and close to atmospheric, whereas in a reciprocating engine, when the exhaust valve opens, the cylinder pressure drops to atmospheric pressure almost instantaneously, in a time interval during which the piston displacement is very small (v = const).

The thermal efficiency of this gas turbine will differ, depending on whether the process of compression accomplished is isothermal, adiabatic, or polytropic.

Let us consider first the *cycle of a constant-pressure combustion gas-turbine plant with isothermal compression** of air in the compressor. The *T-s* diagram of this cycle is depicted in Fig. 10.14.

In this case heat will also be rejected from the working medium to the low-temperature source in the isobaric process *4-1* (area *b-1-4-c-b* in Fig. 10.14) and in the process of isothermal compression *1-2* (area *a-2-1-b-a*), with the quantity of heat rejected during the isobaric process *4-1* being

$$q_2' = c_p (T_4 - T_1), \tag{10.34}$$

Fig. 10.14

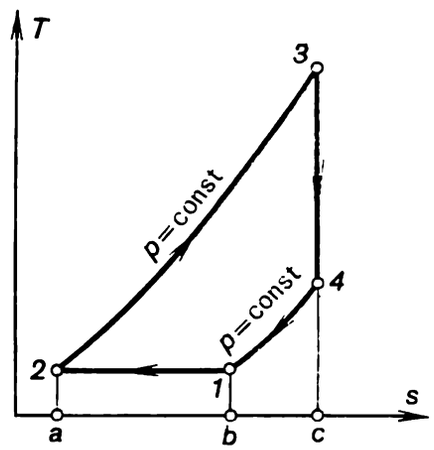

and the quantity of heat rejected during the isothermal process *1-2* being [in accordance with Eq. (7.22a)]

$$q_2'' = RT_1 \ln \frac{p_2}{p_1}. \tag{10.35}$$

Thus, the total amount of heat rejected is

$$q_2 = c_p (T_4 - T_1) + RT_1 \ln \frac{p_2}{p_1}. \tag{10.36}$$

The quantity of heat added to the working medium in the isobaric process *2-3* is

$$q_1 = c_p (T_3 - T_2). \tag{10.37}$$

Substituting these values of q_1 and q_2 into the general relation for the thermal efficiency,

$$\eta = 1 - \frac{q_2}{q_1},$$

we obtain:

$$\eta = 1 - \frac{c_p (T_4 - T_1) + RT_1 \ln \frac{p_2}{p_1}}{c_p (T_3 - T_2)}. \tag{10.38}$$

* It was shown in Sec. 7.9 that the only way of ensuring a compressed air temperature equal to the compressor inlet temperature is by multistage compression with intermediate cooling of the compressed gas in special heat exchangers.

Dividing the numerator and the denominator of the right-hand side of Eq. (10.38) by c_pT_1 and having in mind that for an ideal gas

$$\frac{R}{c_p}=\frac{c_p-c_v}{c_p}=\frac{k-1}{k},$$

we obtain:

$$\eta=1-\frac{\left(\frac{T_4}{T_2}-1\right)+\frac{k-1}{k}\ln\frac{p_2}{p_1}}{\frac{T_3}{T_2}-1}. \tag{10.39}$$

The notation of the degree of preliminary expansion, $\rho = v_3/v_2$, introduced in the preceding section, will also be used below.

Let us denote the ratio of the pressure at the end of expansion to the pressure at the beginning of the process by

$$\beta=\frac{p_2}{p_1}. \tag{10.40}$$

This quantity is called the *pressure ratio of the process of compression.* It is clear that in the isobaric process *2-3*

$$\frac{T_3}{T_2}=\frac{v_3}{v_2}=\rho, \tag{10.41}$$

and that in the adiabatic process *3-4*

$$\frac{T_4}{T_3}=\left(\frac{p_4}{p_3}\right)^{\frac{k-1}{k}}, \tag{10.42}$$

or, which is the same (since $p_3 = p_2$ and $p_4 = p_1$),

$$\frac{T_4}{T_3}=\left(\frac{p_1}{p_2}\right)^{\frac{k-1}{k}}=\frac{1}{\beta^{\frac{k-1}{k}}}. \tag{10.43}$$

Substituting Eqs. (10.41) and (10.43) into Eq. (10.39) and taking into account that

$$\frac{T_4}{T_2}=\frac{T_4}{T_3}\frac{T_3}{T_2},$$

we obtain the expression for the thermal efficiency of a gas turbine operated with constant-pressure combustion (isothermal compression of air):

$$\eta=1-\frac{\beta^{\frac{k-1}{k}}\left[\frac{k-1}{k}\ln\beta-1\right]+\rho}{\beta^{\frac{k-1}{k}}(\rho-1)}. \tag{10.44}$$

The dependence of the thermal efficiency η on ρ for various values of β (at $k = 1.35$), described by Eq. (10.44), is presented graphically in Fig. 10.15.

Equation (10.44) can be used to find the maximum value of the thermal efficiency for different degrees of preliminary expansion ρ. For this purpose take the first derivative of the thermal efficiency with respect to the pressure

ratio β at ρ = const. After doing the required transformations we obtain

$$\left(\frac{\partial\eta}{\partial\beta}\right)_\rho = \frac{\rho}{\rho-1}\left(\frac{k-1}{k}\right)\beta^{\frac{1-2k}{k}} - \frac{1}{\rho-1}\left(\frac{k-1}{k}\right)\frac{1}{\beta}. \tag{10.45}$$

Equating this expression with zero, we obtain the following condition for the maximum thermal efficiency:

$$\beta = \rho^{\frac{k}{k-1}}. \tag{10.46}$$

Fig. 10.15

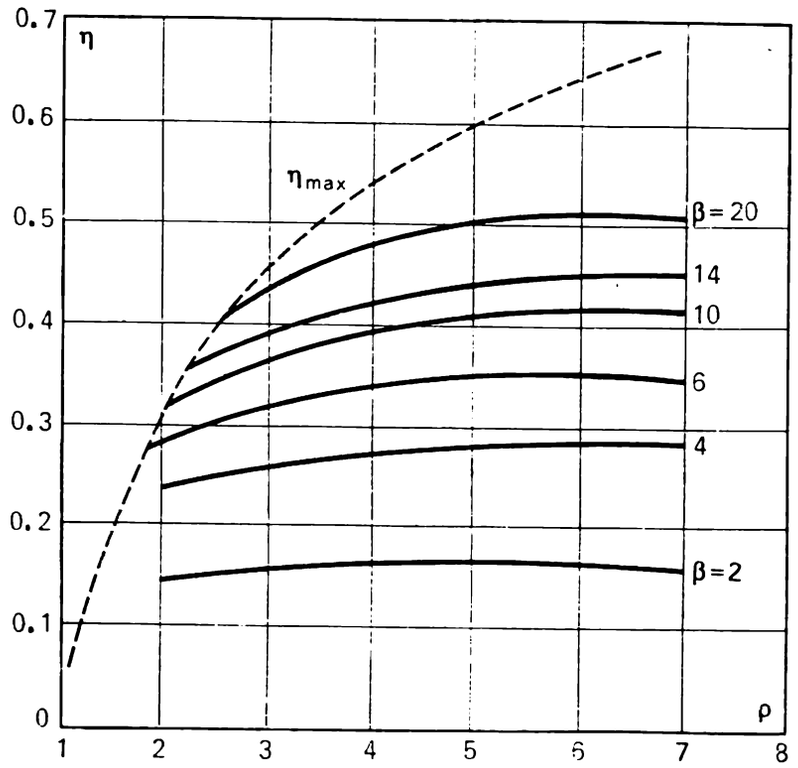

It will be noted that at $\beta = \rho^{\frac{k}{k-1}}$ the cycle is represented graphically by a triangular diagram.

Replacing in Eq. (10.44) β with its value from Eq. (10.46), we obtain the maximum thermal efficiency at a given ρ:

$$\eta_{max} = 1 - \frac{\ln\rho}{\rho-1}. \tag{10.47}$$

On the graph shown in Fig. 10.15 the line of maximum efficiencies is represented by the dotted line.*

Consider now the *cycle of a constant-pressure combustion gas turbine* (p = = const) *for the adiabatic compression* of air in the compressor of the gas-turbine plant. The T-s diagram of this cycle is shown in Fig. 10.16.

In this case

$$\left.\begin{aligned} q_1 &= c_p(T_3 - T_2), \\ q_2 &= c_p(T_4 - T_1). \end{aligned}\right\} \tag{10.48}$$

* Considering the dependence $\eta_{max} = f(\rho)$ plotted in Fig. 10.15, we should bear in mind that at $\rho > 3$ the pressure ratios β obtained are so high that they cannot be realized in practice. Consequently, for these values of ρ this dependence is of limited interest.

It follows from (10.48) that the thermal efficiency of this cycle is determined from the expression

$$\eta = 1 - \frac{c_p (T_4 - T_1)}{c_p (T_3 - T_2)}, \tag{10.49}$$

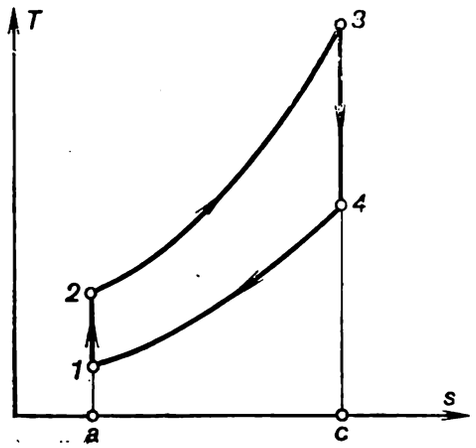

Fig. 10.16

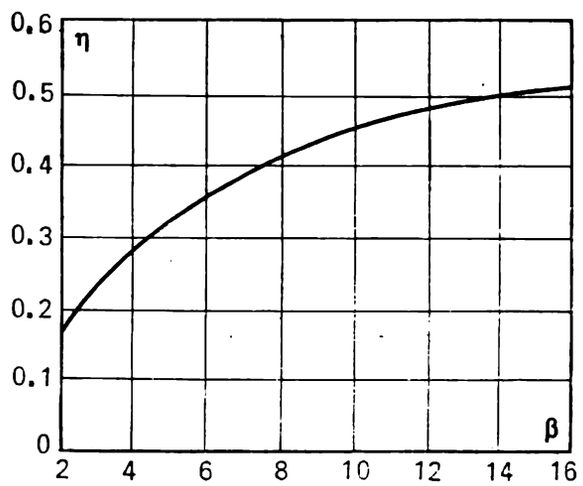

Fig. 10.17

or

$$\eta = 1 - \frac{\frac{T_4}{T_1} - 1}{\frac{T_3}{T_2} - 1} \frac{T_1}{T_2}. \tag{10.50}$$

The temperature ratios present in Eq. (10.50) are easily expressed in terms of ρ and β. Indeed, for the adiabatic process *1-2*

$$\frac{T_1}{T_2} = \left(\frac{p_1}{p_2}\right)^{\frac{k-1}{k}}. \tag{10.51}$$

On the other hand, from the fact that $p_3 = p_2$ and $p_4 = p_1$ it follows that

$$\frac{T_4}{T_3} = \left(\frac{p_1}{p_2}\right)^{\frac{k-1}{k}}.$$

Thus, for this cycle,

$$\frac{T_2}{T_1} = \frac{T_3}{T_4} \tag{10.52}$$

and

$$\eta = 1 - \frac{T_1}{T_2},$$

or

$$\eta = 1 - \frac{1}{\beta^{\frac{k-1}{k}}}. \tag{10.53}$$

The thermal efficiency of this cycle is plotted in Fig. 10.17 as a function of β at $k = 1.35$.

A comparison of the effectiveness of cycles realized in constant-pressure combustion gas turbines for isothermal and adiabatic compression, conducted with equal amounts of added heat q_1, maximum pressures p_3 and maximum cycle temperatures T_3 (inasmuch as in the two cases the initial cycle pressure p_1 is equal to atmospheric, the condition of equality of pressures p_3 corresponds to the condition of equality of the pressure ratios β), shows the thermal efficiency of the cycle with adiabatic compression to exceed that of the cycle with isothermal compression:

$$\eta^{ad} > \eta^{isotherm}. \tag{10.54}$$

This conclusion can be easily deduced by plotting the cycles being analyzed on a common *T-s* diagram shown in Fig. 10.18. In accordance with the conditions of comparison previously assumed, the pressure in the process of heat addition (*2-3*) and the pressure during the exhaust process (*4-1'-1*) are the same in both cycles, as well as the values of q_1 and T_3. It is clear from the *T-s* diagram that the work output of the cycle with adiabatic compression (area *1-2-3-4-1*) is greater than the work output of the cycle with isothermal compression (area *2-3-4-1'-2*). With the same value of q_1 it leads to the inequality (10.54).

It is clear that when a constant-pressure combustion gas turbine is operated with polytropic air compression and an exponent $1 < n < k$, its thermal efficiency will fall between η^{ad} and $\eta^{isotherm}$.

The thermal efficiency of a constant-pressure combustion gas turbine (p = const) can be increased by practising heat regeneration.

The concept of heat regeneration was introduced in Sec. 3.6 when considering reversible cycles. It was shown that regeneration raises the thermal efficiency of a cycle since the area ratio increases. The schematic diagram of a *gas-turbine plant incorporating a constant-pressure combustion gas turbine with heat regeneration* is shown in Fig. 10.19.

A gas-turbine plant with heat regeneration differs from one without heat regeneration in that the compressor *1* does not discharge compressed air directly into the combustion chamber *2* but first passes it through the heat exchanger *3* where it is heated by the exhaust gases. Correspondingly, before being rejected into the atmosphere, the exhaust gases pass through the heat exchanger where they are cooled heating the compressed air. Thus, a certain fraction of the heat, previously lost with the exhaust gases, is now utilized in the turbine operated on the regeneration cycle.

The regenerative cycle of a constant-pressure combustion gas-turbine plant is shown in Fig. 10.20.

This cycle involves either isothermal or adiabatic air compression in the compressor *1-2*, process *2-3* ensuring isobaric heating of the air in the regenerator (heat exchanger), isobaric process *3-4* corresponding to heat

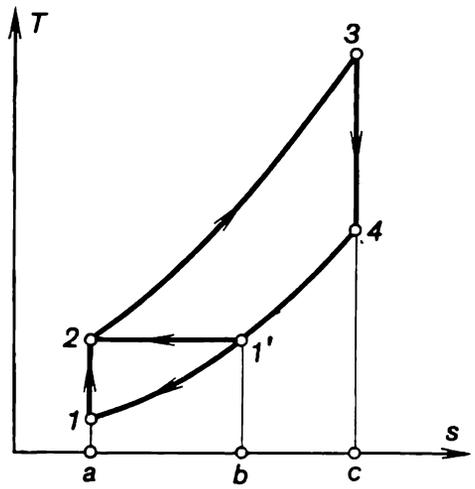

Fig. 10.18

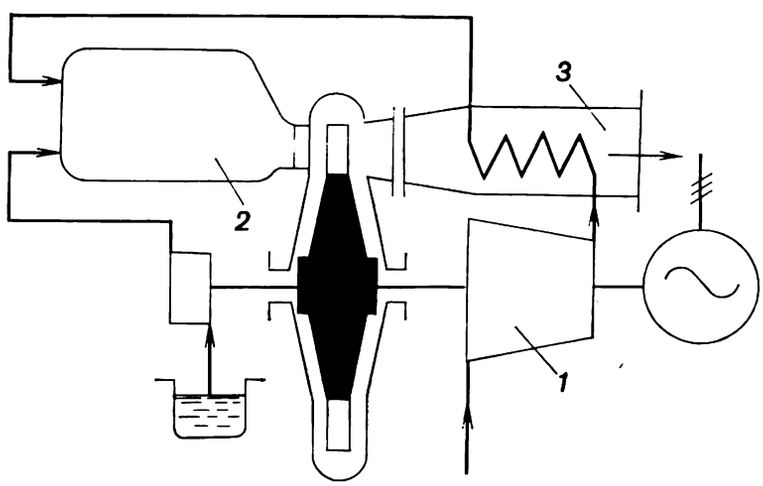

Fig. 10.19

addition in the combustion chamber upon fuel combustion, process *4-5* of adiabatic expansion of gases in the turbine, isobaric cooling of the exhaust gas in the heat exchanger in process *5-6*, and finally, the hypothetical isobaric process *6-1*, closing the cycle.

The completeness of heat generation is usually determined by the *degree of regeneration*, or the *regeneration fraction*

$$\sigma = \frac{T_3 - T_2}{T_5 - T_2},$$

i.e. by the ratio of the heat which was actually utilized in the process of regeneration (process *2-3*) to the heat available, corresponding to the possible temperature difference, $T_5 - T_2$.

The quantity of heat transferred to the compressed air in the regenerator should naturally be equal to the amount of heat lost by the exhaust gases in the regenerator, i.e.

$$c_p (T_3 - T_2) = c_p (T_5 - T_6). \qquad (10.55)$$

Thus, taking into account the previously assumed condition that the heat capacity of air does not change with temperature, we get:

$$T_3 - T_2 = T_5 - T_6. \tag{10.56}$$

Let us denote by $\gamma = T_3/T_2$ the ratio of the air temperature at the heat-exchanger outlet, T_3, to the air temperature at the heat-exchanger inlet, T_2. In the limiting case of complete regeneration it is clear that the temperature $T_3 = T_5$ and, consequently, the degree of regeneration $\sigma = 1$. For this case there is a limiting value γ_{max}:

$$\gamma_{max} = \frac{T_3}{T_2} = \frac{T_5}{T_2}. \tag{10.57}$$

Fig. 10.20

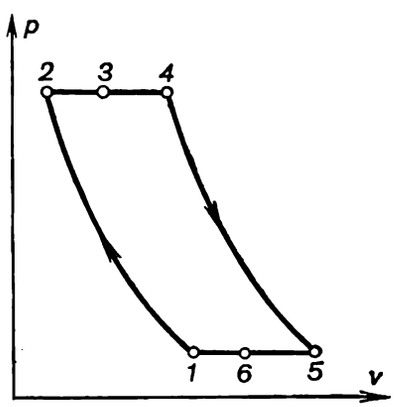

Fig. 10.21

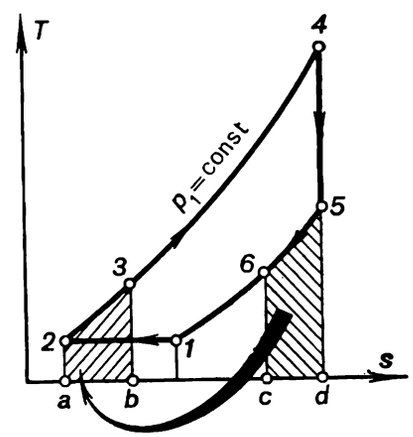

Let us now consider the *regenerative cycle of a constant-pressure gas turbine with isothermal air compression.* Figure 10.21 shows this cycle on a *T-s* diagram. In the presence of regeneration, the heat rejected along section *5-6* of isobar p_2 = const is added to the working medium along section *2-3* of isobar p_1 = const (consequently, on the *T-s* diagram shown in Fig. 10.21 area *c-6-5-d-c* is equal to area *a-2-3-b-a*); in Fig. 10.21 this process is indicated by an arrow.

The heat added in this cycle is

$$q_1 = c_p (T_4 - T_3); \tag{10.58}$$

the heat rejected is

$$q_2 = RT_1 \ln \frac{p_2}{p_1} + c_p (T_6 - T_1). \tag{10.59}$$

The amount of heat rejected with the exhaust gases can be determined taking into account Eq. (10.55):

$$c_p (T_6 - T_1) = c_p (T_5 - T_1) - c_p (T_5 - T_6) = c_p (T_5 - T_1) - c_p (T_3 - T_2). \tag{10.60}$$

Then,

$$q_2 = RT_1 \ln \frac{p_2}{p_1} + c_p (T_5 - T_1) - c_p (T_3 - T_2). \tag{10.61}$$

The thermal efficiency can now be determined as

$$\eta = 1 - \frac{RT_1 \ln \frac{p_2}{p_1} + c_p (T_5 - T_1) - c_p (T_3 - T_2)}{c_p (T_4 - T_3)}. \tag{10.62}$$

Dividing the numerator and denominator of Eq. (10.62) by c_pT_1 and allowing for $T_1 = T_2$, we obtain:

$$\eta = 1 - \frac{\frac{k-1}{k}\ln\frac{p_2}{p_1} + \left(\frac{T_5}{T_1} - 1\right) - \left(\frac{T_3}{T_2} - 1\right)}{\frac{T_4}{T_3} - \frac{T_3}{T_2}}. \tag{10.63}$$

Denoting the ratios $\frac{p_2}{p_1} = \beta$ and $\frac{T_3}{T_2} = \gamma$, we now determine the values of the temperature ratios in Eq. (10.63), taking into account that

$$\rho = \frac{v_4}{v_3} = \frac{T_4}{T_3}. \tag{10.64}$$

Then,

$$\frac{T_5}{T_2} = \frac{T_5}{T_4}\frac{T_4}{T_3}\frac{T_3}{T_2} = \left(\frac{p_5}{p_4}\right)^{\frac{k-1}{k}}\rho\gamma = \left(\frac{p_1}{p_2}\right)^{\frac{k-1}{k}}\rho\gamma = \frac{\rho\gamma}{\beta^{\frac{k-1}{k}}}, \tag{10.65}$$

$$\frac{T_4}{T_2} = \frac{T_4}{T_3}\frac{T_3}{T_2} = \rho\gamma. \tag{10.66}$$

Replacing in Eq. (10.63) for the thermal efficiency the pressure and temperature ratios with their notations β, ρ and γ, we get:

$$\eta = 1 - \frac{\frac{k-1}{k}\ln\beta + \left(\frac{\rho\gamma}{\beta^{\frac{k-1}{k}}} - \gamma\right)}{\rho\gamma - \gamma} = 1 - \frac{\frac{k-1}{k}\ln\beta}{\gamma(\rho-1)} + \frac{\beta^{\frac{k-1}{k}} - \rho}{\beta^{\frac{k-1}{k}}(\rho-1)}. \tag{10.67}$$

It follows that the greater γ is (γ characterizes the degree of regeneration), the higher is the thermal efficiency of a constant-pressure combustion gas-turbine plant.

With a maximum degree of regeneration, $\sigma = 1$ and, consequently, $\gamma_{max} = T_5/T_2 = T_5/T_1$. All the heat available in the exhaust gases is then utilized to heat the compressed air. Such regeneration is referred to as complete. It is clear that this case is only of theoretical importance, since at a zero temperature difference between the exhaust gases and air, which would have taken place in the event of complete regeneration, no heat transfer is possible in the regenerator, the heat exchanger. Figure 10.22 shows the cycle with complete regeneration on a *T-s* diagram. It is clear that area *a-2-3-b-a* equals area *c-1-5-d-c*. In this case at $T_3 = T_5$ the degree of preliminary expansion will be:

$$\rho = \frac{T_4}{T_3} = \frac{T_4}{T_5} = \left(\frac{p_4}{p_5}\right)^{\frac{k-1}{k}} = \beta^{\frac{k-1}{k}}. \tag{10.68}$$

Substituting (10.68) into Eq. (10.67), we obtain:

$$\eta_{max} = 1 - \frac{\frac{k-1}{k}\ln\beta}{\gamma_{max}\left(\beta^{\frac{k-1}{k}} - 1\right)}. \tag{10.69}$$

It follows that the thermal efficiency of a constant-pressure combustion gas-turbine plant operating with complete regeneration does not explicitly-

depend on ρ. Since the limited degree of regeneration of the given cycle is expressed in terms of $\gamma_{max} = T_5/T_1$, the thermal efficiency of this cycle can

Fig. 10.22

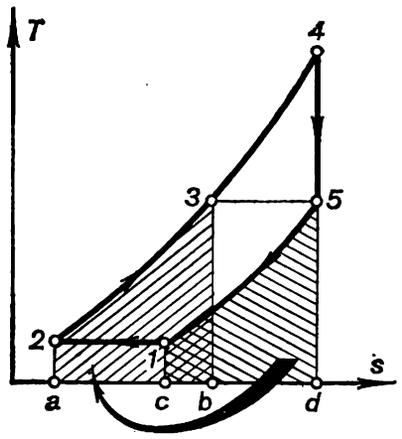

Fig. 10.23

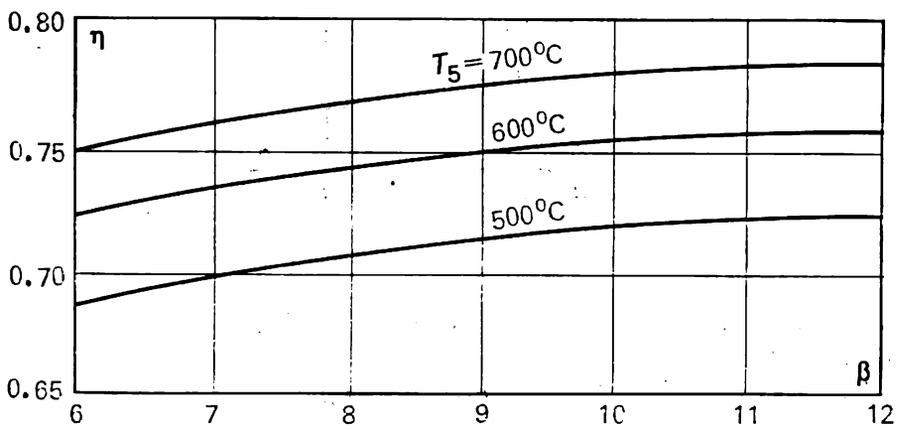

be directly determined by the temperature at the end of expansion, T_5, i.e.

$$\eta_{max} = 1 - \frac{\frac{k-1}{k} T_1 \ln \beta}{T_5 \left(\beta^{\frac{k-1}{k}} - 1\right)}. \tag{10.70}$$

The higher the temperature T_5, the higher the thermal efficiency of the cycle. Equation (10.70) shows the necessity of raising the temperature T_5 at the end of expansion which unfortunately is hampered due to the comparatively low mechanical strength of the materials of gas-turbine blades at high temperatures.

The thermal efficiency of the cycle of the given gas-turbine plant operating with complete regeneration is plotted as a function of the pressure ratio β at different values of T_5 in Fig. 10.23.

It can be easily shown that regeneration increases the thermal efficiency of a cycle, as is clear, for instance, from the *T-s* diagram shown in Fig. 10.22. In fact, the work output per cycle of a gas-turbine plant, l_c, will be the same both with and without regeneration (this work is represented by area *1-2-3-4-5-6-1*), whereas the heat q_1 added in the cycle will be represented by area

a-2-3-4-5-d-a for the cycle without regeneration, and by area *b-3-4-5-d-b*, for the cycle with regeneration.

Taking into account the fact that area *b-3-4-5-d-b* is smaller than area *a-2-3-4-5-d-a*, it follows from the equation for thermal efficiency presented in the form

$$\eta = \frac{l_c}{q_1},$$

that the thermal efficiency of the regenerative cycle is higher than that of the cycle without heat regeneration.

Now let us determine the thermal efficiency of a *constant-pressure combustion gas-turbine plant operated on a regenerative cycle with adiabatic air*

Fig. 10.24

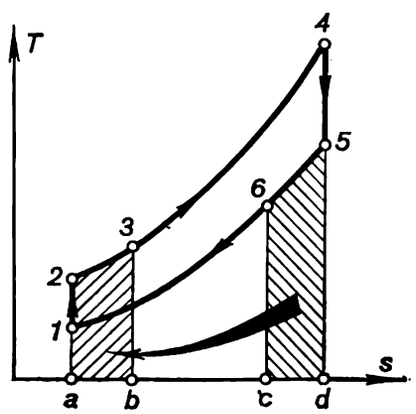

compression. Fig. 10.24 shows the cycle on a *T-s* diagram. The heat transferred from the exhaust gases in the regenerator is represented by area *c-6-5-d-c* and the heat added to the compressed air passing through the heat exchanger, by area *a-2-3-b-a*.

The added heat is

$$q_1 = c_p (T_4 - T_3); \tag{10.71}$$

the rejected heat is

$$q_2 = c_p (T_6 - T_1) = c_p (T_5 - T_1) - c_p (T_5 - T_6); \tag{10.72}$$

but since

$$c_p (T_5 - T_6) = c_p (T_3 - T_2),$$

we have:

$$q_2 = c_p (T_5 - T_1) - c_p (T_3 - T_2). \tag{10.73}$$

The thermal efficiency of the cycle will then have the following form:

$$\eta = 1 - \frac{c_p (T_5 - T_1) - c_p (T_3 - T_2)}{c_p (T_4 - T_3)}. \tag{10.74}$$

Dividing the numerator and denominator of Eq. (10.74) by $c_p T_1$, we obtain:

$$\eta = 1 - \frac{\left(\frac{T_5}{T_1} - 1\right) - \left(\frac{T_3}{T_1} - \frac{T_2}{T_1}\right)}{\frac{T_4}{T_1} - \frac{T_3}{T_1}}. \tag{10.75}$$

Let us express the temperature ratios in Eq. (10.75) in terms of ρ, β and γ. The equations of the adiabats give the following for the processes *1-2* and *4-5*:

$$\frac{T_2}{T_1}=\left(\frac{p_2}{p_1}\right)^{\frac{k-1}{k}}=\beta^{\frac{k-1}{k}}$$

and

$$\frac{T_4}{T_5}=\left(\frac{p_4}{p_5}\right)^{\frac{k-1}{k}}=\beta^{\frac{k-1}{k}};$$

i.e.

$$\frac{T_2}{T_1}=\frac{T_4}{T_5},$$

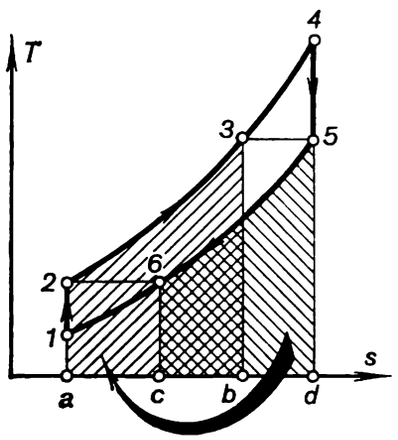

Fig. 10.25

or

$$\frac{T_5}{T_1}=\frac{T_4}{T_2}.$$

Thus,

$$\frac{T_5}{T_1}=\frac{T_4}{T_2}=\frac{T_4}{T_3}\frac{T_3}{T_2}=\rho\gamma,$$

$$\frac{T_3}{T_1}=\frac{T_3}{T_2}\frac{T_2}{T_1}=\gamma\beta^{\frac{k-1}{k}},$$

$$\frac{T_4}{T_1}=\frac{T_4}{T_3}\frac{T_3}{T_2}\frac{T_2}{T_1}=\rho\gamma\beta^{\frac{k-1}{k}}.$$

Therefore

$$\eta=1-\frac{(\rho\gamma-1)\left(\gamma\beta^{\frac{k-1}{k}}-\beta^{\frac{k-1}{k}}\right)}{\left(\rho\gamma\beta^{\frac{k-1}{k}}-\gamma\beta^{\frac{k-1}{k}}\right)}=1-\frac{(\rho\gamma-1)-\beta^{\frac{k-1}{k}}(\gamma-1)}{\gamma\beta^{\frac{k-1}{k}}(\rho-1)}. \quad (10.76)$$

The maximum possible degree of regeneration, or regeneration fraction occurs at $T_3 = T_5$, i.e. at $\gamma_{max} = T_5/T_2$. A cycle with a maximum degree of regeneration is shown on a *T-s* diagram in Fig. 10.25. Just as on the *T-s* diagram in Fig. 10.24, the heat rejected from the exhaust gas in the regenerator is represented by area *c-6-5-d-c*, and the heat added to the compressed air passing through the regenerator by area *a-2-3-b-a*.

In this case we have

$$\frac{T_5}{T_1}=\frac{T_3}{T_1}$$

and

$$\frac{T_4}{T_1}=\frac{T_4}{T_5}\frac{T_5}{T_1}=\beta^{\frac{k-1}{k}}\gamma_{max}\beta^{\frac{k-1}{k}}.$$

Then

$$\eta_{max}=1-\frac{\beta^{\frac{k-1}{k}}-1}{\gamma_{max}\beta^{\frac{k-1}{k}}\left(\beta^{\frac{k-1}{k}}-1\right)}=1-\frac{1}{\gamma_{max}\beta^{\frac{k-1}{k}}}. \qquad (10.77)$$

Fig. 10.26

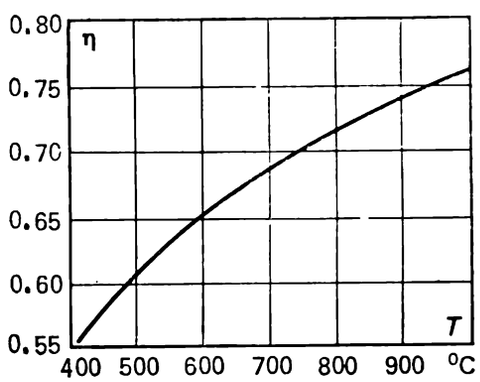

Fig. 10.27

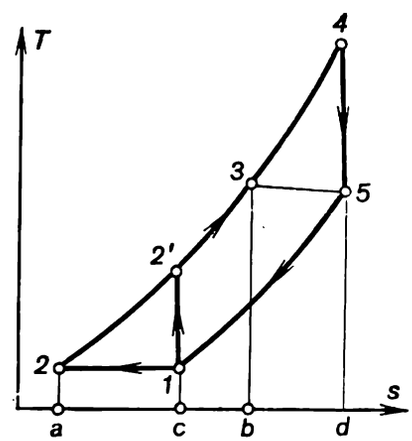

Formula (10.77) can be transformed to show the dependence of the maximum thermal efficiency on gas temperature at the end of expansion, or T_5.

As is known, with a maximum degree of regeneration

$$\gamma_{max}=\frac{T_3}{T_2}=\frac{T_3}{T_1}\frac{T_1}{T_2}=\frac{T_5}{T_1}\frac{1}{\beta^{\frac{k-1}{k}}};$$

thus

$$\eta_{max}=1-\frac{T_1}{T_5}. \qquad (10.78)$$

Thus, the thermal efficiency of a constant-pressure gas-turbine plant operating with maximum regeneration* and adiabatic compression depends only on the temperature of the gas at the end of adiabatic expansion, T_5, an important characteristic determining the design of a turbine (the initial gas temperature T_1 is usually assumed constant). The maximum thermal efficiency is plotted in Fig. 10.26 as a function of final temperature T_5, with $T_1 = 300$ °C.

---

* The term "maximum, or limiting, regeneration", as distinct from the term "complete regeneration" considered for the cycle with isothermal expansion, was introduced to emphasize that during a cycle with adiabatic compression not all the heat contained in the exhaust gases is transferred to the air in the regenerator even at $T_3 = T_5$ (since $T_1 < T_2$). A fraction of that heat, represented in Fig. 10.25 by area *a-1-6-c-a*, is the heat q_2 transferred to the low-temperature source; but in the cycle with isothermal compression, q_2 is the heat transferred in the process of air compression.

Let us now compare two gas-turbine cycles, with isothermal compression and complete regeneration and with adiabatic compression and maximum regeneration, both cycles being realized at different initial pressures and temperatures and at the same maximum pressures and temperatures (with the temperatures at the end of expansion being the same for the two cycles, as shown in Fig. 10.27).

The thermal efficiency of the cycle with isothermal compression and complete heat regeneration

$$\eta_{max} = \frac{l_c}{q_1} = \frac{area\ 1\text{-}2\text{-}4\text{-}5\text{-}1}{area\ b\text{-}3\text{-}4\text{-}d\text{-}b},$$

and the thermal efficiency of the cycle with adiabatic compression and maximum heat regeneration

$$\eta'_{max} = \frac{l_c}{q_1} = \frac{area\ 1\text{-}2'\text{-}4\text{-}5\text{-}1}{area\ b\text{-}3\text{-}4\text{-}d\text{-}b}.$$

Since in this case equal amounts of heat q_1 (area *b-3-4-d-b*) are added to the working medium from an outside source, and the work outputs of the two cycles are different, with the cycle, involving isothermal compression producing more work (area *1-2-4-5-1* is greater than area *1-2'-4-5-1*), the thermal efficiency of the cycle with isothermal compression and complete regeneration is always greater than the thermal efficiency of the cycle with adiabatic compression and maximum regeneration.

Thus, with a maximum possible heat regeneration, isothermal compression is more expedient than adiabatic.

Along with the constant-pressure combustion gas turbine, *constant-volume combustion gas turbines* can also be constructed. The schematic diagram of such a gas-turbine plant is given in Fig. 10.28, and Fig. 10.29 shows the cycle of such a plant on a *p-v* diagram. Compressor *2*, sharing a common shaft with turbine *1* proper, compresses atmospheric air to the pressure required (process *1-2*). Air can be compressed both isothermally and adiabatically. A fuel pump or compressor *3* delivers liquid or gaseous fuel and the compressed air into combustion chamber *4*. Sometimes the fuel and air are not delivered into the combustion chamber in separate streams, but as a combustible mixture (fuel-air mixture preliminarily prepared in a carburetor). With the valves closed the fuel is usually ignited in the combustion chamber from spark plug *8*. Fuel combustion (process *2-3*) proceeds at a constant volume. After fuel combustion is terminated the exhaust valve opens and the products of combustion pass into nozzle *5* of the turbine where they expand adiabatically (process *3-4*) to atmospheric pressure. The gases leaving the nozzles flow onto blades *6* of the turbine, perform work and are discharged into the atmosphere through the turbine exhaust duct *7*. The useful work produced by the plant is transferred to energy (power) consumer *9*. The cycle is closed by a hypothetical isobaric process *4-1*.

Notwithstanding their somewhat higher thermal efficiency, constant-volume combustion gas-turbine plants are less widespread than constant-pressure combustion gas turbines. This is usually explained by the lower absolute brake thermal efficiency of the constant-volume combustion gas turbine compared with the absolute efficiency of the constant-pressure combustion gas-turbine plant, in spite of its higher thermal efficiency. The latter is mainly due to the uneconomical performance of the turbine traced to the fact that the properties of the gas flowing into the turbine vary with time.

In addition, the design of constant-volume combustion gas turbines is far more complicated than that of gas turbines in which combustion proceeds at a constant pressure, p = const.

Both the reciprocating internal-combustion engines and the gas-turbine plants, whose cycles were investigated above, operate on an open cycle and

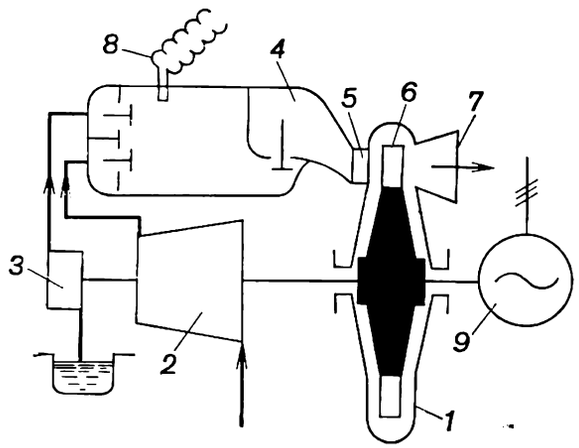

Fig. 10.28

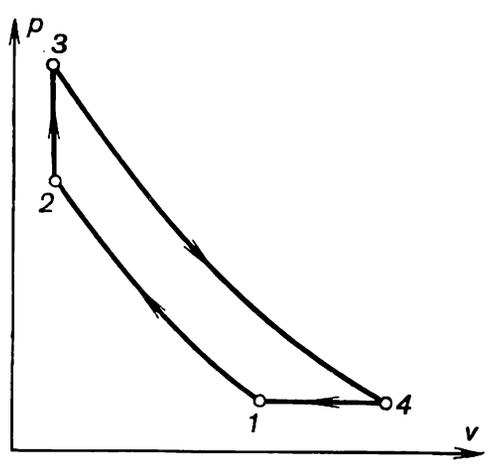

Fig. 10.29

are referred to as open-cycle machines. In the cycles of the internal combustion turbines considered, the compressor draws air from the atmosphere, and the exhaust gases are discharged into the atmosphere from the turbine outlet (or from the regenerator outlet in gas-turbine plants operating on the regenerative cycle). In this way, in these plants each new cycle is realized with a fresh portion of the working medium. As was already mentioned, these cycles were hypothetically plotted and investigated on p-v and T-s diagrams as closed cycles.

It is possible, however, to realize an actually closed cycle, possessing in a number of cases certain advantages over the open cycle. The schematic diagram of a *constant-pressure gas turbine plant operated on a closed cycle* is illustrated in Fig. 10.30. Compressor *1* compresses the working medium to the pressure required and forces the compressed working medium to flow into regenerator (heat-exchanger) *2* where it is heated at p = const by the hot exhaust gases leaving the turbine. The heated working medium then flows from the regenerator into heat exchanger *3* where heat is added from

an external source. The heat exchanger is basically similar to a steam boiler in which gas is heated, instead of water and steam. Heat is added in the heater by the fuel delivered by fuel pump *4* (if liquid fuel is fired) and burned in the combustion chamber. The air required for fuel combustion is delivered by fan *5*, and is preheated in heater *3* by the heat contained in the exhaust gases. The working medium, heated in heater *3* at p = const, passes into turbine *6* where it expands and produces work. The exhaust gases are directed from the turbine into the regenerator in which a fraction of their heat is transferred to the compressed gas coming from the compressor.

From the regenerator the waste gases are directed into cooler *7* where they are cooled to the lowest cycle temperature at p = const. Water is usually

Fig. 10.30

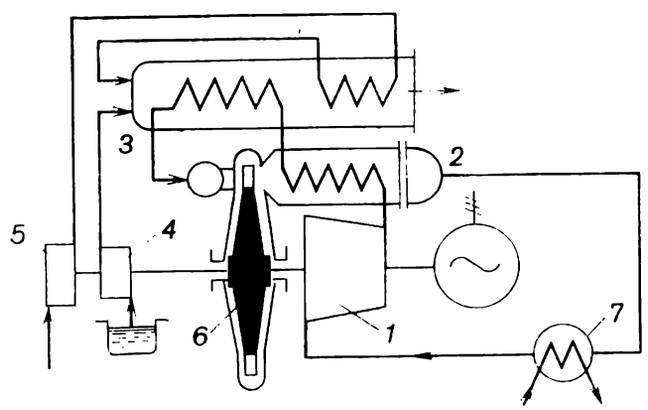

used as a coolant. From the cooler the working medium is sent again into the compressor. Thus, the same portion of the working medium is continuously engaged in producing work.

From the point of view of thermodynamics the operating cycle of this gas-turbine plant is similar to the regenerative constant-pressure combustion cycle previously analyzed. Therefore all the formulas for the thermal efficiency of a regenerative constant-pressure combustion cycle derived above are applicable to the closed cycle. We shall examine the advantages and drawbacks of the closed cycle, compared with an open cycle. Since a constant amount of the working medium is involved in the operation of the closed-cycle gas turbine, not only air and combustion products but any gas can be used as a working medium. Let us consider the advantage of replacing air with another working medium.

The formulas for the thermal efficiency of a cycle derived above with heat addition at p = const and heat regeneration present the thermal efficiency of the cycle as a function of not only β, ρ and γ but, under otherwise identical conditions, of the type of the working medium. Indeed, apart from β, ρ and γ, all expressions for the thermal efficiency contain the adiabatic exponent k which depends chiefly on the atomicity of the gas involved*.

This indicates the effect of the properties of the working medium used in the closed cycle on its thermal efficiency.

---

* The values of the adiabatic (isentropic) exponent k for ideal gases were given in Sec. 7.4.

An analysis of the Eqs. (10.67) and (10.76) for the thermal efficiency of this cycle shows that with the same β, ρ and γ an increase in the adiabatic exponent leads to a higher cycle efficiency. On the other hand, it is clear that when a gas with a greater adiabatic exponent is used at the same value of the thermal efficiency and the same ρ and γ, the cycle can be realized with a smaller pressure ratio.

For this reason, since it permits the use of a working medium with a maximum adiabatic exponent, the closed cycle has definite advantages. Such working fluids can be primarily monatomic gases, helium and argon (it will be recalled that for an ideal monatomic gas $k = 1.67$, whereas for air we assume an exponent $k = 1.35$).

Fig. 10.31

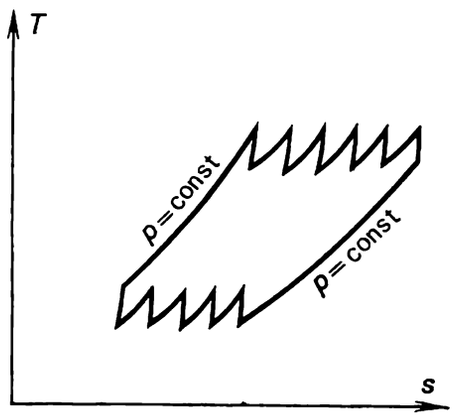

On the other hand, the closed cycle permits operation with cycle pressures most advantageous technically and economically. If the lowest pressure in an open-cycle gas turbine is atmospheric pressure, then in the closed cycle realized with the same pressure ratio the initial cycle pressure can be considerably higher than atmospheric pressure. This permits operation at higher pressures, which leads to a considerble reduction in the volumes of the gases flowing through the components of a gas turbine, smaller heat exchange surfaces are required and the task of creating high-power gas-turbine plants is greatly facilitated.

To raise the thermal efficiency of a gas-turbine plant it is expedient to introduce multistage combustion and multistage cooling of the compressed working medium. The T-s diagram of such a cycle with a great number of stages is shown in Fig. 10.31. Such gas-turbine plants are operated as open-cycle installations with a rather high efficiency.

In conclusion we shall again emphasize that our analysis of the effectiveness of the cycles of gas-turbine plants was based on the assumption that these cycles are reversible and that the working medium is an ideal gas whose heat capacity is independent of temperature. In considering actual gas-turbine plants and reciprocating internal-combustion engines, cycles should be analyzed taking into account the losses due to irreversibility, in particular by introducing the concept of the relative internal efficiencies of a plant.

10.3 Reaction-engine cycles

A reaction engine is a device in which the chemical energy of fuel is converted into the kinetic energy of the jet propulsion of a working medium (gas) expanding in the nozzles. This jet creates thrust because of the reactive, or back action, of the working medium, flowing from the engine backwards relative to aircraft motion.

If we denote by G_{gas} the mass of gas flowing from the exit nozzle of a reaction engine in some time interval $\Delta\tau$, and use w_{gas} to denote the velocity of this gas relative to the flying vehicle (jet-propelled aircraft or rocket) and F to denote the thrust of the reaction engine, then in accordance with Newton's second law,

$$F\Delta\tau = G_{gas}\Delta w_{gas}, \tag{10.79}$$

we obtain for the moving vehicle (taking into account that the velocity with which the gas flows from the nozzle changes from a relatively low velocity in the combustion chamber to w_{gas} at the nozzle exit, i.e. $\Delta w_{gas} \cong w_{gas}$):

$$F = \frac{G_{gas}}{\Delta\tau} w_{gas} \tag{10.80}$$

or, introducing the notation $g_{gas} = G_{gas}/\Delta\tau$ (the rate of gas flow),

$$F = g_{gas} w_{gas}. \tag{10.81}$$

Reaction engines are divided into two main categories, rocket engines and jet engines.

Rockets carry both fuel and an oxidizer required to ensure fuel combustion (liquid oxygen, ozone, hydrogen peroxide, nitric acid, etc.). Unlike rocket engines, jet engines carry only fuel, and atmospheric air is used as an oxidizer. Hence, jet engines are only suitable for operation in the Earth's atmosphere, whereas rocket engines are capable of service both in the atmosphere and in space.

Let us first consider the cycles of *jet engines*. Air-breathing engines are divided into turbojet and compressorless engines according to the principle of operation.

The schematic diagram of a *turbojet* is shown in Fig. 10.32. In this type of engine the liquid fuel, delivered from the fuel tanks, burns in the combustion chamber *1*. The products of combustion, upon expansion in the nozzle *2*, are then discharged into the surroundings. Air oxygen is the oxidizer for fuel combustion. The thermal efficiency of this engine is increased by introducing precompressed air. This air, drawn from the atmosphere through diffuser *3*, is compressed in an axial or centrifugal compressor *4* from which it is discharged into the combustion chamber. The compressor is driven from a special gas turbine *5* which is run by a portion of the products of combustion as they pass through it; the products of combustion then expand in the propelling nozzle.

It follows that the cycle of a turbojet engine is realized as follows (p-v diagram in Fig. 10.33). Air is compressed in the turbocompressor* from

* When a jet-propelled aircraft flies at high speeds, partial compression of the air takes place in the diffuser, due to stagnation (braking) of the free-stream flow of air in the diffuser.

atmospheric pressure p_1 to pressure p_2 along adiabat *1-2*. Then the heat released upon fuel combustion, q_1, is added to the working medium, this process proceeding under a constant pressure (isobar *2-3*). The working medium (compressed air + products of combustion) expands first in the gas turbine, and then in the propelling (jet) nozzle *3* of the engine along adiabat *3-4* (from point *3* to point *b* doing work in the gas turbine, and from point *b*

Fig. 10.32

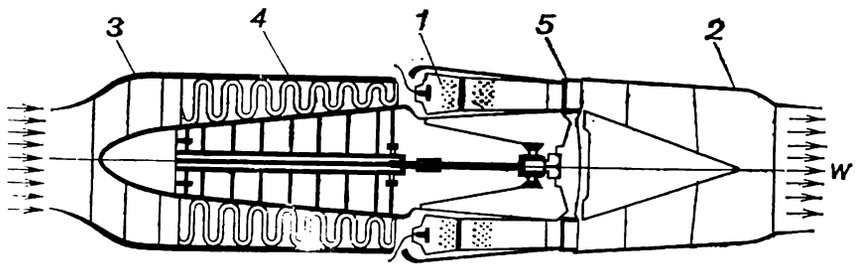

Fig. 10.33

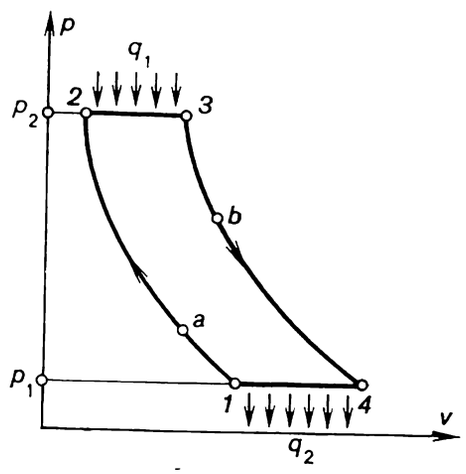

to point *4* accelerating the flow in the nozzle). The cycle is closed by isobar *4-1* at atmospheric pressure.

We see that the cycle of a turbojet engine does not differ from the cycle of a gas-turbine plant where combustion proceeds at p = const (see Sec. 10.2). Hence, the relationships previously derived are applicable to the turbojet cycle. At the present time turbojet engines are the basic type of engine for high-speed aircraft.

We now turn to the *compressorless jet engines*. Here there is no compressor, as the name implies, and compression of air is due to the conversion of the kinetic energy of the atmospheric air moving backwards relative to the aircraft, known as the ram effect.

Compressorless jet engines are divided into two groups: the ramjet and the pulsejet.

The schematic layout of a *ramjet* is shown in Fig. 10.34. There is no compressor or turbine in this engine. Atmospheric air is compressed in diffuser *1* from atmospheric pressure p_1 to p_2 and flows into combustion chamber *2* into which liquid fuel is injected. Combustion proceeds at a practically constant pressure (p_2 = const). The products of combustion, which are at a high temperature, discharge from the propelling nozzle *3*.

Thus, the cycle o a ramjet (shown on the p-v diagram in Fig. 10.35) consists of an adiabat representing compression of atmospheric air in the diffuser (process *1-2*), an isobar showing the process of fuel combustion (process *2-3*), an adiabat of air expansion in the propelling nozzle (process *3-4*), and the cycle closing isobar representing cooling of the products of combustion at atmospheric pressure (process *4-1*). The cycle of a ramjet is thermodynamically similar to that of a constant-pressure combustion gas

Fig. 10.34

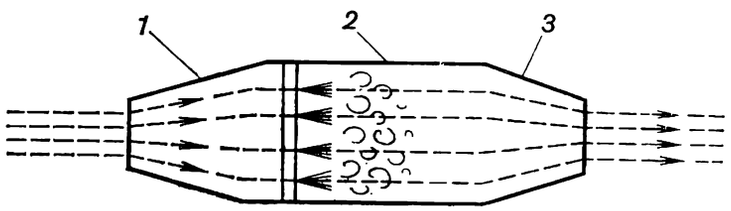

Fig. 10.35

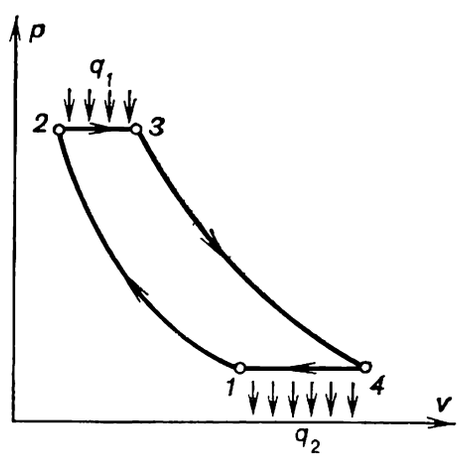

turbine and also to the cycle of a turbojet. In accordance with Eq. (10.53), the thermal efficiency of this cycle will be the higher the greater the pressure ratio $\beta = p_2/p_1$ (i.e. the higher the speed of the aircraft with the ramjet), which determines the dynamic pressure (head) of the stream of air, turning, as the air is decelerated in the diffuser, into static pressure. The thermal efficiency of a ramjet, consequently, increases with aircraft speed.

The dependence of the thermal efficiency of a ramjet cycle on aircraft speed (or, on the velocity of air relative to the aircraft) can be derived as follows.

Equation (10.53) for the thermal efficiency of a constant-pressure combustion gas engine (adiabatic air compression),

$$\eta = 1 - \frac{1}{\beta^{\frac{k-1}{k}}},$$

and Eq. (10.51) for adiabatic air compression,

$$\frac{T_1}{T_2} = \left(\frac{p_1}{p_2}\right)^{\frac{k-1}{k}},$$

yield that for this cycle

$$\eta = 1 - \frac{T_1}{T_2}, \tag{10.82}$$

where T_1 is the air temperature before compression, and T_2 the air temperature at the end of adiabatic compression.

If we denote the velocity of air relative to the aircraft (i.e. aircraft velocity) by w_1 and the velocity of air flowing into the combustion chamber by w_2, then, in accordance with the equation derived in Chapter 8, Eq. (8.8), we find that

$$i_2 - i_1 = \frac{w_1^2 - w_2^2}{2},$$

where i_1 and i_2 are the enthalpies of air before adiabatic compression (i.e. at the inlet of the ramjet diffuser) and after adiabatic compression (at the diffuser exit, i.e. at the inlet of the combustion chamber of the ramjet).

Assuming, as before, air to be an ideal gas with a constant heat capacity, for which

$$i_2 - i_1 = c_p (T_2 - T_1), \tag{10.83}$$

we obtain from Eq. (8.8):

$$c_p (T_2 - T_1) = \frac{w_1^2 - w_2^2}{2}. \tag{10.84}$$

Thus,

$$\frac{T_1}{T_2} = \frac{1}{1 + \frac{w_1^2 - w_2^2}{2c_p T_1}}. \tag{10.85}$$

Substituting the above expression into Eq. (10.82), we obtain the following relation for the thermal efficiency of a ramjet cycle:

$$\eta = \frac{1}{1 + \frac{2c_p T_1}{w_1^2 - w_2^2}}. \tag{10.86}$$

Ignoring the velocity in the combustion chamber ($w_2 \ll w_1$), we get

$$\eta = \frac{1}{1 + \frac{2c_p T_1}{w_1^2}}. \tag{10.87}$$

The dependence of the thermal efficiency of a ramjet engine on flight speed, calculated from Eq. (10.87), is represented graphically in Fig. 10.36.

It will be noted that from Eqs. (10.51) and (10.85) it follows that the dependence of the pressure ratio $\beta = p_2/p_1$ on flight speed is determined from the relationship

$$\beta = \left(1 + \frac{w_1^2 - w_2^2}{2c_p T_1}\right)^{\frac{k}{k-1}}. \tag{10.88}$$

Ramjets intended for subsonic and supersonic speeds should naturally be constructed differently. The schematic diagram of the ramjet, shown in Fig. 10.34, corresponds to subsonic speeds. It will be recalled that, as it was shown in Sec. 8.4, a subsonic stream is decelerated in a diverging nozzle, and the flow is accelerated in a converging nozzle; this kind of nozzle and diffuser are illustrated in Fig. 10.34. A ramjet for supersonic speeds is shown sche-

matically in Fig. 10.37. To be suitable for such flight conditions, the diffuser must have a converging section in which the supersonic flow is decelerated to sonic velocity; further deceleration of the flow then takes place in the diverging subsonic diffuser.

Fig. 10.36

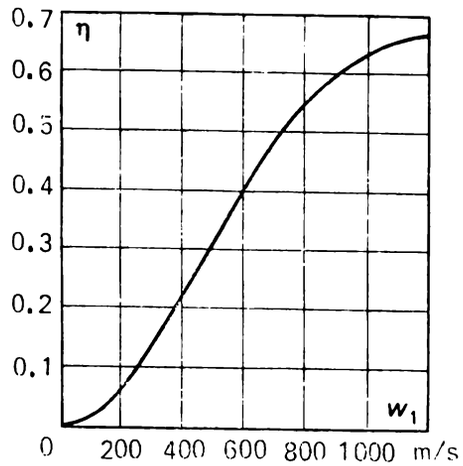

Fig. 10.37

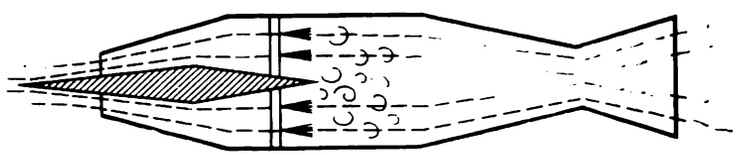

It ought to be mentioned, however, that, as is known from gas dynamics, the deceleration of a supersonic flow in a converging duct is accompanied by a number of shock waves inside the duct, which cause important losses in flow energy, a considerable deviation of the compression curve from an isentrop and a drop in the pressure ratio. In order to avoid this, diffusers are fitted with a sharp cone facing the flow which ensures a gas-dynamical rearrangement of flow from supersonic to subsonic upstream from the diffuser inlet. Thus, there is no need to fit a converging section (cone) in front of the diffuser. It is clear that the nozzle is made in the shape of a supersonic Laval nozzle.

Under subsonic conditions (take-off and landing) the diverging part of the Laval nozzle and diffuser cone are idle and serve no purpose; the engine acts as a subsonic plant whose schematic diagram is shown in Fig. 10.34.

With a flying speed equal to zero (aircraft take-off) the pressure ratio ensured by a ramjet is one, its thermal efficiency is zero, and the engine will fail to perform. Ramjet-powered aircraft are, therefore, fitted with special launching boosters to impart an initial speed.

These peculiarities of ramjets and their simple construction, small weight and size make this type of engine ideal for aeroplanes intended for high supersonic speeds.

The *pulsejet* whose performance cycle is shown in Fig. 10.38 on a *p-v* diagram, is fitted with a special valve-type device ensuring isolation of the combustion chamber from the diffuser and nozzle, so that the process of combustion proceeds at a constant volume. Periodic action characterizes this engine and gives it its name, the pulsejet. The cycle of a pulsejet is similar to the cycle of the constant-volume combustion gas turbine, previously studied.

As was shown in the preceding section, for the same pressure ratios and the same temperatures at the end of the process of expansion and with adia-

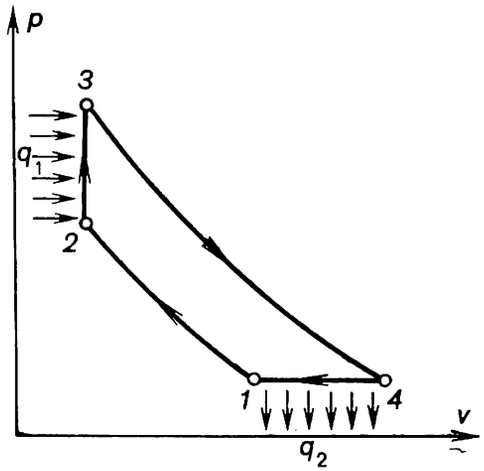

Fig. 10.38

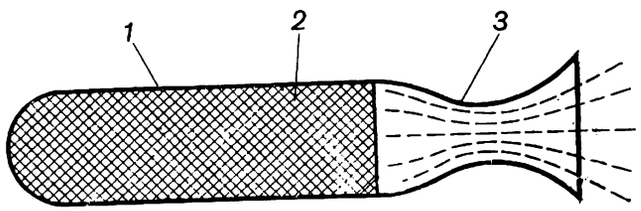

Fig. 10.39

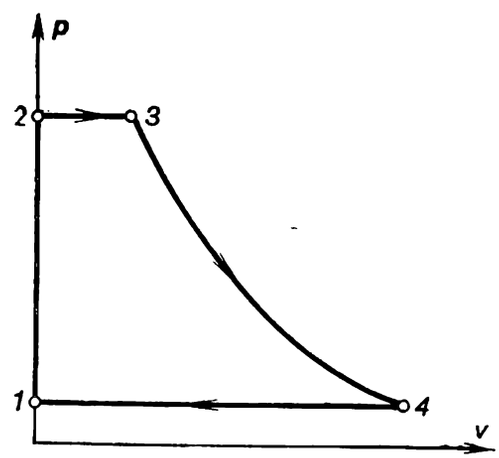

Fig. 10.40

batic air compression, the thermal efficiency of a constant-volume combustion cycle is higher than that of a constant-pressure combustion cycle.

Because of their intricate construction, the pulsejet have not yet found wide application.

Let us now examine the cycles of rocket engines.

Rocket engines are divided into chemical rocket engines and nuclear rocket engines.

Chemical rocket engines are divided, in turn, into two main groups: solid propellant rocket engines and liquid propellant rocket engines. In a *solid propellant rocket engine*, the solid fuel (usually powders of various kinds), containing both combustible substances and an oxidizer, takes fire when the rocket is being launched and burns out gradually, forming gaseous products of combustion which discharge from the nozzle. The schematic diagram of

a solid propellant rocket engine is illustrated in Fig. 10.39, showing combustion chamber *1*, solid propellant *2* and nozzle *3*.

An ideal cycle of a solid propellant rocket engine is shown on the *p-v* diagram in Fig. 10.40. When the engine is started, the pressure of the gaseous products of solid propellant combustion increases instantaneously from atmospheric pressure p_1 to some pressure p_2. In different types of engines, he magnitude of the pressure p_2 may reach tens and even hundreds of atmos-

Fig. 10.41

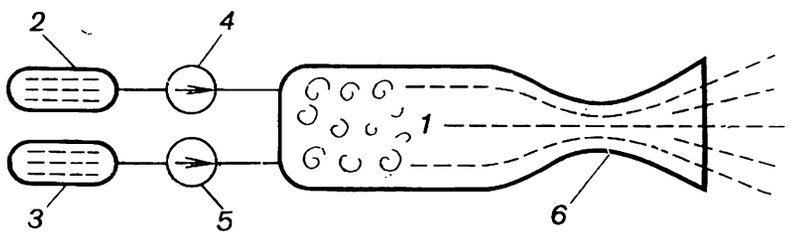

Fig. 10.42

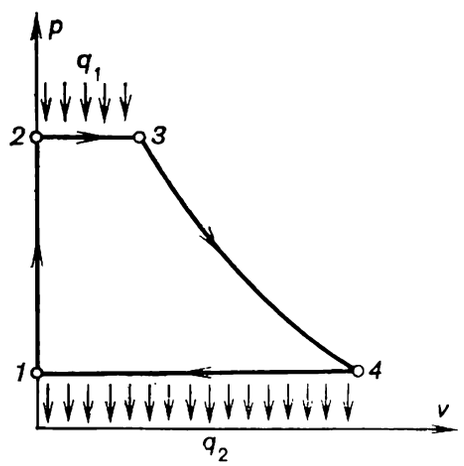

pheres; the pressure rises at so high a rate that this process may be considered as isochoric (line *1-2*).

It may be assumed that heat is added to the products of combustion isobarically (line *2-3*). The gaseous products of combustion then expand adiabatically in the nozzle (line *3-4*). The cycle is closed by isobar *4-1* representing the cooling of the products of combustion in the surrounding medium. In the combustion chamber, the density of the solid propellant products of combustion is so high compared with that of the gases leaving the nozzle that in Fig. 10.40 isochor *1-2* is depicted coinciding with the vertical axis.

Due to their simple design and convenient handling in operation, solid propellant rocket engines find an ever growing application in rocketry.

A schematic diagram of a *liquid propellant rocket engine* is presented in Fig. 10.41. The liquid propellant and the oxidizer are delivered into combustion chamber *1* from propellant tank *2* and oxidant tank *3* with the aid of pumps *4* and *5*. Combustion proceeds at a practically constant pressure p_2. The gaseous products of combustion flow through and discharge from the nozzle into the surroundings.

The ideal cycle of a liquid propellant rocket engine is plotted on the *p-v* diagram shown in Fig. 10.42.

The liquid propellant and oxidizer (or oxidant) are delivered into the combustion chamber at a pressure p_2. Therefore, in a liquid propellant rocket engine, not a gaseous working medium is compressed, as in a solid propellant engine, but the individual liquid components of this working medium. Inasmuch as liquid can be considered virtually incompressible, the compression of the components of the combustible mixture can be assumed to be isochoric. Since the density of liquid is much greater than that of the combustion products, in Fig. 10.42 the isochor *1-2* is plotted as practically coinciding with the vertical axis. The isobar *2-3* corresponds to the process of heat addition in the combustion chamber, and adiabat *3-4* represents expansion in the propelling nozzle. Isobar *4-1* (surroundings pressure) closes the cycle.

Thus, in principle, the cycle of a liquid propellant rocket engine is similar to the cycle of a solid propellant rocket engine.

The thermal efficiency of the ideal cycle of a liquid propellant rocket engine can be calculated as follows.

The amount of heat q_1 added during the isobaric process *2-3* is

$$q_1 = i_3 - i_2. \tag{10.89}$$

It should be emphasized here that, as above, we consider the products of combustion to be an ideal gas with a constant heat capacity; the amount of heat q_1, however, can not be calculated from formula (10.13),

$$q_1 = c_p (T_3 - T_2),$$

since the components of the combustible mixture enters the combustion chamber at a temperature T_2 in the liquid state, then evaporate and react chemically. Thus, on the isobar *2-3* the working medium changes phase; therefore the amount of heat q_1 should be calculated with the aid of the more general Eq. (10.89), instead of formula (10.13), to account for any transformation of the substance of this isobar.

The quantity q_2 can be presented in the form

$$q_2 = i_4 - i_1. \tag{10.90}$$

The general expression for the thermal efficiency of the cycle,

$$\eta = 1 - \frac{q_2}{q_1},$$

taking into account Eqs. (10.89) and (10.90), takes the following form:

$$\eta = 1 - \frac{i_4 - i_1}{i_3 - i_2}, \tag{10.91}$$

or, which is the same,

$$\eta = \frac{(i_3 - i_4) - (i_2 - i_1)}{(i_3 - i_1) - (i_2 - i_1)}. \tag{10.92}$$

The difference in enthalpies $(i_2 - i_1)$ is equivalent to the work expended by pumps *4* and *5* (Fig. 10.41) to raise the pressure of the liquid components of the combustible mixture during the isochoric process *1-2*.* Inasmuch

---

* It is clear that

$$i_1 = g i_1^{\text{prop}} + (1 - g)\, i_1^{\text{oxid}}$$

and

$$i_2 = g i_2^{\text{prop}} + (1 - g)\, i_2^{\text{oxid}},$$

where the indices "prop" and "oxid" refer to the propellant and oxidant, respectively, and g is the mass fraction of the propellant in the combustible mixture.

as the specific volumes of the liquid fuel (propellant) and oxidant are rather small, the work expended to ensure their compression is negligible compared with the amount of heat released upon combustion of the liquid propellant. The quantity $(i_2 - i_1)$ present in Eq. (10.92) can, therefore, be ignored. With this in mind, Eq. (10.92) gives the following expression for the thermal efficiency of the cycle of a liquid propellant rocket engine:

$$\eta \cong \frac{i_3 - i_4}{i_3 - i_1}. \tag{10.93}$$

Inasmuch as the difference in enthalpies $(i_3 - i_4)$ converts into the kinetic energy of the products of combustion as they discharge from the nozzle, in accordance with Eq. (8.8), ignoring the speed of the products of combustion at the nozzle inlet, we can write

$$i_3 - i_4 = \frac{w^2}{2}, \tag{10.94}$$

where w is the velocity with which the products of combustion leave the nozzle of a liquid propellant engine.

Taking into account relationship (10.94), Eq. (10.93) can be given the following form:

$$\eta = \frac{w^2}{2(i_3 - i_1)}. \tag{10.95}$$

Liquid-propellant rocket engines find wide application in rocketry and very often in aeronautical engineering.

Let us now consider the cycles of nuclear rocket engines*.

A possible design of a *nuclear rocket engine* is shown schematically in Fig. 10.43. The liquid working medium, contained in tank *1*, is forced to flow by pump *2* through the core of nuclear reactor *3*. In the nuclear reactor, heat is added to the working medium at a constant pressure. From the reactor the already gaseous working medium flows into nozzle *4* in which it expands and then discharges into the surroundings. It is clear that the cycle of a nuclear rocket engine is thermodynamically identical to the cycle of a liquid propellant rocket engine. Consequently, the thermal efficiency of the cycle realized in a nuclear rocket engine, just as that of a liquid propellant rocket engine, is determined by Eq. (10.95).

Another possible design of a nuclear rocket engine is represented schematically in Fig. 10.44. The liquid working medium, containing the nuclear fuel (uranium-235 or plutonium) in the form of a suspension or of another mixture, is delivered from tanks *1*, fitted with special devices that prevent a chain reaction, into "combustion" chamber *2*, where the mass of the nuclear fuel exceeds the critical mass and a chain reaction begins. The heat released during the nuclear reaction heats the working medium, which then expands in nozzle *3* and discharges into the surrounding medium. The cycle of this nuclear rocket engine is thermodynamically similar to the preceding one.

It should be noted that as distinct from jet engines and rocket engines with a chemical propellant, the working medium of nuclear jet engines is not a product of fuel combustion. This means that for a nuclear rocket engine

* Until now a nuclear rocket engine has not been built, but the possibility is widely discussed in the literature.

the working medium can be chosen on the basis of maximum thermodynamic expediency.

From Eq. (8.29) for the velocity of flow of an ideal gas through a nozzle*,

$$w=\sqrt{2\frac{k}{k-1}p_1v_1\left[1-\left(\frac{p_2}{p_1}\right)^{\frac{k-1}{k}}\right]},$$

Fig. 10.43

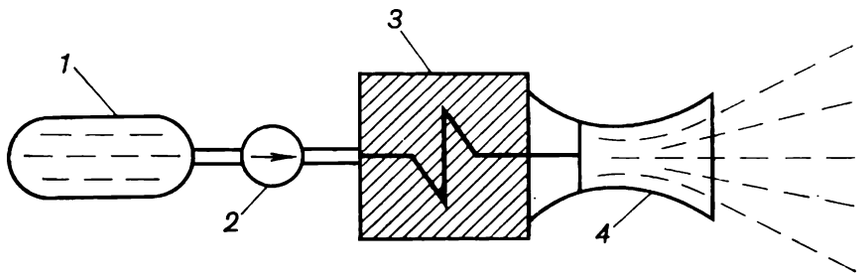

Fig. 10.44

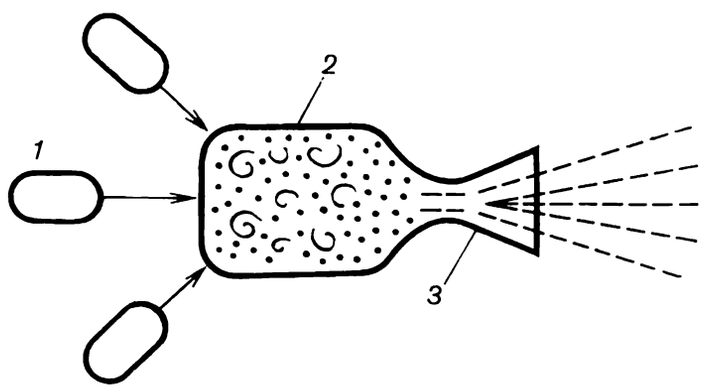

we obtain for the case of flow into an evacuated space (the pressure in outer space can be considered virtually zero), i.e. for $p_2 = 0$** we have:

$$w=\sqrt{2\frac{k}{k-1}p_1v_1}, \tag{10.96}$$

or, which is the same,

$$w=\sqrt{2\frac{k}{k-1}\frac{\mu RT_1}{\mu}}. \tag{10.97}$$

Since the quantity μR is constant, it follows from relationship (10.97) that maximum velocities of flow through a nozzle are ensured when gases with a small molecular weight μ are used. From this point of view the most advantageous working medium for a nuclear-powered, or nuclear, rocket is hydrogen H_2 ($\mu = 2$), which at the high temperatures in the "combustion" chamber of the nuclear reactor dissociates into atomic hydrogen ($\mu = 1$).

* It will be recalled that this equation is applicable for any values of (p_2/p_1) if the gas flows through a Laval nozzle.

** For adiabatic discharge in an evacuated space (back pressure $p_2 = 0$) it follows from Eq. (7.61) that $T_2 = 0$ K, i.e. at the nozzle exit the gases are at the absolute zero temperature. This means that the entire enthalpy of the gas turns into the kinetic energy of gas flow.

Besides hydrogen, helium, water vapour (steam) and hydrogen compounds of light elements are possible working media for nuclear rocket engines.

We must note that although the thrust of nuclear rocket engines is small compared with the thrust of liquid (or solid) propellant rocket engines, a nuclear engine is capable of operating for a considerably longer time (several orders of magnitude longer) than a rocket engine firing a chemical (liquid or solid) propellant. Nuclear rockets, therefore, are the most suitable type of engine for manned interplanetary spaceflights. It appears that a spaceship should be launched from the Earth with the aid of liquid or solid propellant engines, with a nuclear rocket engine used for flying in space outside the Earth's gravity.

11

Vapour power cycles

In modern heat and power engineering, stationary steam power plants are usually used. Heat power plants in which steam is used as a working medium have many peculiarities, which make them quite different from thermopower plants with a gaseous working medium.

The most widespread, available and cheap working medium for vapour power cycles is water. The specific requirements imposed on the working media of steam power plants are formulated in Sec. 11.6 on the basis of an analysis of the methods to raise the effectiveness of the cycles of these plants. At present, suffice it to say that it is desirable to have the working medium at room temperature and atmospheric pressure in a liquid state.

11.1 The Carnot cycle

A working medium which changes its state of aggregation throughout a cycle permits a practical realization of the Carnot cycle.

It will be recalled that the Carnot cycle comprises two adiabats and two isotherms. A practical realization of adiabatic processes involves no great difficulties. The deviation of real adiabatic processes of expansion and compression from an isentrop because of the irreversibility of flow processes leads, of course, to a decrease in the thermal efficiency of a cycle. However, this decrease is insignificant.

In practice, isothermal addition and rejection of heat in gas thermopower plants involves insurmountable difficulties. As it was shown in Sec. 7.9 and in Chapter 10, to realize actual processes as close to isothermal processes as possible, multistage air compression is undertaken with intermediate cooling of the compressed air (in compressors) and gradual addition of heat (in gas-turbine plants).

Vapour power cycles are quite different.

When a substance is in flow, the isobaric process of heat addition and rejection can be most simply realized. The process of isobaric heat addition and rejection at a constant temperature was already considered above.

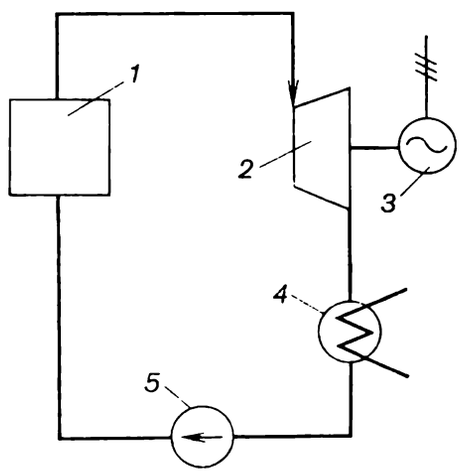

Fig. 11.1

This process involves a change of phase of a pure substance, from a liquid state into a gaseous state. In fact, inside the two-phase region of a pure substance isobars coincide with isotherms, consequently, the isobaric process of heat addition to wet steam (i.e. vapourization), just as the isobaric process of heat rejection from wet steam (i.e. condensation), which are easily realized in practice, are also isothermal processes. It follows that if wet vapour (steam) is used as a working medium, the resulting cycle, composed of two adiabats and two isobars (which are also isotherms), will be the Carnot cycle.

A schematic diagram of a thermopower plant in which a Carnot cycle is realized with wet steam as a working medium is shown in Fig. 11.1. Wet steam with a small dryness fraction x flows into steam boiler *1*. By the fuel burned in the boiler furnace (coal, fuel oil, natural gas, etc.) heat is added to the wet steam and its dryness fraction rises to a value close to one. In the boiler heat is added to the steam at a constant pressure p_1 and a constant temperature T_1.

Steam flows from the boiler into steam turbine *2*. Upon expansion in the turbine the steam flow acquires a considerable kinetic energy which converts on the turbine blades into the kinetic energy of rotation of the turbine wheel; the kinetic energy is then converted into electric power with the aid of electric generator *3* rotated by the steam turbine.

At the turbine's exit the wet steam is at a pressure p_2 and a temperature T_2 corresponding to this pressure. Steam then flows into condenser *4*, a heat-exchanger in which cooling water removes heat from the steam; steam condenses in the condenser, and, consequently, its dryness fraction diminishes.

The process of heat rejection from the steam in the condenser proceeds at a constant pressure.

From the condenser wet steam enters compressor *5* where it is compressed adiabatically to pressure p_1. Wet steam then flows again into the boiler and the cycle closes.

Therefore, on the section of the cycle covering the compressor's exit to the turbine's entry the pressure of the working medium is p_1, and on the section from the turbine exit to the compressor's entry the pressure of the working fluid is p_2. Of course, due to the inevitable hydraulic losses suffered as the steam flows through pipelines, the pressure drops somewhat

Fig. 11.2

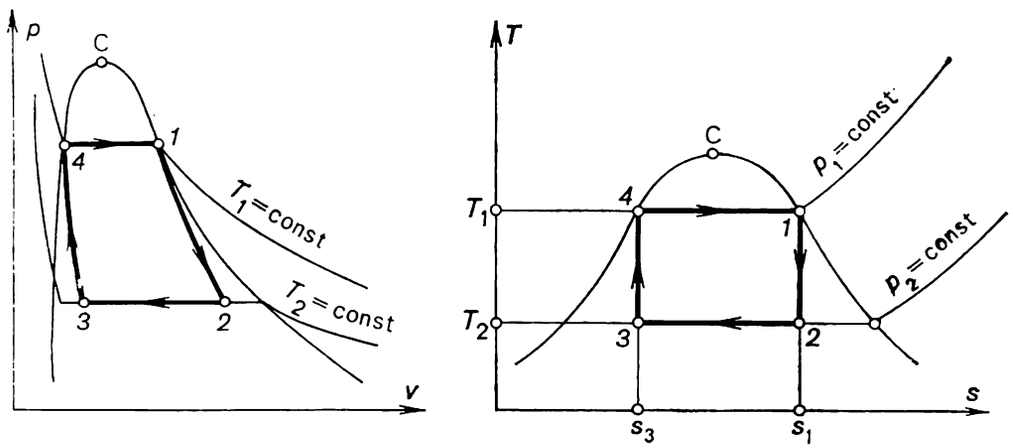

along the flow, but this pressure drop can be ignored in the first approximation.

The cycle described is shown on *p-v* and *T-s* diagrams in Fig. 11.2.

In the boiler heat q_1 is added to the steam along isobar-isotherm *4-1*, steam expands in the turbine along adiabat *1-2*, heat q_2 is rejected in the condenser along isobar-isotherm *2-3*, and steam is compressed in the compressor along adiabat *3-4*. In the course of adiabatic expansion from the state close to the right boundary curve into the state close to the left boundary curve, the wetness of the steam increases. Heat should be rejected in the condenser until the wet steam reaches the state determined by the following condition: when compressed adiabatically from state *3* with a pressure p_2 to state *4* with a pressure p_1, the final state of the working fluid should not lie outside the saturation region.

The thermal efficiency of a reversible Carnot cycle realized with wet steam, just as of the Carnot cycle realized with any other working medium, is determined from Eq. (3.32):

$$\eta = \frac{T_1 - T_2}{T_1}.$$

An actual cycle involving wet steam and composed of two isobar-isotherms and two adiabats is represented on the *T-s* diagram shown in Fig. 11.3, taking into account the irreversible friction losses suffered when the steam expands in the turbine and is compressed in the compressor. The difference $(s_2 - s_1)$ represents the increase in enthalpy of steam as a result of adiabatic expansion, due to friction, and $(s_4 - s_3)$ is the increase in the enthalpy of steam upon compression in the compressor.

It follows that the Carnot cycle can be realized with wet steam. Inasmuch as the critical temperature of water is low (374.15 °C), the difference between the lower (about 25 °C) and higher (not exceeding 350 °C) cycle temperatures is also small, since in approaching the critical point the length of the isobar-isothermal section *4-1* reduces considerably and, consequently, the non-isentropic sections *1-2* and *3-4*, reducing the thermal efficiency of the cycle, become more important; the area ratio of the cycle diminishes (Fig. 11.3). However, even within that comparatively narrow interval of limiting temperatures, the efficiency of a reversible Carnot vapour cycle is of consider-

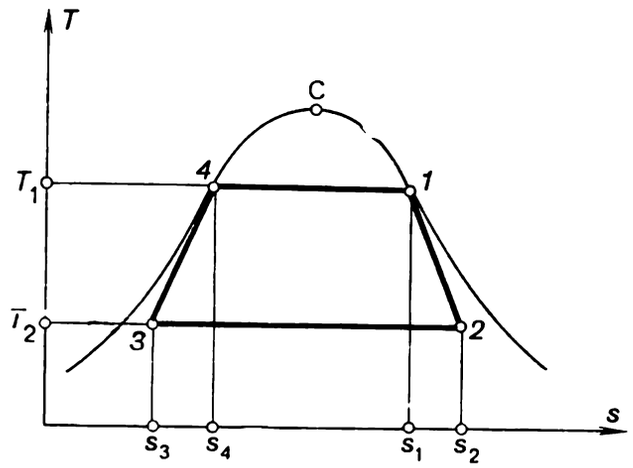

Fig. 11.3

able magnitude

$$\eta = 1 - \frac{25 + 273.15}{350 + 273.15} = 0.52.$$

Nevertheless, taking into account the operating conditions for the equipment of a thermal power plant, it is inexpedient to realize this cycle in practice. When operating with wet steam, a mixture of dry steam and suspended droplets of water, the bladings of the turbine and compressor operate under very difficult conditions, the flow of the working medium is imperfect from the viewpoint of gas-dynamics and the internal relative efficiency of these machines, $\eta_{i.r.}$, diminishes.

As a result, the internal absolute efficiency of the cycle

$$\eta_i^c = \eta \eta_{i.r.}^c$$

is relatively low

It is also important that the compressor used to compress wet steam at low pressures and great specific volumes is a rather cumbersome device, requiring an excessively high-power drive.

For these reasons the Carnot cycle for wet steam has not found practical application.

11.2 The Rankine cycle

These shortcomings inherent in a steam power plant realizing the Carnot cycle with wet steam can be partly remedied if heat is rejected from the wet steam in the condenser before the entire steam condenses. Thus, not wet steam with a small density but water is compressed from pressure p_2 to pressure p_1. Compared to the specific volumes of wet steam at point *3*

(see the T-s diagram in Fig. 11.2), the specific volume of water is small. Its compressibility is also negligible compared with that of wet steam. Water is displaced from the condenser into the boiler and its pressure is simultaneously increased not with the aid of compressors but pumps of compact design, simple arrangement and actuated by a rather low-power drive.

Such a cycle was suggested in the 1850's almost simultaneously by the Scottish engineer and physicist W. Rankine and by R. Clausius, and the cycle is usually called the *Rankine cycle*. The schematic layout of a steam power plant operating on a Rankine cycle is similar to the schematic layout depicted in Fig. 11.1, the only difference being that in the Rankine cycle the *5* denotes a water pump and not a wet-steam compressor.

Fig. 11.4

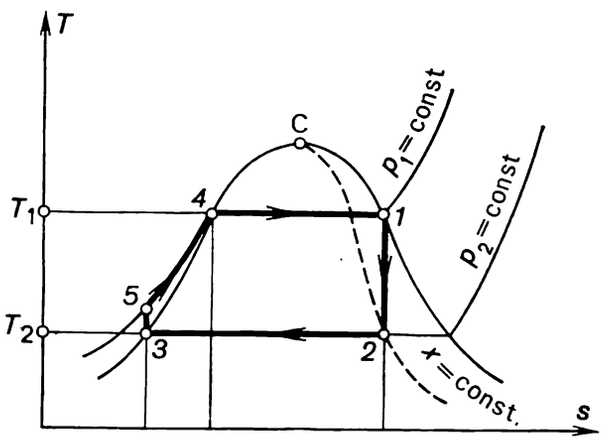

Figure 11.4 shows the Rankine cycle on a T-s diagram. In the condenser wet steam condenses completely along the isobar p_2 = const (point *3* in Fig. 11.4). Water is then compressed in the pump from the pressure p_2 to the pressure p_1; this adiabatic process is represented on the T-s diagram by the vertical line *3-5*.

The length of line *3-5* is small; as was already mentioned in Chapter 6, in the liquid region the isobars are plotted on the T-s diagram very close to one another. Thus, when water at a temperature of 25 °C and a saturation pressure of 3.1 kPa (0.032 kgf/cm²) is compressed isentropically to a pressure of 29 400 kPa (300 kgf/cm²), water temperature rises by less than 1 °C, and we can assume with a good degree of accuracy that in the liquid region the isobars for water virtually coincide with the left boundary curve. Therefore, in plotting the Rankine cycle on a T-s diagram, in the water region the isobars are shown as merging with the left boundary curve.

The small length of adiabat *3-5* is evidence of the small amount of work expended by the pump to compress the water.

It will be recalled that, as was shown in Sec. 7.9, the work spent to compress the gas from pressure p_2 to pressure p_1 in a compressor is determined from relationship (7.188), which for 1 kg of working medium takes the following form:

$$l_{21} = \int_{v(p_2)}^{v(p_1)} p\,dv$$

[since $v(p_1) < v(p_2)$, we have $l_{21} < 0$], and the work expended to realize the entire compressor cycle (the *mechanical work of compression*) is determined

from the formula

$$l = -\int_{p_2}^{p_1} v\,dp.$$

It will also be recalled that for adiabatic compression, in accordance with Eq. (8.15),

$$l = -(i_{\text{out}} - i_{\text{in}}),$$

where i_{out} and i_{in} are the enthalpies of the gas at the compressor outlet (pressure p_1) and before compression (pressure p_2), respectively.

Equations (7.188) and (7.195a) do not depend on the substance compressed; of course, the equations also hold for the compression of liquid with the aid of a pump.

As a first approximation, quite sufficient for technical calculations, water can be assumed as virtually incompressible (v_w = const, i.e. $dv_w = 0$) and, consequently,

$$l_{\text{comp}} = 0.$$

As to the mechanical work done by a pump, taking in Eq. (7.195a) the quantity v_w outside the integral sign, we obtain:

$$l_{\text{pump}} = -v_w(p_1 - p_2) \tag{11.1}$$

(the minus sign indicates that work must be transferred to the pump from an external source of work).

The mechanical work done by a pump to compress water is also small. For instance, if water is compressed from a pressure $p_2 = 3.1$ kPa (0.032 kgf/cm^2) to a pressure $p_1 = 49\,030$ kPa (500 kgf/cm^2), according to Eq. (11.1), the work of the pump is

$$l_{\text{pump}} = 49.0 \text{ kJ/kg } (11.7 \text{ kcal/kg})^*.$$

The same result can be obtained, using equation (8.15). For this purpose, with the aid of an *i-s* diagram or Steam Tables, we find the difference between the enthalpies of water on a given isentrop at pressures p_1 and p_2.

The feed pump delivers water at a pressure p_1 to the boiler in which heat is added isobarically at p_1 = const. In the boiler water is first heated to the boiling point (section *5-4* of the isobar p_1 = const in Fig. 11.4) and then vapourized (section *4-1* of the isobar p_1 = const in Fig. 11.4). The dry saturated vapour, generated in the boiler, passes into the turbine; the process of steam expansion in the turbine is represented by the adiabat *1-2*. The waste wet steam is exhausted into the condenser and the vapour cycle closes.

From the viewpoint of thermal efficiency the Rankine cycle seems to be less expedient than the reversible Carnot cycle depicted in Fig. 11.2, inasmuch as the area ratio (just as the average temperature of heat addition) is less for the former. However, allowing for the practical conditions under which the cycle is to be realized and also for the considerably smaller effect

* It will be noted for comparison that to compress an ideal gas in the same pressure interval several times more work must be expended [for instance, for an ideal gas with $k = 1.4$ and $R = 490$ J/(kg-K) the work of compression will be 5380 kJ/kg (1285 kcal/kg)].

of the irreversibility of the process of water compression, compared with the compression of wet vapour, on the overall efficiency of a cycle, the Rankine cycle is more economical than the corresponding Carnot cycle for wet steam. At the same time the replacement of the cumbersome compressor, ensuring

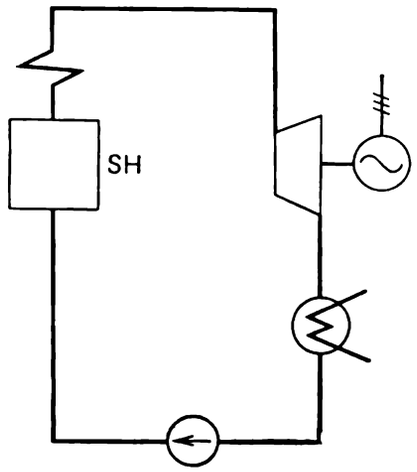

Fig. 11.5

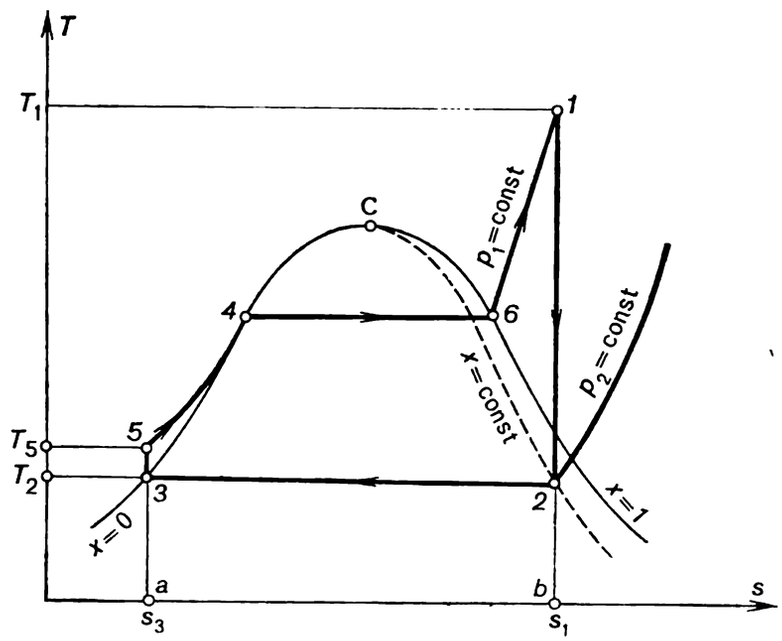

Fig. 11.6

compression of the wet steam with a compact feed water pump permits a substantial reduction in the costs involved in building a steam power plant, and a simplification of its maintenance.

Thus, the internal absolute efficiencies of the two cycles will be approximately the same.

The thermal efficiency of the Rankine cycle is increased by *superheating the steam* in a special element of the steam boiler, the *steam superheater* (denoted SH in Fig. 11.5) in which steam is heated to a temperature exceeding the saturation temperature at the given pressure p_1. The *T-s* diagram of the Rankine cycle with superheated steam is shown in Fig. 11.6. With superheating the mean temperature of heat addition increases compared with the temperature at which heat is added in a cycle without superheat. Consequently the thermal efficiency of the cycle increases too.

It can be seen from Fig. 11.6 that in the Rankine cycle with superheat the process of steam expansion in the turbine *1-2*, realized up to the same

pressure as before, p_2, ends inside the two-phase region at a dryness fraction higher than in the cycle depicted in Fig. 11.4. Because of this, the turbine blading operates under lighter conditions and, consequently, there is an increase in the internal relative efficiency of the turbine and in the internal efficiency of the cycle η_i^c; for a cycle with superheat the efficiency increases both because of an increase in η and in the internal relative efficiency $\eta_{i.r}^c$.

The Rankine cycle with superheat is the basic cycle for thermopower plants with application in up-to-date heat and power engineering.

The quantity of heat added to the working medium in the cycle, q_1, is represented on the T-s diagram shown in Fig. 11.6 by the area *a-3-5-4-6-1-b-a*. The heat rejected in the cycle, q_2, is equivalent to area *a-3-2-b-a*, and the work output of the cycle, to area *3-5-4-6-1-2-3*.

Since in the Rankine cycle the processes of heat addition and rejection are isobaric, and in an isobaric process the quantity of heat added (rejected) is equal to the difference between the enthalpies of the working medium at the beginning and end of the cycle, as applied to the Rankine cycle, we can then write

$$q_1 = i_1 - i_5 \tag{11.2}$$

and

$$q_2 = i_2 - i_3 \tag{11.3}$$

(the subscripts for i correspond to the notations of the state of the working medium used in Fig. 11.6).

Here, i_1 is the enthalpy of superheated water vapour (steam) at the exit of the boiler* (at a pressure p_1 and a temperature T_1); i_5 is the enthalpy of water at the boiler inlet, i.e. at the pump outlet (at a pressure p_1 and a temperature T_5); i_2 is the enthalpy of wet steam at the turbine exit (exhaust steam), i.e. at the condenser inlet (at a pressure p_2 and with a dryness fraction x); and i_3 is the enthalpy of water at the condenser outlet (equal to the enthalpy of water on the saturation line, i', at the saturation temperature T_2 determined directly by pressure p_2).

Taking the above relationship into account, from the general expression for thermal efficiency of a cycle,

$$\eta = \frac{q_1 - q_2}{q_1},$$

applied to the reversible Rankine cycle we have:

$$\eta = \frac{(i_1 - i_5) - (i_2 - i_3)}{i_1 - i_5}. \tag{11.4}$$

This equation can be presented in the following form:

$$\eta = \frac{(i_1 - i_2) - (i_5 - i_3)}{i_1 - i_5}. \tag{11.4a}$$

The difference $(i_1 - i_2)$ represents the available enthalpy drop converted into the kinetic energy of flow and then, into work in the turbine. In accordance with Eq. (8.15), the difference $(i_5 - i_3)$ represents the mechanical work of the pump. Thus, the work of the cycle can be considered as the difference between the work done in the turbine and the work expended to drive the pump.

* It is assumed for the sake of simplicity that on the way from the boiler to the turbine steam pressure and temperature do not change. Actually, due to the resistance to steam flow offered by the steam pipeline and the inevitable heat losses, the pressure and temperature of steam drop somewhat.

If we introduce the following notations:

$$l_{\text{turb}}^{\text{theor}} = i_1 - i_2 \tag{11.5}$$

and

$$l_{\text{pump}}^{\text{theor}} = i_5 - i_3, \tag{11.6}$$

then

$$l_{\text{c}}^{\text{r}} = l_{\text{turb}}^{\text{theor}} - l_{\text{pump}}^{\text{theor}}; \tag{11.7}$$

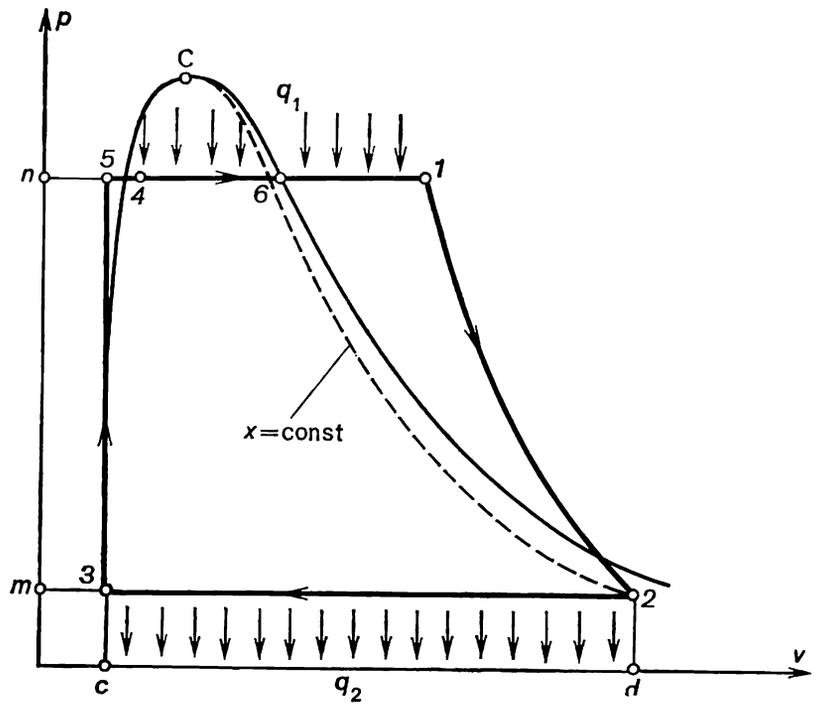

Fig. 11.7

the superscripts "theor" and "r" indicate that these quantities pertain to a theoretical reversible cycle, not accounting for losses due to the irreversibility of real processes.

The quantity $l_{\text{turb}}^{\text{theor}}$ should not be confused with the work of expansion, and $l_{\text{pump}}^{\text{theor}}$ with the work of compression in a cycle. The Rankine cycle is represented on the *p-v* diagram in Fig. 11.7 (the notations are the same as in Fig. 11.6). On this diagram the isobar *5-4-6-1* (p_1 = const) represents the addition of heat in the cycle, line *1-2* shows adiabatic expansion of steam in the turbine, line *2-3* is the isobar (p_2 = const) along which heat is rejected in the condenser, and line *3-5* represents the adiabatic compression of water in the pump (due to the small compressibility of water, this adiabat practically coincides with an isochor). As can be seen from this diagram, the work of expansion is equal to the area *c-5-1-2-d-c*, the work of compression to the area *c-3-2-d-c*, and the work output of the cycle is represented by area *1-2-3-5-1*.

The quantities $l_{\text{turb}}^{\text{theor}} = i_1 - i_2$ and $l_{\text{pump}}^{\text{theor}} = i_5 - i_3$ are represented on the *p-v* diagram in the following manner. In accordance with Eq. (8.15), $(i_1 - i_2)$ is represented by area *1-2-m-n-1*. Equation (7.195a) indicates that the difference $(i_5 - i_3)$ is represented by area *5-3-m-n-5*. It follows that the work output of the cycle, equal to the difference $(l_{\text{turb}}^{\text{theor}} - l_{\text{pump}}^{\text{theor}})$, is represented by area *1-2-3-5-1*.

Taking into account Eq. (11.1) for the mechanical work performed by the pump,

$$i_5 - i_3 = v_w (p_1 - p_2), \tag{11.8}$$

for relationship (11.4a) we have:

$$\eta = \frac{(i_1 - i_2) - v_w (p_1 - p_2)}{i_1 - i_5}. \tag{11.9}$$

Equations (11.4a) or (11.9) make it possible to determine with the aid of an *i-s* diagram or Steam Tables the thermal efficiency of the reversible Rankine cycle in terms of the known initial parameters of the steam (i.e. the steam pressure p_1 and temperature T_1 at the turbine inlet) and the steam pressure p_2 in the condenser.

Thus, if the initial steam conditions are pressure $p_1 = 16\,670$ kPa (170 kgf/cm²) and temperature $T_1 = 550$ °C, and condenser pressure is maintained equal to $p_2 = 4$ kPa (0.04 kgf/cm²), the magnitude of the thermal efficiency η is calculated in the following way. From the Steam Tables* we find that at a pressure of 16 670 kPa (170 kgf/cm²) and a temperature of 550 °C the enthalpy of steam is $i_1 = 3438$ kJ/kg (821.2 kcal/kg), the entropy of steam $s_1 = 64\,619$ kJ/(kg-K) [15 434 kcal/(kg-K)]. Now an *i-s* diagram is used to find the enthalpy of wet steam i_2 at a pressure $p_2 = 4$ kPa (0.04 kgf/cm²) and the same as at point *1*, value of entropy (in a reversible process the expansion adiabat coincides with an isentrop). This enthalpy is $i_2 = 1945$ kJ/kg (464.5 kcal/kg).

The enthalpy of water on the saturation line at a pressure $p_2 = 4$ kPa (0.04 kgf/cm²) is $i_3 = 120$ kJ/kg (28.7 kcal/kg). The entropy of water in this state is equal to 0.4178 kJ/kg-K [0.0998 kcal/(kg-K)]. From the Steam Tables we find the value of the enthalpy of water at point *5* (the pump exit) at a pressure 16 670 kPa (170 kgf/cm²) and at the same value of the entropy as at point *3*: $i_5 = 137$ kJ/kg (32.7 kcal/kg); the temperature of water $T_5 = 29$ °C.

Thus, $i_1 - i_2 = 1493$ kJ/kg (356.7 kcal/kg); $i_5 - i_3 = 17$ kJ/kg (4.0 kcal/kg); $i_1 - i_5 = 3301$ kJ/kg (788.5 kcal/kg). Substituting these values into Eq. (11.4a), we obtain the thermal efficiency of this reversible Rankine cycle, $\eta = 0.46$. It will be indicated for the sake of comparison that the thermal efficiency of a reversible Carnot cycle realized in the same temperature interval (550 °C to 28.6 °C) is $\eta^{\text{r.c.c.}} = 0.63$, much greater than the thermal efficiency of the reversible Rankine cycle calculated above.

Figure 11.8 shows the Rankine cycle on an *i-s* diagram (the notations are the same as on the *T-s* and *p-v* diagrams shown in Figs. 11.6 and 11.7). It is clear, in accordance with Eq. (11.4a), that on this diagram the distance along the *i*-axis between points *1* and *2* corresponds to the work done by the turbine, the distance between points *5* and *3* represents the work expended in the pump, the distance between points *1* and *5* represents the heat q_1 added in the cycle, and the distance between points *2* and *3* shows the amount of heat q_2 rejected in the cycle.

If the work done by the pump, $i_5 - i_3$, is negligible compared with the drop in enthalpy in the turbine, $i_1 - i_2$, i.e. if we consider that $i_3 \cong i_5$, then Eq. (11.4a) can be presented in the following form:

$$\eta = \frac{i_1 - i_2}{i_1 - i_3}. \tag{11.10}$$

---

* This example pertains to the cycle of an actual steam-turbine plant operating under the following initial conditions: $p_1 = 170$ kgf/cm² and $T_1 = 550$ °C, at a condenser pressure $p_2 = 0.04$ kgf/cm². The values of *i* and *s* used in the calculation are taken from Steam Tables compiled on the basis of rounded values of pressures, expressed in kgf/cm², while in up-to-date Steam Tables the values of *i* and *s* are given in kcal/kg and kcal/(kg-K), respectively, and then converted into units of the SI system. This also pertains to the example considered in Sec. 11.3.

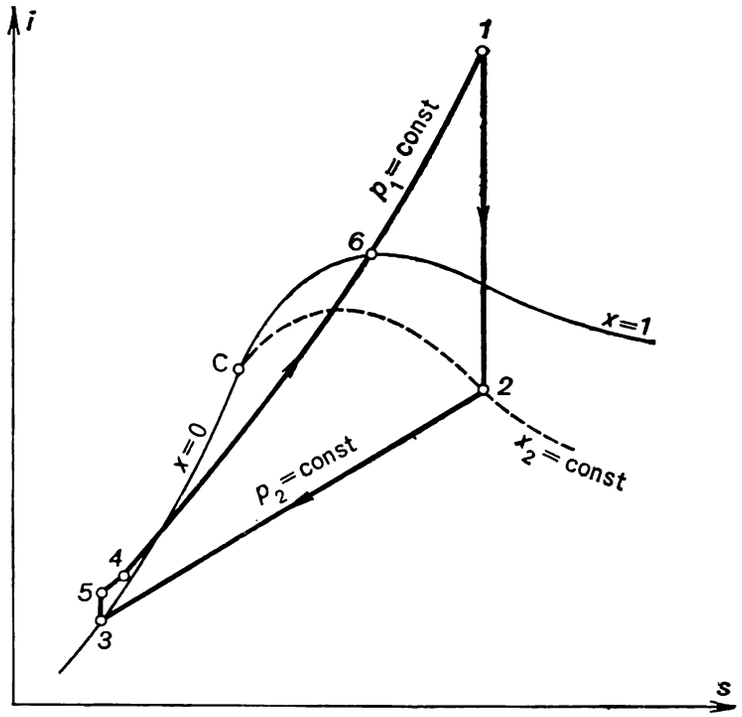

Fig. 11.8

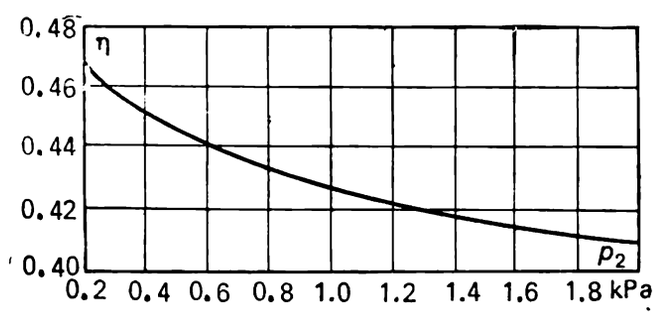

Fig. 11.9

This relationship is quite suitable for estimating calculations of low-pressure steam power cycles. When dealing with high-pressure steam power plants the work of the pump cannot be ignored.

Let us find the dependence of the thermal efficiency of the Rankine cycle on the initial conditions of the steam.

Under the same initial steam conditions (p_1 and T_1) a decrease in condenser pressure p_2 leads to a higher thermal efficiency: inasmuch as in the two-phase region pressure is directly related with temperature, a decrease in p_2 means a decrease of the temperature at which heat is rejected in the cycle, T_2. Thus, the temperature interval of the cycle widens and the thermal efficiency rises.

The nature of the dependence of thermal efficiency η on condenser pressure p_2 is illustrated graphically in Fig. 11.9. This graph is plotted for the above cycle realized with initial steam conditions $p_1 = 16\,670$ kPa (170 kgf/cm²) and $T_1 = 550\,°C$; the values of the thermal efficiency are calculated with the aid of Eq. (11.4a).

In modern steam power plants condenser pressure p_2, usually predetermined by the temperature of the condenser cooling water, is 3.5 to 4.0 kPa (0.035 to 0.040 kgf/cm²); a pressure of 4.0 kPa (0.04 kgf/cm²) corresponds to a saturation temperature $T_2 = 28.6\,°C$. A further reduction of condenser

pressure is inexpedient. First, a greater rarefaction (vacuum) causes the specific volume of the exhaust steam flowing into the condenser from the turbine to increase, requiring a larger condenser and much longer blades

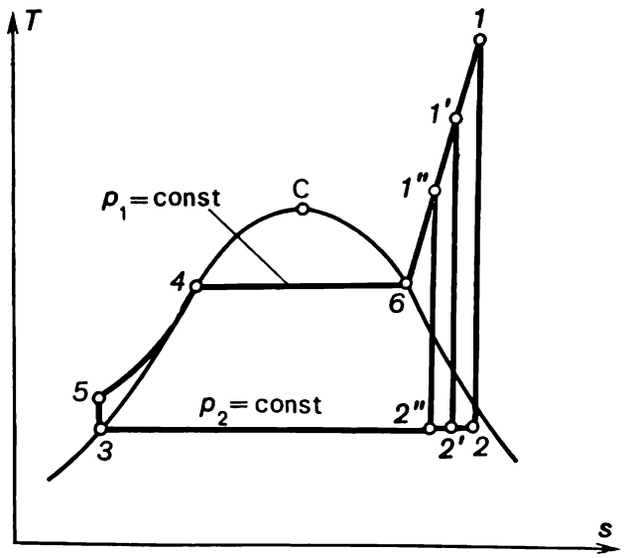

Fig. 11.10

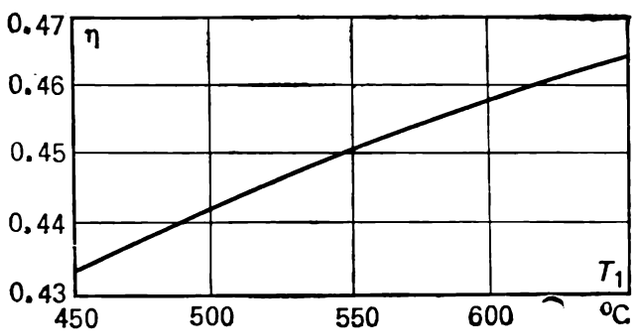

Fig. 11.11

in the last turbine stages. Second, a greater rarefaction causes the temperature of the wet steam in the condenser to decrease (for a pressure of 3.0 kPa the water saturation temperature is 23.8 °C, and for a pressure of 2.0 kPa it is 17.2 °C), resulting in a very small difference between the temperatures of the condensing steam and the condenser cooling water* to which the condenser's external surfaces are exposed, requiring a larger condenser.

However, the thermal efficiency of the Rankine cycle depends above all on the initial steam condition, p_1 and T_1. With a rise in superheat temperature T_1 at the same pressure the thermal efficiency of the cycle increases, since there is a higher mean temperature of heat addition in the cycle, as illustrated in Fig. 11.10. To illustrate, Fig. 11.11 shows a graph on which the thermal efficiency is plotted against T_1 for a Rankine cycle in which the initial steam pressure p_1 = 16 670 kPa (170 kgf/cm²), and the pressure of steam in the condenser p_2 = 4.0 kPa (0.04 kgf/cm²). If T_1 is constant, an increase in the pressure p_1 also leads to a rise of the thermal efficiency of the cycle; the higher the p_1, the greater the cycle areas ratio and the higher the mean temperature of heat addition (Fig. 11.12).

* Cooling water is delivered into condensers from rivers, lakes or from water-cooling towers; it is clear that the temperature of the water depends on climatic conditions and varies during the year: it may vary from 0 to 30 °C.

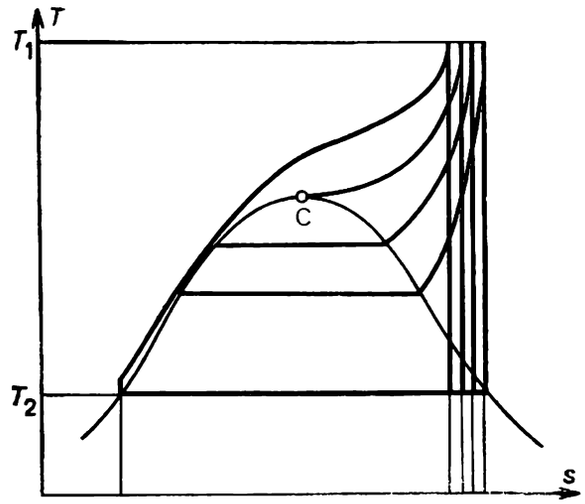

Fig. 11.12

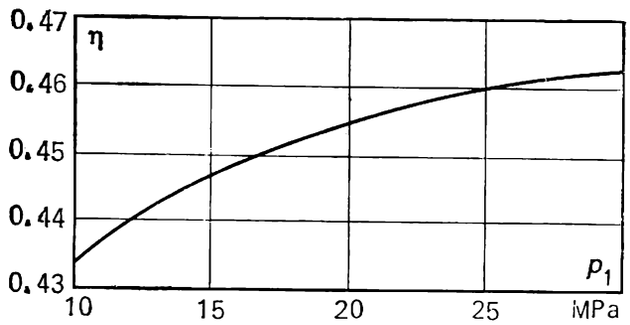

Fig. 11.13

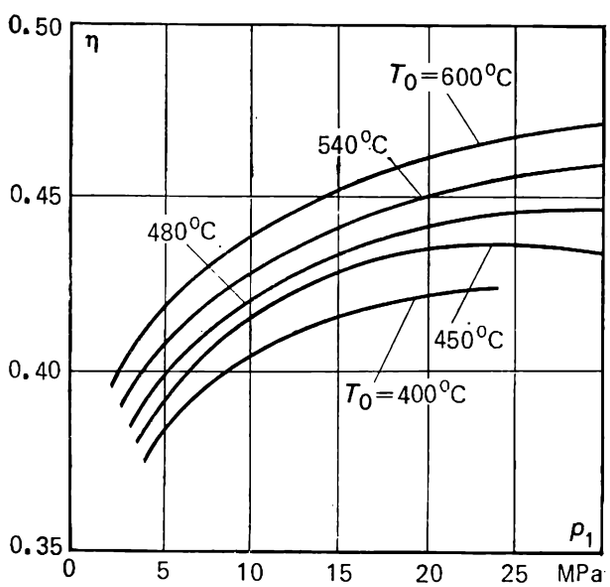

Fig. 11.14

However, with rising p_1 at the same superheat temperature, the wetness of exhaust steam (at the turbine exit) increases involving a drop in turbine relative internal efficiency. Therefore, when raising the initial steam pressure, it is also desirable to increase the throttle steam temperature. In Fig. 11.13 the thermal efficiency of the Rankine cycle is plotted against p_1 at a superheat temperature $T_1 = 550$ °C and $p_2 = 4.0$ kPa (0.04 kgf/cm²).

It is clear that the higher the steam pressure p_1 and temperature T_1, the higher the thermal efficiency of the Rankine cycle. In Fig. 11.14 the thermal efficiency η of the reversible Rankine cycle is plotted against p_1.

Thus, to raise the thermal efficiency of a Rankine cycle, in principle an attempt should be made to raise the initial steam conditions.

At present the basic initial steam conditions practised in Soviet electric power stations are $p_1 = 23\,500$ kPa (240 kgf/cm²) and $T_1 = 565$ °C. Pilot plants are being operated with steam conditions $p_1 = 29\,400$ kPa (300 kgf/cm²) and a throttle steam temperature up to $T_1 = 650$ °C.

A further increase in the initial steam conditions is restricted by the properties of the construction materials presently available: at high pressures and temperatures the strength of pearlitic grades of steel deteriorates, and they must be replaced with considerably more expensive austenitic steels. Although such a change permits operation at higher p_1 and T_1, resulting in a somewhat higher thermal efficiency of the cycle, investments increase. In other words, although fuel is saved, more expensive metals are consumed. Considering the problem from this viewpoint, a further increase in initial steam conditions is inexpedient, especially where cheap grades of fuel are available. This problem is solved on the basis of a comprehensive technical and economic analysis.

11.3 Rankine cycle analysis allowing for irreversible losses

Let us consider an actual Rankine cycle (one with irreversible losses). The purpose of this analysis is to find the component elements of a steam power plant in which the major irreversible losses occur and, with real examples, to estimate the order of magnitude of these irreversible losses.

For example, let us analyze the above Rankine cycle realized for the following initial steam conditions: $p_1 = 16\,670$ kPa (170 kgf/cm²), $T_1 = 550$ °C and $p_2 = 4.0$ kPa (0.04 kgf/cm²).

The actual cycle of a steam power plant will be analyzed with the aid of the three methods described in Chapter 9: efficiency, entropy calculation of power losses, and exergy analysis. First, let us investigate the irreversible losses in its real Rankine cycle, using the *method of efficiencies*.

In the first place we should mention the irreversible losses suffered as the steam flows through the turbine blading and nozzles, which are due to the inevitable friction in the boundary layer between the blades and steam and to other hydrodynamic phenomena.

As has already been mentioned, the process of adiabatic friction-resisted flow proceeds with an increase in entropy. The irreversible process of frictional adiabatic expansion was already shown on *i-s* and *T-s* diagrams in Fig. 8.12. When the steam at the turbine exhaust end is wet, the temperature at the end of expansion will be the same both in the reversible (T_2) and irreversible (T_{2r}) processes, since the process of expansion proceeds in both cases to the same pressure p_2, and in the two-phase region (wet steam) the isobar coincides with the isotherm. This can also be seen from Fig. 11.15 representing an actual process of steam expansion in a turbine on *i-s* and *T-s* diagrams.

If the process of steam expansion in the turbine were reversible (absence of frictional and other losses), the entire heat drop would have been converted into kinetic energy, and consequently into turbine work, and in this case: $l_{\text{turb}}^{\text{theor}} = i_1 - i_2$. But due to the presence of irreversible losses a smaller amount of work is produced by the turbine in the real process of steam expansion:

$$l_{\text{turb}}^{\text{real}} = i_1 - i_{2r}. \tag{11.11}$$

In accordance with Eq. 8.56, i_{2r} is always greater than i_2 and, consequently,

$$l_{\text{turb}}^{\text{real}} < l_{\text{turb}}^{\text{theor}}. \tag{11.12}$$

The difference $l_{\text{turb}}^{\text{theor}} - l_{\text{turb}}^{\text{real}} = i_{2r} - i_2 =$ area *1-2-2d-II-I* (Fig. 11.15).

In this case the internal relative efficiency of the steam turbine will be determined as follows:

$$\eta_{\text{i.r.}} = \frac{i_1 - i_{2r}}{i_1 - i_2}. \tag{11.13}$$

Fig. 11.15

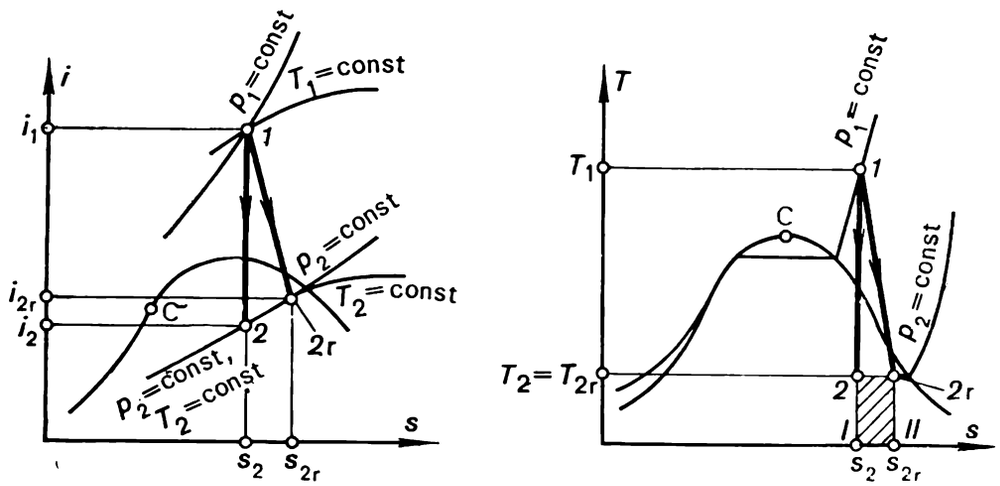

The internal relative efficiency of up-to-date high-power steam turbines, $\eta_{\text{i.r.}}^{\text{turb}}$ falls within 0.85 to 0.90.

By analogy, in accordance with Eq. (11.6) the work expended to drive the pump in the case of no irreversible losses is equal to:

$$l_{\text{pump}}^{\text{theor}} = i_5 - i_3,$$

and for the real process in the presence of irreversible losses

$$l_{\text{pump}}^{\text{real}} = i_{5r} - i_3;$$

the enthalpy i_{5r} is always greater than i_5 and, consequently,

$$l_{\text{pump}}^{\text{real}} > l_{\text{pump}}^{\text{theor}}.$$

In fact, as was mentioned in Sec. 9.3, the work transferred to the pump from an external source will always be larger in the presence of irreversible losses than the work which would be expended to compress the water in the absence of such losses.

The real adiabatic process, proceeding in a pump, is compared with a reversible process on the *i-s* and *T-s* diagrams shown in Fig. 11.16. In accordance with (9.13), the internal relative efficiency of the pump is determined in the following way:

$$\eta_{\text{i.r.}}^{\text{pump}} = \frac{i_5 - i_3}{i_{5r} - i_3}. \tag{11.14}$$

The value for $\eta_{\text{i.r.}}^{\text{pump}}$ usually falls within 0.85 to 0.90, i.e. it is approximately equal to the internal relative efficiency of the turbine, $\eta_{\text{i.r.}}^{\text{turb}}$.

Calculating the losses in the cycle of a steam power plant, due to the irreversibility of processes, the losses in the pump are usually ignored:

inasmuch as in the process *3-5* the enthalpy of water increases slightly compared with the heat drop through the turbine (process *1-2*), the increase in water entropy resulting from the irreversibility of the process of compression in the pump, $\Delta s^{\text{pump}} = s_{5r} - s_5$, is negligible compared with the increase in entropy due to irreversibility in the turbine, $\Delta s^{\text{turb}} = s_{2r} - s_2$, and in other components of the plant*.

As was shown above, the work performed in the reversible Rankine cycle in the absence of irreversible losses is determined from Eq. (11.7):

$$l_c^r = l_{\text{turb}}^{\text{theor}} - l_{\text{pump}}^{\text{theor}},$$

Fig. 11.16

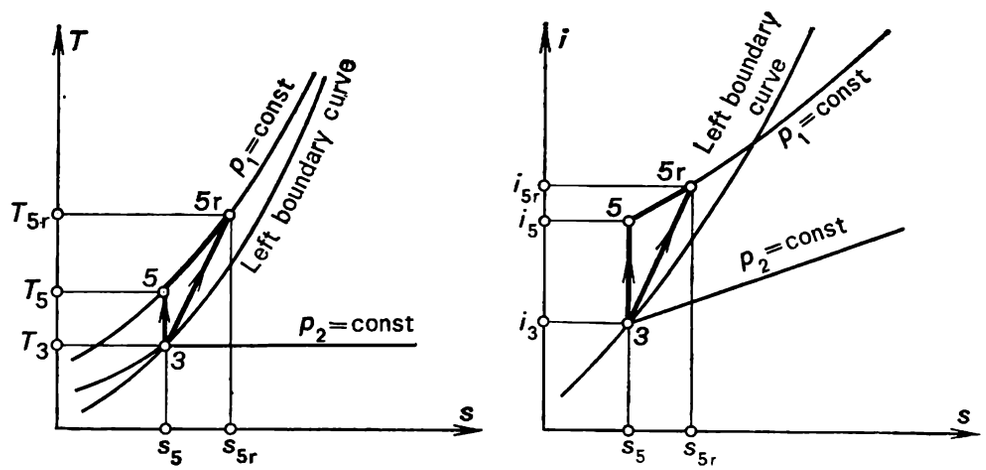

or, which is the same,

$$l_c^r = (i_1 - i_2) - (i_5 - i_3).$$

By analogy, the work done in the real Rankine cycle will be

$$l_c^{\text{real}} = l_{\text{turb}}^{\text{real}} - l_{\text{pump}}^{\text{real}}, \tag{11.15}$$

or, which is the same,

$$l_c^{\text{real}} = (i_1 - i_{2r}) - (i_{5r} - i_3). \tag{11.15a}$$

Thus, taking into account Eqs. (11.13) and (11.14), it follows that

$$l_c^{\text{real}} = (i_1 - i_2)\,\eta_{\text{i.r.}}^{\text{turb}} - \frac{i_5 - i_3}{\eta_{\text{i.r.}}^{\text{pump}}}. \tag{11.16}$$

Equation (11.16) yields the following expression for the internal relative efficiency of the turbine-pump set:

$$\eta_{\text{i.r.}}^{c} = \frac{l_c^{\text{real}}}{l_c^r} = \frac{(i_1 - i_2)\,\eta_{\text{i.r.}}^{\text{turb}} - \dfrac{i_5 - i_3}{\eta_{\text{i.r.}}^{\text{pump}}}}{(i_1 - i_2) - (i_5 - i_3)}. \tag{11.17}$$

As was shown in the preceding example, for the Rankine cycle with $p_1 = 16\,670$ kPa (170 kgf/cm²), $T_1 = 550$ °C and $p_2 = 4.0$ kPa (0.04 kgf/cm²), we have $i_1 = 3438$ kJ/kg (821.2 kcal/kg), $i_2 = 1945$ kJ/kg (464.5 kcal/kg), $i_3 = 120$ kJ/kg (28.7 kcal/kg), $i_5 = 137$ kJ/kg (32.7 kcal/kg) and, consequently, $(i_1 - i_2) = 1493$ kJ/kg (356.7 kcal/kg) and $(i_5 - i_3) = 17$ kJ/kg

* The estimates for Δs^{turb} and Δs^{pump} are given below.

(4.0 kcal/kg). Assuming $\eta_{i.r.}^{turb} = 0.85$ and $\eta_{i.r.}^{pump} = 0.90$, we find that Eqs. (11.13) and (11.14) give:

$$i_1 - i_{2r} = 1269 \text{ kJ/kg (303.2 kcal/kg)} \quad \text{and} \quad i_{2r} = 2169 \text{ kJ/kg (518 kcal/kg)},$$

$$i_{5r} - i_3 = 18 \text{ kJ/kg (4.4 kcal/kg)} \quad \text{and} \quad i_{5r} = 139 \text{ kJ/kg (33.1 kcal/kg)}.$$

Hence,

$$i_{2r} - i_2 = 224 \text{ kJ/kg (53.5 kcal/kg)} \quad \text{and} \quad i_{5r} - i_5 = 2 \text{ kJ/kg (0.4 kcal/kg)}.$$

The magnitude of $\eta_{i.r.}^{c}$ is calculated by Eq. (11.17):

$$\eta_{i.r.}^{c} = \frac{1269-18}{1493-17} = \frac{1251}{1476} = 0.85.$$

Thus, we are not surprised to find that the relative internal efficiency $\eta_{i.r.}^{c}$ is virtually equal to that of the turbine, $\eta_{i.r.}^{turb}$. As was already mentioned [see Eq. (9.18)], this can be traced to the small amount of work done by the pump compared with turbine work. Therefore, it will be considered below that

$$\eta_{i.r.}^{c} = \eta_{i.r.}^{turb}. \tag{11.18}$$

The internal absolute efficiency of the cycle is

$$\eta_i^c = \eta_{i.r.}^{c} \eta.$$

For this cycle turbine efficiency was shown in the preceding section to be 0.46, hence $\eta_i^c = 0.85 \times 0.46 = 0.39$, i.e. 39 % of the heat transferred to the working medium in the cycle is converted into work.

A fraction of that work is lost due to mechanical losses in various components of the turbine (friction in radial and thrust bearings). Also it is expended to drive the oil pump (delivering machine oil to turbine rubbing parts) and to actuate the turbine control system. The magnitude of these work expenditures is characterized by the *mechanical efficiency of the turbine*, η_m, which is the ratio of the mechanical work transferred by the turbine to the coupled electric generator (denote this work by l_{turb}^{m}) to the work done by the steam as it expands in the turbine (the already known quantity l_{turb}^{real}):

$$\eta_m = \frac{l_{turb}^{m}}{l_{turb}^{real}}. \tag{11.19}$$

If we now determine the absolute brake thermal efficiency of the turbine plant as

$$\eta_b^{turb} = \frac{l_{turb}^{m}}{q_1} \tag{11.20}$$

(the work done by the pump is ignored), it is clear form Eq. (11.20) that

$$\eta_b^{turb} = \frac{l_{turb}^{m}}{l_{turb}^{real}} \frac{l_{turb}^{real}}{q_1}. \tag{11.21}$$

Taking into account Eqs. (11.20) and (9.2), we find that

$$\eta_b^c = \eta_m \eta_i^c, \tag{11.22}$$

or, substituting the value of η_i^c from Eq. (9.4), we get:

$$\eta_b^{turb} = \eta_m \eta_{i.r.}^c \eta. \tag{11.23}$$

The mechanical efficiency of up-to-date high-power steam turbines falls within 0.97 to 0.995. Assuming that in our example the mechanical efficiency η_m is 0.97, we get from Eq.(11.22):

$$\eta_b^{turb} = 0.97 \times 0.39 = 0.38.$$

Thus, the work transferred to the electric generator is equivalent to 38% of the heat added to the working medium in the cycle.

The work l_{turb}^m is transferred to the coupling member on the shaft of the electric generator. A fraction of this work is spent to compensate for the electrical and mechanical losses occurring in the electric generator. We shall define the efficiency of the electric generator (η_g) by the ratio

$$\eta_g = l_p / l_{turb}^m, \tag{11.24}$$

where l_p is the work transferred to the external consumer (the electric power transmitted into the power system).

At the present time the efficiency of high-power generators ranges from 0.97 to 0.99. Let us introduce the concept of the *absolute electric efficiency of a turbogenerator set*:

$$\eta_{a.e.}^g = l_p / q_1. \tag{11.25}$$

Reducing the above expression to

$$\eta_{a.e.}^g = l_p / l_{turb}^m \times l_{turb}^m / q_1$$

and allowing for Eqs. (11.21) and (11.24), we obtain:

$$\eta_{a.e.}^g = \eta_g \eta_b^{turb}, \tag{11.26}$$

or, taking into account (11.23),

$$\eta_{a.e.}^g = \eta_g \eta_m \eta_{i.r.} \eta \tag{11.27}$$

(naturally, this efficiency does not account for the losses of heat in the boiler, steam mains, etc).

As applied to the above example, assuming the efficiency of the generator $\eta_g = 0.98$, we obtain from Eq. (11.26):

$$\eta_{a.e.}^g = 0.98 \times 0.38 = 0.37.$$

Thus, only 37% of the heat transferred to the working medium in the cycle is converted into electric power.

Inasmuch as our analysis ignored the work expended to drive the feed pump, the absolute electric efficiency of the plant, determined by the above relationship, does not allow for the work spent to drive the pump. If the efficiency is to be determined taking into account this work, then using Eq. (11.25), we find that the work spent to drive the pump, l_{pump}^{real}, should be subtracted from l_p.

When we speak of the amount of heat transferred to the working medium in the cycle, we mean the difference in enthalpies ($i_1 - i_5$), where i_1 is the enthalpy of the steam flowing into the turbine at a pressure p_1 and tempera-

ture T_1. However, it should be borne in mind that in the boiler steam is heated to a temperature exceeding T_1; the temperature of steam reduces somewhat as it moves along the steam main from the boiler to the turbine, due to the inevitable heat losses. Let us denote the temperature and enthalpy of the steam at the boiler's steam-outlet valve by T_1^0 and i_1^0, respectively. It is clear that the efficiency of the steam main, $\eta_{s.m.}$ can be determined in the following manner:

$$\eta_{s.m.} = \frac{i_1 - i_{5r}}{i_1^0 - i_{5r}}. \tag{11.28}$$

In modern steam power plants this efficiency usually falls within 0.98 to 0.99. The loss of heat between the turbine and condenser and from the feed line running from the condenser to the boiler is negligible and is ignored. In this example, $i_1 = 3438$ kJ/kg (821.2 kcal/kg) and $i_{5r} = 139$ kJ/kg (33.1 kcal/kg). Assuming $\eta_{s.m.} = 0.99$, we obtain from Eq. (11.28): $(i_1^0 - i_{5r}) = 3333$ kJ/kg (796.1 kcal/kg). Thus $i_1^0 = 3472$ kJ/kg (829.2 kcal/kg).

Not all the heat released upon fuel combustion in the boiler furnace is spent to heat feed water and the generated steam. A fraction of this heat is lost due to the inevitable losses in the boiler unit (heat lost with the products of combustion leaving the boiler, and due to incomplete chemical combustion, unconsumed carbon and radiation). It is clear that the degree of perfection of a boiler unit can be characterized by boiler efficiency $\eta_{b.u.}$, defined as*

$$\eta_{b.u.} = \frac{i_1^0 - i_{5r}}{q'}, \tag{11.29}$$

where $(i_1^0 - i_{5r})$ is the heat transferred in the boiler to feedwater and to the generated steam, and q' is the heat released upon fuel combustion in the furnace.

The efficiency of modern boiler units ranges from 0.89 to 0.93, depending on the kind of fuel fired: the small values of the efficiency are characteristic, for instance, of lignites (brown coal), and highest, of natural gas. Assuming a boiler unit efficiency of 0.91 in this example, we obtain from Eq. (11.29): $i_1^0 - i_{5r} = 3333$ kJ/kg (796.1 kcal/kg) and $q' = 3663$ kJ/kg (874.8 kcal/kg).

It follows from Eqs. (11.28) and (11.29) that

$$q' = \frac{i_1 - i_{5r}}{\eta_{s.m.}\eta_{b.u.}} \tag{11.30}$$

is the quantity of heat which should be obtained in the boiler by burning fuel so that the enthalpy of the working fluid at the boiler steam valve would amount to i_1^0.

The brake thermal efficiency of the entire heat power plant, η_b^p, must be defined as the ratio of the amount of work transferred to the external consumer (electric power transmitted into the power system), l_p, to the quantity of heat released upon fuel combustion in the boiler furnace, q':

$$\eta_b^p = \frac{l_p}{q'} \tag{11.31}$$

* Feed water enters the boiler with an enthalpy not equal to i_{5r} but somewhat inferior to it, due to the loss of heat in the feed line, running from the condenser ot the boiler. This loss is considered negligible.

This relationship can take the following form:

$$\eta_b^p = \frac{l_p}{q_1}\frac{q_1}{q'}.$$

Inasmuch as

$$q_1 = i_1 - i_5$$

(here and below i_{5r} is assumed to be smaller than i_5), taking into account Eqs. (11.25), (11.27) and (11.30), we obtain:

$$\eta_b^p = \eta_{b.u.}\eta_{s.m.}\eta_{a.e.}^{g}, \tag{11.32}$$

or, which is the same,

$$\eta_b^p = \eta_{b.u.}\eta_{s.m.}\eta_g\eta_m\eta_{i.r.}^c\eta. \tag{11.33}$$

This equation is a special case of Eq. (9.20) derived in Chapter 9. Assuming in this example that $\eta_{s.m.} = 0.99$ and $\eta_{b.u.} = 0.91$, we obtain with the aid of Eq. (11.32):

$$\eta_b^p = 0.91 \times 0.99 \times 0.37 = 0.33.$$

Thus, this heat power plant, operated on the Rankine cycle, converts 33% of the heat released upon fuel combustion in the boiler unit furnace into work transferred to an external consumer. In other words, of the amount of heat $q' = 3663$ kJ/kg (874.8 kcal/kg) released upon fuel combustion (per 1 kg of steam generated), 1207 kJ/kg (283.3 kcal/kg) is converted into electric power.

It will be recalled that in the above example the thermal efficiency of the reversible cycle is 0.46 (and the thermal efficiency of the reversible Carnot cycle, $\eta^{r.C.c.} = 0.63$). But due to the presence of irreversible losses the efficiency of the real heat power plant, operated on this cycle, reduces to $\eta_b^p = 0.33$ (i.e. by more than 26% in relation to η). Thus, rather great losses are suffered in actual heat power plants due to irreversibility.

Let us return to Eq. (11.25). Allowing for Eq. (11.2), we find that Eq. (11.25) yields:

$$l_p = \eta_{a.e.}^g (i_1 - i_5).$$

One kg of steam, whose enthalpy is i_1 at the turbine exit, does work l_p in the plant which is transferred to an external consumer.

But if D kg of steam flow into the turbine per hour, the amount of electric power generated per hour (or, in other words, the electric power of the generator) will be

$$N = (i_1 - i_5)\,\eta_{a.e.}^g D. \tag{11.34}$$

It follows from Eq. (11.30) that to generate 1 kg of steam at the necessary initial conditions, the following amount of heat should be released in the boiler furnace:

$$q' = \frac{i_1 - i_5}{\eta_{b.u.}\eta_{s.m.}}.$$

Correspondingly, to generate D kg of steam per hour, the following amount of heat should be released in the furnace:

$$Q' = \frac{(i_1 - i_5)\,D}{\eta_{b.u.}\eta_{s.m.}}. \tag{11.35}$$

If we denote the calorific, or heating, value of fuel (i.e. the amount of fuel released when 1 kg of fuel is burned) by Q_1*, then the quantity of fuel B which must be burned per hour in the boiler furnace to release heat Q' will be

$$B = \frac{Q'}{Q_1}. \tag{11.36}$$

Taking Eq. (11.35) into account, we find that the hourly consumption of fuel in the boiler of the steam power plant is

$$B = \frac{(i_1 - i_5) D}{Q_1 \eta_{\text{s.m.}} \eta_{\text{b.u.}}} \tag{11.37}$$

Replacing in Eq. (11.37) the product $(i_1 - i_5) D$ using Eq. (11.34), we obtain:

$$B = \frac{N}{Q_1 \eta^{g}_{\text{a.e.}} \eta_{\text{s.m.}} \eta_{\text{b.u.}}}, \tag{11.38}$$

or, allowing for Eq. (11.32),

$$B = \frac{N}{Q_1 \eta^{p}_{b}}. \tag{11.39}$$

This relationship gives the amount of fuel B required to ensure the generation of a given electric power (N) with the aid of a steam-turbine power plant operating with an efficiency η^{p}_{b}; the required fuel consumption will naturally depend on the calorific value of fuel, i.e. on its quality.

The electric power (capacity) of a heat power plant is usually expressed in killowatts (kW). If N is expressed in kW, and Q_1 in kJ/kg, then to determine the amount of fuel B in kg/h, relation (11.39) should be presented in the following form:

$$B = \frac{3600N}{Q_1 \eta^{p}_{b}}; \tag{11.39a}$$

but if N is expressed in kW and the calorific value Q_1 in kcal/kg, Eq. (11.39) takes the following form:

$$B = \frac{860N}{Q_1 \eta^{p}_{b}}, \tag{11.39b}$$

inasmuch as 1 kW $\cong$ 860 kcal/h. A more accurate value is given in Table 2.1.

In practice, the performance of an electric station is often estimated by the specific fuel consumption which is the quantity of fuel burned to generate 1 kW-h of electric power:

$$b = \frac{B}{N}. \tag{11.40}$$

The higher the efficiency of a thermopower plant, the smaller the specific fuel consumption.

Knowing the values of turbine efficiency and the efficiencies of all main component elements of the plant, we can determine the loss of heat in each of these elements.

---

* The quantity Q_1 is called the *lowest working calorific value of fuel*, reduced to the working mass of fuel and taking no account of the heat released upon condensation of water vapour (H_2O) in the combustion products.

The heat released upon fuel combustion, q', will be assumed as 100%. The losses of heat in the boiler will amount to

$$\Delta q_{\text{b.u.}} = (1 - \eta_{\text{b.u.}})\, q'. \tag{11.41}$$

In this example $\eta_{\text{b.u.}} = 0.91$. Consequently, the ratio $\Delta q_{\text{b.u.}}/q'$ amounts to 9%. The losses of heat in pipelines (steam mains) are

$$\Delta q_{\text{s.m.}} = (i_1^0 - i_1). \tag{11.42}$$

Allowing for Eq. (11.28), we obtain:

$$\Delta q_{\text{s.m.}} = (i_1^0 - i_5)(1 - \eta_{\text{s.m.}}); \tag{11.43}$$

inasmuch as

$$i_1^0 - i_5 = q'\eta_{\text{b.u.}}, \tag{11.44}$$

we have

$$\Delta q_{\text{s.m.}} = q'\eta_{\text{b.u.}}(1 - \eta_{\text{s.m.}}). \tag{11.45}$$

Here $\eta_{\text{s.m.}} = 0.99$ and $\Delta q_{\text{s.m.}}/q'\eta_{\text{b.u.}} = 1\,\%$. Consequently, as the boiler and pipeline losses amount to 10% of the quantity of heat released upon fuel combustion, the amount of heat $q_1 = i_1 - i_5 = q'\eta_{\text{s.m.}}\eta_{\text{b.u.}}$ constitutes 90% of q'.

Further, since in the general form the internal absolute efficiency of the cycle is expressed by the relationship

$$\eta_i^c = 1 - \frac{q_2^{\text{real}}}{q_1}, \tag{11.46}$$

the amount of heat q_2^{real} transferred to the low-temperature source during the cycle (i.e. the heat rejected in the condenser) is

$$q_2^{\text{real}} = (1 - \eta_i^c)\, q_1, \tag{11.47}$$

or, which is the same,

$$q_2^{\text{real}} = i_{2r} - i_3; \tag{11.48}$$

consequently,

$$q_2^{\text{real}}/q' = (1 - \eta_i^c)\, q_1/q'. \tag{11.49}$$

Thus, taking into account formulas (11.30) and (11.2), we get:

$$q_2^{\text{real}}/q' = (1 - \eta_i^c)\, \eta_{\text{s.m.}}\eta_{\text{b.u.}}. \tag{11.50}$$

In our example $\eta_i^c = 0.39$ and, consequently, $q_2^{\text{real}}/q' = 55\,\%$.

Therefore, the heat lost in the boiler and pipelines and transferred to the low-temperature source amounts to $9 + 1 + 55 = 65\%$ of the heat released in the boiler furnace upon fuel combustion. The remaining 35% of that heat is converted into turbine work. From the equation

$$\eta_i^c = \frac{l_c^{\text{real}}}{q_1}$$

we obtain:

$$l_c^{\text{real}} = \eta_i^c q_1, \tag{11.51}$$

or, which is the same,

$$l_c^{\text{real}} = \eta_i^c \eta_{\text{s.m.}}\eta_{\text{b.u.}} q'. \tag{11.52}$$

It is clear that the mechanical losses in the turbine amount to

$$\Delta q_m = (1 - \eta_m)\, l_c^{real}; \tag{11.53}$$

thus, taking Eq. (11.52) into account, we get:

$$\Delta q_m = (1 - \eta_m)\, l_i^c \eta_{s.m.} \eta_{b.u.} q'. \tag{11.54}$$

The mechanical efficiency was assumed $\eta_m = 0.97$; for this value of η_m it follows from Eq. (11.54) that $\Delta q_m/q' = 1\,\%$.

It follows from Eq. (11.19) that the mechanical work transferred to the turbine-generator shaft is

$$l_{turb}^m = l_{turb}^{real} \eta_m,$$

or, allowing for Eq. (11.52),

$$l_{turb}^m = \eta_i^c \eta_m \eta_{s.m.} \eta_{b.u.} q' \tag{11.55}$$

(in this example $l_{turb}^m/q' = 34\,\%$).

Finally, the electric and mechanical losses in the generator are

$$\Delta q_g = (1 - \eta_g)\, l_{turb}^m. \tag{11.56}$$

Substituting into this expression the value of l_{turb}^m from Eq. (11.55), we get:

$$\Delta q_g = q' (1 - \eta_g)\, \eta_i^c \eta_m \eta_{s.m.} \eta_{b.u.}. \tag{11.57}$$

Since in this example the efficiency of the generator is 0.98, we have $\Delta q_g/q' = 1\,\%$. The work transferred to the external consumer (into the network) is equal to

$$l_p = l_{turb}^m \eta_g. \tag{11.24a}$$

Thus, taking equation (11.55) into account, we get:

$$l_p = q' \eta_i^c \eta_g \eta_m \eta_{s.m.} \eta_{b.u.}, \tag{11.58}$$

or, which is the same,

$$l_p = q' \eta_b^p. \tag{11.31a}$$

Here $l_p/q' = \eta_b^p = 33\,\%$.

Thus, the heat balance of a thermopower plant with a turbine operating on the Rankine cycle is as follows:

$$q' = l_p + q_2^{real} + \Delta q_g + \Delta q_m + \Delta q_{s.m.} + \Delta q_{b.u.}. \tag{11.59}$$

The heat flows of this thermopower plant are illustrated in Fig. 11.17 and plotted in accordance with the results of the above analysis. This diagram, showing the sources of the main heat losses, illustrates well the ideas outlined in this section.

Let us analyze the same Rankine cycle with the aid of the *entropy calculation method of the availability loss.*

As has been shown in Sec. 9.4, the loss of availability of a system L_{sys} is equal to the sum of the losses L_j in each of the n elements of the system (plant) considered:

$$\Delta L_{sys} = \sum_{j=1}^{n} \Delta L_j.$$

It will be recalled that the loss of availability in an element of the system is determined by the relationship

$$\Delta L_j = T_0 \Delta s_j, \tag{11.60}$$

Fig. 11.17

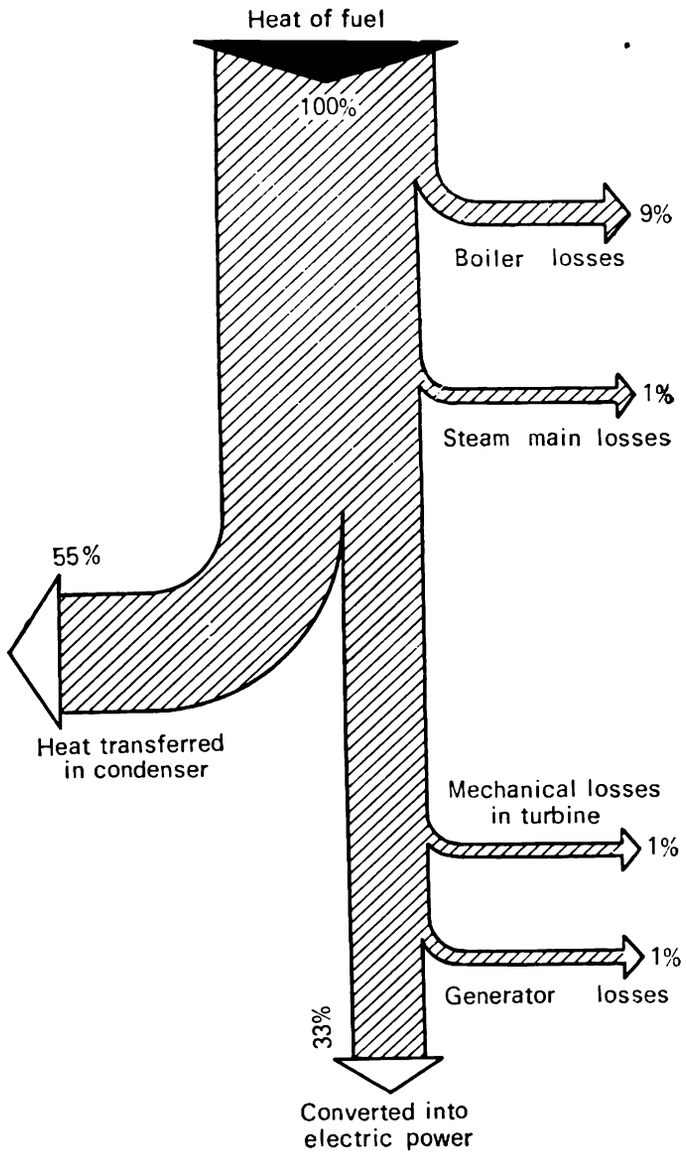

where T_0 is the temperature of surroundings, and Δs_j the increase in entropy in this system element due to the irreversible processes proceeding in it.

It should be emphasized that in Secs. 11.2 and 11.3 the brake thermal efficiency of the steam turbine plant was compared with the thermal efficiency of a "standard" cycle, i.e. of the reversible Carnot cycle, $\eta^{\text{r.c.c.}}$, realized in the same temperature interval as the Rankine cycle ($T_1 = 550$ °C, $T_2 = 28.6$ °C in this example). Strictly speaking, it is not quite right to compare this cycle with the Carnot cycle; here the high-temperature source is represented by the furnace gases at a temperature $T_{\text{h.t.}}$ equal to about 2000 °C, and the low-temperature source is the water used as a coolant in the condenser. The temperature of this water is equal to that of the surroundings, $T_{\text{l.t.}}$, and ranges from zero to 20 °C. Therefore, in principle, the effectiveness

of real cycles should be compared with the thermal efficiency of a reversible Carnot cycle realized for this temperature interval ($T_{h.t.}$ to $T_{l.t.}$). If the upper temperature of the Carnot cycle (550 °C in this example) is lower than that of the high-temperature source and the cycle's lower temperature is higher than that of the low-temperature source, such a Carnot cycle will be irreversible. However, since in actual steam power plants the upper temperature of the working medium is always far below the temperature in the

Fig. 11.18

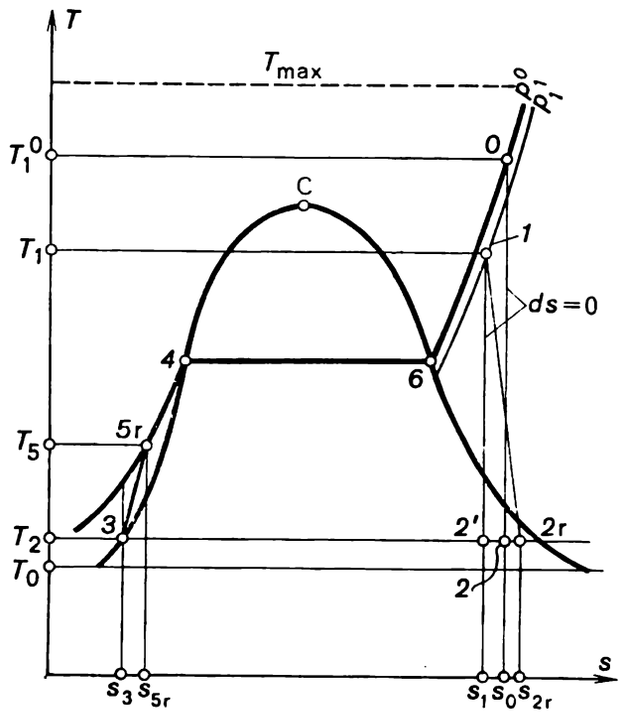

boiler furnace*, in practice real cycles are compared with reversible Carnot cycles, realized in the interval of temperatures characteristic of the working medium used in this real cycle. In other words, the real cycle is compared with a Carnot cycle which is reversible internally and irreversible externally (see Sec. 9.4). But from the position of the analysis of the availability of a system, as was shown in Sec. 9.4, the actual cycle should be compared with an externally reversible Carnot cycle.

Fig. 11.18 shows the real Rankine cycle on a *T-s* diagram**, in which *1-2*r represents the process of adiabatic steam expansion in the turbine, taking into account the irreversible frictional losses; *2*r-*3* is the isobaric-isothermal process of heat rejection in the condenser; *3-5*r the adiabatic process in the feed pump, taking into account the irreversible frictional losses; *5*r-*4-6-O* the isobaric process*** of heat addition to the cooling water (*5*r-*4*), vapour-

* In this connection, it will be recalled that in internal combustion engines the temperature of the working medium can be considered virtually equal to that of the high-temperature source (for the combustion products *are* the working medium).

** It will be emphasized again that this representation is hypothetical, since irreversible processes cannot be represented on a diagram of state.

*** Due to the inevitable hydraulic losses, the pressure of the working medium reduces somewhat as it flows through the flues; however, in an estimate this pressure drop can be ignored, assuming $p_1^0 = p_{5r}$.

water mixture (*4-6*) and to superheated steam (*6-O*) in the boiler; the curve *O-1* represents in an exaggerating way the drop in steam temperature from T_1^0 to T_1 and the pressure drop from p_1^0 to p_1, taking place on the way from the boiler to the turbine because of losses in the steam main. Because of those losses, when heat is rejected, the entropy of the working medium and the theoretical and actual work of the cycle diminish, as can be seen from Fig. 11.18.

The dotted isothermal line, shown on this diagram, corresponds to the temperatures of the high-temperature source (temperature in the furnace, $T_{max} = T_f$).

The temperature of the surroundings is assumed to be equal to the temperature of the cooling water, T_0. For this thermopower plant it is assumed that $T_f = 2000$ °C and $T_0 = 10$ °C.

Let us calculate the loss of availability in each component of the power plant, per kilogram of the working medium.

(i) ***Boiler unit.*** As before, the quantity of heat released upon fuel combustion in the boiler furnace is denoted by q'. The loss of availability in the boiler has two causes: first, a fraction of the heat q' is lost, and second, the heat realized in the boiler furnace upon fuel combustion is added to the working medium at a considerable difference between the temperature of the gases T_f and the working medium (it changes in the process of heat addition from T_{5r} to T_1^0).

The loss of availability due to the loss of heat is calculated in the following way. The magnitude of the heat loss is calculated from Eq. (11.41):

$$\Delta q_{b.u.} = (1 - \eta_{b.u.})\, q'.$$

On the basis of the considerations outlined in Sec. 3.6 it is clear that the increase in system entropy, due to the transfer of heat $\Delta q_{b.u.}$ from the furnace at a temperature T_f to the surroundings at a temperature T_0, will amount to

$$\Delta s^{I}_{b.u.} = \Delta q_{b.u.} \left(\frac{1}{T_0} - \frac{1}{T_f}\right). \tag{11.61}$$

It follows, in accordance with Eqs. (11.41) and (11.60), that the loss of system availability due to the irreversibility of the process will amount to

$$\Delta L^{I}_{b.u.} = (1 - \eta_{b.u.})\, q' \left(1 - \frac{T_0}{T_f}\right). \tag{11.62}$$

In this example,

$$\Delta L^{I}_{b.u.} = (1 - 0.91) \times 3663 \times \left(1 - \frac{10 + 273.15}{2000 + 273.15}\right) = 288 \text{ (kJ/kg) (68.9 kcal/kg)}.$$

Let us now determine the loss of system availability resulting from the irreversibility of the process in which the heat released in the furnace is added to the working medium.

The quantity of heat added to the working medium as it is being heated in the boiler is equal, according to equation (11.29), to

$$i_1^0 - i_{5r} = \eta_{b.u.} q'.$$

As this amount of heat is transferred to the working medium, the entropy of the high-temperature source (burning fuel) diminishes by

$$\Delta s_f = -\frac{\eta_{b.u.} q'}{T_f} \tag{11.63}$$

(as a first approximation the temperature in the boiler furnace, T_f, is assumed constant), and the entropy of the working medium will increase by

$$\Delta s_{w.m.} = s_1^0 - s_{5r} \tag{11.64}$$

(see Fig. 11.18). Inasmuch as in the process of heating the temperature of the working medium increases from T_{5r} to T_1^0, the change in the entropy of the working medium ($s_1^0 - s_{5r}$) cannot be calculated with the aid of relationships of the type

$$\Delta s = \frac{\Delta q}{T},$$

which is valid provided in the process of heat addition the temperature of the working medium remains constant. The quantity ($s_1^0 - s_{5r}$), however, can be determined with the aid of the Steam Tables, T-s or i-s diagrams plotted on the basis of known values of $p_1^0 = p_{5r}$, T_1^0 and T_{5r}.

The entire change in system entropy due to the irreversibility of the process of heat addition to the working medium will be

$$\Delta s_{b.u.}^{II} = (s_1^0 - s_{5r}) - \frac{\eta_{b.u.} q'}{T_f}, \tag{11.65}$$

and, accordingly, the loss of system availability during this process is

$$\Delta L_{b.u.}^{II} = T_0 q' \eta_{b.u.} \left(\frac{s_1^0 - s_{5r}}{i_1^0 - i_{5r}} - \frac{1}{T_f} \right). \tag{11.66}$$

For the example considered, let us find s_1^0 and s_{5r}, with the aid of Steam Tables. We find the magnitude of s_1^0 knowing the enthalpy of steam in this state $i_1^0 = 3472$ kJ/kg (829.2 kcal/kg) and steam pressure $p_1 = 16\,670$ kPa (170 kgf/cm²); from the Steam Tables we find that $s_1^0 = 6.5029$ kJ/(kg-K) = = 1.5532 kcal/(kg-K) (correspondingly, $T_1^0 = 562$ °C). Knowing i_{5r} = = 139 kJ/kg (33.1 kcal/kg), we find for the same pressure s_{5r} = = 0.4241 kJ/(kg-K) = 0.1013 kcal/(kg-K) [$T_{5r} = 29.5$ °C].

In accordance with Eq. (11.60), we obtain:

$$\Delta L_{b.u.}^{II} = (10 + 273.15) \times 3663 \times 0.91 \left(\frac{6.5029 - 0.4241}{3472 - 139} - \frac{1}{2000 + 273.15} \right) =$$
$$= 1305 \text{ kJ/kg (311.7 kcal/kg)}.$$

The entire loss of availability, due to the irreversibility of the processes developing in the boiler, is

$$\Delta L_{b.u.} = \Delta L_{b.u.}^{I} + \Delta L_{b.u.}^{II}. \tag{11.67}$$

For this cycle

$$\Delta L_{b.u.} = 288 + 1305 = 1593 \text{ kJ/kg (380.6 kcal/kg)}.$$

(ii) ***Steam main.*** In accordance with Eq. (11.45), the losses of heat in the steam main amount to

$$\Delta q_{s.m.} = (1 - \eta_{s.m.}) \eta_{b.u.} q' = i_1^0 - i_1.$$

Because of these heat losses, the temperature of the steam in the steam main drops from T_1^0 at the entrance to T_1 at the exit.

Inasmuch as the difference between T_1^0 and T_1 is not very great, it may be assumed that the temperature of the steam flowing through the steam main

is

$$T_1^{\text{mean}} = \frac{T_1^0 + T_1}{2}.$$

The increase in system entropy due to the transfer of heat in the steam main from the steam at a temperature T_1^{mean} to the surroundings at a temperature T_0 amounts to

$$\Delta s_{\text{s.m.}} = (i_1^0 - i_1)\left(\frac{1}{T_0} - \frac{1}{T_1^{\text{mean}}}\right). \tag{11.68}$$

It follows that the loss of system availability due to this process amounts to:

$$\Delta L_{\text{s.m.}} = (i_1^0 - i_1)\left(1 - \frac{T_0}{T_1^{\text{mean}}}\right). \tag{11.69}$$

In this example $T_1^0 = 562$ °C and $T_1 = 550$ °C. Consequently, $T_1^{\text{mean}} = 556$ °C, and from Eq. (11.69) it follows that

$$\Delta L_{\text{s.m.}} = 33\left(1 - \frac{10 + 273.15}{556 + 273.15}\right) = 22 \text{ kJ/kg (5.3 kcal/kg)}.$$

(iii) ***Turbine-generator unit.*** In the course of frictional adiabatic expansion of steam in a turbine entropy increases. Let us calculate the increase in steam entropy due to the irreversibility of the process of steam expansion in the turbine, $\Delta s_{\text{turb}} = s_{2\text{r}} - s_1$. In accordance with Eq. (8.69),

$$\int_2^{2\text{r}} T\,ds = i_{2\text{r}} - i_2.$$

If the exhaust steam (at the turbine exit) is wet (Fig. 11.18), then $T_2 = T_{2\text{r}}$ and Eq. (8.69) yields:

$$T_2(s_{2\text{r}} - s_2) = (i_{2\text{r}} - i_2). \tag{11.70}$$

It follows from Eq. (11.70) that

$$\Delta s_{\text{turb}} = \frac{i_{2\text{r}} - i_2}{T_2}. \tag{11.71}$$

Further, it is easy to obtain from Eq. (11.13) that

$$i_{2\text{r}} - i_2 = (1 - \eta_{\text{i.r.}}^{\text{turb}})(i_1 - i_2). \tag{11.72}$$

From the above relation, we get from Eq. (11.71):

$$\Delta s_{\text{turb}} = \frac{1 - \eta_{\text{i.r.}}^{\text{turb}}}{T_2}(i_1 - i_2), \tag{11.73}$$

or, which is the same,

$$\Delta s_{\text{turb}} = \frac{1 - \eta_{\text{i.r.}}^{\text{turb}}}{T_2}\, l_{\text{turb}}^{\text{theor}}. \tag{11.73a}$$

From this it follows that

$$\Delta L_{\text{turb}}^{\text{I}} = (1 - \eta_{\text{i.r.}}^{\text{turb}})\frac{T_0}{T_2}\, l_{\text{turb}}^{\text{theor}}. \tag{11.74}$$

As can be seen from Eqs. (11.72) and (11.74), the loss of work due to friction appearing as the steam flows through the turbine is greater than the

loss of availability $\Delta L^{\mathrm{I}}_{\mathrm{turb}}$. This is explained by the fact that the work lost on account of friction, equal to $i_{2r} - i_2$, turns into heat and is removed from the turbine at a temperature of $T_2 > T_0$. It is clear that, in principle, a fraction of that heat can again be converted into work in a cycle realized in the temperature interval from T_2 to T_0. But if $T_2 = T_0$, the loss of work is equal to the loss of availability.

In this cycle $l^{\mathrm{theor}}_{\mathrm{turb}} = i_1 - i_2 = 1493$ kJ/kg (356.7 kcal/kg), $\eta^{\mathrm{turb}}_{\mathrm{i.r.}} = 0.85$ and $T_2 = 28.6$ °C. Substituting these values into Eq. (11.74), we obtain:

$$\Delta L^{\mathrm{I}}_{\mathrm{turb}} = (1 - 0.85)\frac{10+273.15}{28.6+273.15}1493 = 210 \text{ kJ/kg } (50.2 \text{ kcal/kg}).$$

Account should also be taken of the losses of availability due to mechanical losses in the turbine and electrical losses in the electric generator (let us denote these losses by $\Delta L^{\mathrm{II}}_{\mathrm{turb}}$ and $\Delta L^{\mathrm{III}}_{\mathrm{turb}}$, respectively).

It follows from Eq. (11.19) that the mechanical losses in the turbine,

$$\Delta l_{\mathrm{m}} = l^{\mathrm{real}}_{\mathrm{turb}} - l^{\mathrm{m}}_{\mathrm{turb}}, \tag{11.75}$$

are determined in the following manner:

$$\Delta l_{\mathrm{m}} = l^{\mathrm{real}}_{\mathrm{turb}}(1 - \eta_{\mathrm{m}}). \tag{11.76}$$

Thus, taking Eqs. (11.11) into account, we get:

$$\Delta l_{\mathrm{m}} = (i_1 - i_{2r})(1 - \eta_{\mathrm{m}}), \tag{11.77}$$

or

$$\Delta l_{\mathrm{m}} = l^{\mathrm{theor}}_{\mathrm{turb}}\eta^{\mathrm{turb}}_{\mathrm{i.r.}}(1 - \eta_{\mathrm{m}}). \tag{11.78}$$

By analogy, the mechanical and electrical losses in the generator,

$$\Delta l_{\mathrm{g}} = l^{\mathrm{m}}_{\mathrm{turb}} - l_{\mathrm{p}}, \tag{11.79}$$

are determined in accordance with Eq. (11.56):

$$\Delta l_{\mathrm{g}} = (1 - \eta_{\mathrm{g}})\, l^{\mathrm{m}}_{\mathrm{turb}}.$$

Thus, taking into account Eqs. (11.11) and (11.19), we get:

$$\Delta l_{\mathrm{g}} = (1 - \eta_{\mathrm{g}})\,\eta_{\mathrm{m}}(i_1 - i_{2r}), \tag{11.80}$$

or

$$\Delta l_{\mathrm{g}} = l^{\mathrm{theor}}_{\mathrm{turb}}\eta^{\mathrm{turb}}_{\mathrm{i.r.}}(1 - \eta_{\mathrm{g}})\,\eta_{\mathrm{m}}. \tag{11.81}$$

The losses Δl_{m} and Δl_{g} are transferred in the form of heat to component elements of the turbine and generator. This heat is transferred at a constant temperature, since the plant is in steady-state operation. Assuming, as a first approximation, that this temperature is close to that of the surroundings, T_0, we find that the increase in system entropy, due to losses in the turbine and generator, can be determined from the formulas

$$\Delta s^{\mathrm{m}}_{\mathrm{sys}} = \frac{l^{\mathrm{theor}}_{\mathrm{turb}}}{T_0}\eta_{\mathrm{i.r.}}(1 - \eta_{\mathrm{m}}) \tag{11.82}$$

and

$$\Delta s^{\mathrm{g}}_{\mathrm{sys}} = \frac{l^{\mathrm{theor}}_{\mathrm{turb}}}{T_0}\eta_{\mathrm{i.r.}}\eta_{\mathrm{m}}(1 - \eta_{\mathrm{g}}). \tag{11.83}$$

Thus, for the quantities $\Delta L_{\text{turb}}^{\text{II}}$ and $\Delta L_{\text{turb}}^{\text{III}}$ we obtain:

$$\Delta L_{\text{turb}}^{\text{II}} = \Delta l_{\text{m}} = l_{\text{turb}}^{\text{theor}} \eta_{\text{i.r.}} (1 - \eta_{\text{m}}) \tag{11.84}$$

and

$$\Delta L_{\text{turb}}^{\text{III}} = \Delta l_{\text{g}} = l_{\text{turb}}^{\text{theor}} \eta_{\text{i.r.}} \eta_{\text{m}} (1 - \eta_{\text{g}}). \tag{11.85}$$

As was already mentioned, for $T_2 = T_0$ the loss of system availability is equal to the loss of work.

In this example $\eta_{\text{m}} = 0.97$, $\eta_{\text{g}} = 0.98$ and, consequently, $\Delta L_{\text{turb}}^{\text{II}} = 1493 \times 0.85\,(1 - 0.97) = 38$ kJ/kg (9.1 kcal/kg) and $\Delta L_{\text{turb}}^{\text{III}} = 1493 \times 0.85 \times 0.97\,(1 - 0.98) = 25$ kJ/kg (5.9 kcal/kg).

The total loss of availability traced to the irreversibility of the processes proceeding in the turbine-generator unit can be presented in the following manner:

$$\Delta L_{\text{turb}} = \Delta L_{\text{turb}}^{\text{I}} + \Delta L_{\text{turb}}^{\text{II}} + \Delta L_{\text{turb}}^{\text{III}}; \tag{11.86}$$

in this example

$$\Delta L_{\text{turb}} = 210 + 38 + 25 = 273 \text{ kJ/kg (65.2 kcal/kg)}.$$

(iv) ***Condenser.*** In accordance with Eq. (11.48), the heat removed from the steam undergoing an isobaric-isothermal process in the condenser amounts to

$$q_2^{\text{real}} = i_{2\text{r}} - i_3.$$

Assuming the rate of flow of cooling water through the condenser to be so high that its temperature T_0 remains practically constant in the condenser, we obtain:

$$\Delta s_{\text{cond}} = (i_{2\text{r}} - i_3)(1/T_0 - 1/T_2) \tag{11.87}$$

and, accordingly,

$$\Delta l_{\text{cond}} = (i_{2\text{r}} - i_3)\left(1 - \frac{T_0}{T_2}\right). \tag{11.88}$$

In our example $i_{2\text{r}} = 2169$ kJ/kg (518.0 kcal/kg), $i_3 = 120$ kJ/kg (28.7 kcal/kg) and

$$\Delta L_{\text{cond}} = (2169 - 120)\left(1 - \frac{10 + 273.15}{28.6 + 273.15}\right) = 126 \text{ kJ/kg (30.2 kcal/kg)}.$$

(v) ***Feed pump.*** The increase in entropy due to the irreversibility of the adiabatic process in the feed pump is calculated in the following way. From Eq. (11.14),

$$\eta_{\text{i.r.}}^{\text{pump}} = \frac{i_5 - i_3}{i_{5\text{r}} - i_3},$$

we find that the supplementary increase in entropy because of the heat released due to friction $(i_{5\text{r}} - i_5)$ amounts to

$$i_{5\text{r}} - i_5 = \left(\frac{1}{\eta_{\text{i.r.}}^{\text{pump}}} - 1\right)(i_5 - i_3). \tag{11.89}$$

Since the temperatures $T_{5\text{r}}$ and T_5 (Fig. 11.16) differ little from each other (in this example $T_5 = 29.0$ °C and $T_{5\text{r}} = 29.5$ °C*), we can write

$$i_{5\text{r}} - i_5 = (s_{5\text{r}} - s_5)\, T_5^{\text{mean}}, \tag{11.90}$$

* The magnitude of $T_{5\text{r}}$ is found from the Steam Tables, on the basis of knowing $p_1 = 170$ kgf/cm² and $i_{5\text{r}} = 33.1$ kcal/kg.

where

$$T_5^{\text{mean}} = \frac{1}{2}(T_5 + T_{5r}).$$

It follows from Eq. (11.90) that the increase in the entropy of water in the pump, $\Delta s_{\text{pump}} = s_{5r} - s_5$, amounts to

$$\Delta s_{\text{pump}} = \frac{i_{5r} - i_5}{T_5^{\text{mean}}}. \tag{11.91}$$

Thus, taking Eq. (11.89) into account, we get:

$$\Delta s_{\text{pump}} = \left(\frac{1}{\eta_{\text{i.r.}}^{\text{pump}}} - 1\right)\left(\frac{i_5 - i_3}{T_5^{\text{mean}}}\right), \tag{11.92}$$

or, which is the same,

$$\Delta s_{\text{pump}} = \left(\frac{1}{\eta_{\text{i.r.}}^{\text{pump}}} - 1\right)\frac{l_{\text{pump}}^{\text{theor}}}{T_5^{\text{mean}}}, \tag{11.92a}$$

where $l_{\text{pump}}^{\text{theor}} = i_5 - i_3$ is the theoretical work of the pump.

It follows that

$$\Delta L_{\text{pump}} = \left(\frac{1}{\eta_{\text{i.r.}}^{\text{pump}}} - 1\right) l_{\text{pump}}^{\text{theor}} \frac{T_0}{T_5^{\text{mean}}}. \tag{11.93}$$

In this example $T_5^{\text{mean}} = 29.2$ °C, and so

$$\Delta L_{\text{pump}} = (1/0.90 - 1) \times 17 \frac{10 + 273.15}{29.2 + 273.15} = 1.7 \text{ kJ/kg } (0.4 \text{ kcal/kg})$$

The values of the losses of availability (power losses) in individual elements of this cycle are given in Table 11.1.

Table 11.1 Losses of availability in a steam power plant

Plant elements	Reasons for loss	Availability loss ΔL		Availability loss factor η_{av} (%)
		kJ/kg	kcal/kg	
Boiler unit	Boiler heat losses	288	68.9	8.9
	Irreversible heat exchange	1305	311.7	40.5
Steam main	Heat losses	22	5.3	0.7
Turbine-generator	Irreversible process of steam expansion in turbine	210	50.2	6.5
	Mechanical losses in turbine	38	9.1	1.2
	Mechanical and electrical losses in generator	25	5.9	0.8
Condenser	Irreversible heat exchange	126	30.2	3.9
Pump	Irreversibility of process	≅2	0.4	0.1
Total		2016	481.7	62.6

The total loss of availability for the entire cycle realized in the plant,

$$\Delta L_p = \Delta L_{b.u.} + \Delta L_{s.m.} + \Delta L_{turb} + \Delta L_{cond} + \Delta L_{pump}, \qquad (11.94)$$

amounts to 2016 kJ/kg (481.7 kcal/kg).

The maximum work which could be obtained from the heat q' involved in the system "high-temperature source—working medium—low-temperature source" represents, as has been already noted in Sec. 9.4, the work of the reversible Carnot cycle realized in the temperature interval between T_f and T_0.

Since heat q' is added to the plant, in accordance with Eq. (9.26), we have

$$l_{use}^{max} = q'\eta^{r.C.c.},$$

where

$$\eta^{r.C.c.} = \frac{T_f - T_0}{T_f}.$$

In our example

$$\eta^{r.C.c.} = \frac{(2000+273.15)-(10+273.15)}{2000+273.15} = 0.88,$$

and since $q' = 3663$ kJ/kg (874.8 kcal/kg), we have:

$$l_{use}^{max} = 3663 \times 0.88 = 3224 \text{ kJ/kg (770.0 kcal/kg)}.$$

From Eq. (9.33),

$$l_{use} = l_{use}^{max} - \Delta L,$$

it follows that in this example the work transferred from the steam power plant (denoted by l_p) is

$$l_p = 3224 - 2016 = 1208 \text{ kJ/kg (288.3 kcal/kg)}.$$

This result coincides, of course, with the quantity l_p determined previously with the aid of the method of thermal efficiencies (page 401).

In this example, the *availability loss factor*, determined from Eq. (9.35), is

$$\eta_{av} = \frac{\Delta L}{l_{use}^{max}}$$

and amounts to

$$\eta_{av} = \frac{2016}{3224} = 0.626 \cong 0.63,$$

and the *relative availability factor* (or the *degree of thermodynamic perfection*) for the plant,

$$\eta_{r.av.} = 1 - \eta_{av},$$

is equal to $1-0.63 = 0.37$.

Taking these values into account, let us calculate the brake thermal efficiency of the given steam power plant, η_b^p. In accordance with Eq. (9.50),

$$\eta_b^p = \eta_{r.av.}\eta^{r.C.c.},$$

we obtain:

$$\eta_b^p = 0.37 \times 0.88 = 0.33,$$

which, as could be expected, coincides with the result obtained by the method of efficiencies from Eq. (11.33).

Analyzing the loss of availability in individual elements of the steam power plant, we find that the greatest availability losses (1593 kJ/kg = = 380.6 kcal/kg) occur in the boiler unit, where irreversibility is the highest due to the large difference between the temperature of the furnace gases and that of the working fluid. [The losses of availability traced only to this difference, i.e. due to the insufficient utilization of the temperature potential of the heat released upon fuel combustion, amount to $\Delta L^{\Pi}_{\text{b.u.}} = 1305$ kJ/kg (3.117 kcal/kg).]

To decrease the availability loss $\Delta L^{\Pi}_{\text{b.u.}}$, it is first necessary to decrease the degree of irreversibility involved in the process of heat exchange in the boiler. It is clear that important results can be obtained by diminishing the difference between the temperatures of the products of combustion and of the working medium. In turn, this temperature difference can be diminished either by reducing the temperature of the products of combustion in the furnace or by increasing the mean temperature of the working medium in the process of heat addition. It can be easily shown that the first method fails to give the desired result: with a decrease in combustion temperature in the boiler furnace the loss of availability actually decreases. However, a decrease in combustion temperature involves a drop in system availability $l^{\max}_{\text{use}}$ by exactly the same value [see Eq. (9.27)].

Therefore it is clear that the availability losses of a system can be diminished only by increasing the temperature of the working medium. However, as was already mentioned, although this is thermodynamically expedient, it involves an increased cost in plant construction, which cannot be justified economically.

Considerable losses of availability take place in the turbine-generator set [they can be reduced by improving the design of the blading (nozzles and blades) and of the mechanical elements of the turbine, and by improving the generator] and in the condenser. The loss of availability in the condenser can be reduced by increasing the difference between the temperature of the condensing steam and that of the cooling water by a further lowering of condenser pressure p_2. However, it ought to be borne in mind that as was already mentioned this will call for larger condenser heat-transfer surfaces and, consequently, will involve greater expenditures in constructing the steam power plant, which are usually unjustified and cannot always be ensured with existing water-supply facilities.

The losses in the steam main are comparatively small; a further reduction involves an improvement of heat insulation and of the hydrodynamic characteristics of the pipeline.

The losses in the pump are negligible.

Let us now analyze the losses of availability in the components of the steam power plant, applying the *exergy method.*

It will be recalled that, as has been shown in Chapter 9, the exergy e of a flow of the working medium is determined by Eq. (9.56b),

$$e = (i - i_0) - T_0 (s - s_0),$$

and the exergy e_q of a heat flow q, by (9.60),

$$e_q = q \left(1 - \frac{T_0}{T}\right),$$

with the availability loss of the working medium flowing through the heat apparatus, to which heat q is added simultaneously, being equal [according to Eq. (9.61)] to

$$\Delta L = [(e_{\text{in}} + e_{q\,\text{in}}) - e_{\text{out}}] - l_{\text{use}},$$

where l_{use} is the work performed by this apparatus and transferred to the external consumer. Let us apply this relationship to each of the components of the steam power plant.

(i) ***Boiler unit.*** The water entering the boiler has a temperature T_{5r} at pressure p_1; the exergy of the water is

$$e_{\text{in}}^{\text{b.u.}} = (i_{5r} - i_0) - T_0(s_{5r} - s_0). \tag{11.95}$$

The boiler unit also receives heat q' from a high-temperature source (burning fuel) which is at a temperature T_f; the exergy of this heat flow is

$$e_{q\,\text{in}}^{\text{b.u.}} = q'\left(1 - \frac{T_0}{T_f}\right). \tag{11.96}$$

The generated steam leaves the boiler at a temperature T_1^0 and a pressure p_1; its exergy is

$$e_{\text{out}}^{\text{b.u.}} = (i_1^0 - i_0) - T_0(s_1^0 - s_0). \tag{11.97}$$

Inasmuch as no useful work is done in the boiler, in accordance with Eq. (9.62) we have:

$$\Delta L^{\text{b.u.}} = (e_{\text{in}}^{\text{b.u.}} + e_{q\,\text{in}}^{\text{b.u.}}) - e_{\text{out}}^{\text{b.u.}}. \tag{11.98}$$

While examining the Rankine cycle, it was assumed that $p_0 = 98$ kPa (1 kgf/cm^2) and $T_0 = 10\,°\text{C} = 283.15$ K. At these steam conditions the enthalpy and entropy of water are, respectively, $i_0 = 42$ kJ/kg (10.1 kcal/kg) and $s_0 = 0.1511$ kJ/(kg-K) [0.0361 kcal/(kg-K)].

We find with the aid of Steam Tables the value of s_{5r} for the boiler unit of this power plant: $s_{5r} = 0.4241$ kJ/kg [0.1013 kcal/(kg-K)], we find from Eqs. (11.95) to (11.97) that

$$e_{\text{in}}^{\text{b.u.}} = (139 - 42) - 283.15\,(0.4241 - 0.1511) = 19 \text{ kJ/kg (4.5. kcal/kg)},$$

$$e_{q\,\text{in}}^{\text{b.u.}} = 3663\left(1 - \frac{10 + 273.15}{2000 + 273.15}\right) = 3206 \text{ kJ/kg (765.8 kcal/kg)},$$

$$e_{\text{out}}^{\text{b.u.}} = (3472 - 42) - 283.15\,(6.5029 - 0.1511) = 1631 \text{ kJ/kg (389.5 kcal/kg)}.$$

Allowing for these values, we obtain from Eq. (11.98) the magnitude of the loss of availability in the boiler unit:

$$\Delta L^{\text{b.u.}} = 3206 + 19 - 1631 = 1594 \text{ kJ/kg (380.8 kcal/kg)}.$$

(ii) ***Steam main.*** Steam enters the steam main with conditions p_1^0 and T_1^0 and leaves it with conditions $p_1 T_1$. It is clear that the exergy of steam at the steam-main entry is equal to the exergy of steam at the boiler exit, or steam value:

$$e_{\text{in}}^{\text{s.m.}} = e_{\text{out}}^{\text{b.u.}},$$

and the exergy of steam at the steam-main exit is

$$e_{\text{out}}^{\text{s.m.}} = (i_1 - i_0) - T_0(s_1 - s_0). \tag{11.99}$$

The loss of steam availability in the steam main (the steam does no useful work in the pipeline) amounts to

$$\Delta L^{\text{s.m.}} = e_{\text{in}}^{\text{s.m.}} - e_{\text{out}}^{\text{s.m.}}. \tag{11.100}$$

In this example $e_{\text{in}}^{\text{s.m.}} = e_{\text{out}}^{\text{b.u.}} = 1631$ kJ/kg (389.5 kcal/kg) and $e_{\text{out}}^{\text{s.m.}} = (3438-42) - 283.15\ (6.4619-0.1511) = 1609$ kJ/kg (384.3 kcal/kg); the entropy of steam, $s = 6.4619$ kcal/kg-K $= 1.5434$ kcal/(kg-K), is found from Steam Tables. The loss of availability due to heat losses in the steam main is equal to

$$\Delta L^{\text{s.m.}} = 1631 - 1609 = 22 \text{ kJ/kg (5.3 kcal/kg)}.$$

(iii) ***Turbine-generator unit.*** The conditions of the steam supplied to the turbine are p_1 and T_1, and the parameters of the exhaust steam (at the turbine exit) are p_2 and T_{2r}. Accordingly,

$$e_{\text{in}}^{\text{turb}} = e_{\text{out}}^{\text{s.m.}}$$

and

$$e_{\text{out}}^{\text{turb}} = (i_{2r} - i_0) - T_0 (s_{2r} - s_0). \tag{11.101}$$

Inasmuch as the turbine-generator unit produces useful work

$$l_{\text{use}} = l_{\text{p}},$$

in accordance with Eq. (9.57), the loss of availability in the turbine-generator unit amounts to

$$\Delta L^{\text{turb}} = (e_{\text{in}}^{\text{turb}} - e_{\text{out}}^{\text{turb}}) - l_{\text{p}}. \tag{11.102}$$

This quantity accounts for the availability losses due to both the irreversible nature of steam flow through the turbine blading and to frictional losses in the turbine mechanism, and also due to mechanical and electrical losses in the generator.

For this steam power plant

$$e_{\text{in}}^{\text{turb}} = e_{\text{out}}^{\text{s.m.}} = 1609 \text{ kJ/kg (384.3 kcal/kg)}$$

and

$$e_{\text{out}}^{\text{turb}} = (2169 - 42) - 283.15\ (7.2063 - 0.1511) = 129 \text{ kJ/kg (30.8 kcal/kg)};$$

the entropy of exhaust steam at the turbine exit, $s_{2r} = 7.2063$ kJ/(kg-K) $= 1.7212$ kcal/(kg-K), is found from Steam Tables. Taking into account that $l_{\text{p}} = 1207$ kJ/kg (283.8 kcal/kg), we find from Eq. (11.102) that

$$\Delta L^{\text{turb}} = (1609 - 129) - 1207 = 273 \text{ kJ/kg (65.2 kcal/kg)}.$$

(iv) ***Condenser.*** The exergy of steam flowing from the turbine into the condenser (of the exhaust steam) is

$$e_{\text{in}}^{\text{cond}} = e_{\text{out}}^{\text{turb}},$$

and the exergy of the condensate leaving the condenser is

$$e_{\text{out}}^{\text{cond}} = (i_3 - i_0) - T_0 (s_3 - s_0). \tag{11.103}$$

Inasmuch as no useful work is done in the condenser, the availability loss of the flow in the condenser is

$$\Delta L^{\text{cond}} = e_{\text{in}}^{\text{cond}} - e_{\text{out}}^{\text{cond}}. \tag{11.104}$$

Here $e_{in}^{cond} = e_{out}^{turb} = 129$ kJ/kg (30.8 kcal/kg) and

$$e_{out}^{cond} = (120-42) - 283.15\,(0.4178-0.1511) = 3 \text{ kJ/kg } (0.6 \text{ kcal/kg})$$

(the entropy of water in the state of saturation, $s_3 = s' = 0.4178$ kJ/kg = = 0.0998 kcal/kg is taken from Steam Tables).

The loss of steam availability in the condenser is

$$\Delta L^{cond} = 129 - 3 = 126 \text{ kJ/kg } (30.2 \text{ kcal/kg}).$$

(v) ***Feed pump.*** The exergy of water entering the pump is

$$e_{in}^{pump} = e_{out}^{cond},$$

and the exergy of water at the pump discharge connection is

$$e_{out}^{pump} = e_{in}^{b.u.}.$$

To drive the pump work is transferred from an external source, equal to

$$l_{pump} = i_{5r} - i_3;$$

inasmuch as this work is expended ultimately to increase the enthalpy of feedwater, the amount of work transferred is equivalent to addition of heat. The exergy of this heat, introduced into the pump,

$$e_{q\,in}^{pump} = (i_{5r} - i_3)\left(1 - \frac{T_0}{T_5^m}\right). \tag{11.105}$$

In accordance with Eq. (9.61), the loss of water availability in the feed pump amounts to

$$\Delta L^{pump} = e_{in}^{pump} - e_{out}^{pump} + l_{pump}, \tag{11.106}$$

where l_{pump} is the work transferred to the pump from the outside (negative work).

In this example $e_{in}^{pump} = e_{out}^{con} = 2.5$ kJ/kg (0.6 kcal/kg), $e_{out}^{pump} = e_{in}^{b.u.} =$ = 18.8 kJ/kg (4.5 kcal/kg), $l_{pump} = 18.4$ kJ/kg (4.4 kcal/kg), and

$$e_{q\,in}^{pump} = 17.6\left(1 - \frac{10+273.15}{29.2+273.15}\right) = 1.3 \text{ kJ/kg } (0.3 \text{ kcal/kg}).$$

Consequently,

$$\Delta L^{pump} = 2.5 - 18.8 + 18.4 = 2.1 \text{ kJ/kg } (0.5 \text{ kcal/kg}).$$

As can be seen from the results of this analysis, the values of the losses of availability in each element of the plant found by the exergy method coincide, as was to be expected, within the accuracy of the calculation (equal to 0.1 kcal/kg), with the values determined by the entropy method.

The diagram of the flows of exergy for this steam power plant is shown in Fig. 11.19. To a certain extent this diagram resembles, although externally, the diagram of the flows of heat (Fig. 11.17). The exergy of the heat released upon combustion of fuel in the boiler furnace is assumed to be 100%; the diagram shows what fraction of the heat flow is spent as the loss of availability in each particular element of the power plant. It should be emphasized that, as can be seen from the diagram, a fraction (although negligible) of the

flow of the exergy returns into the cycle, i.e. the exergy of feed water entering the feed pump. The diagram of the flows of exergy is an illustration of the above calculations.

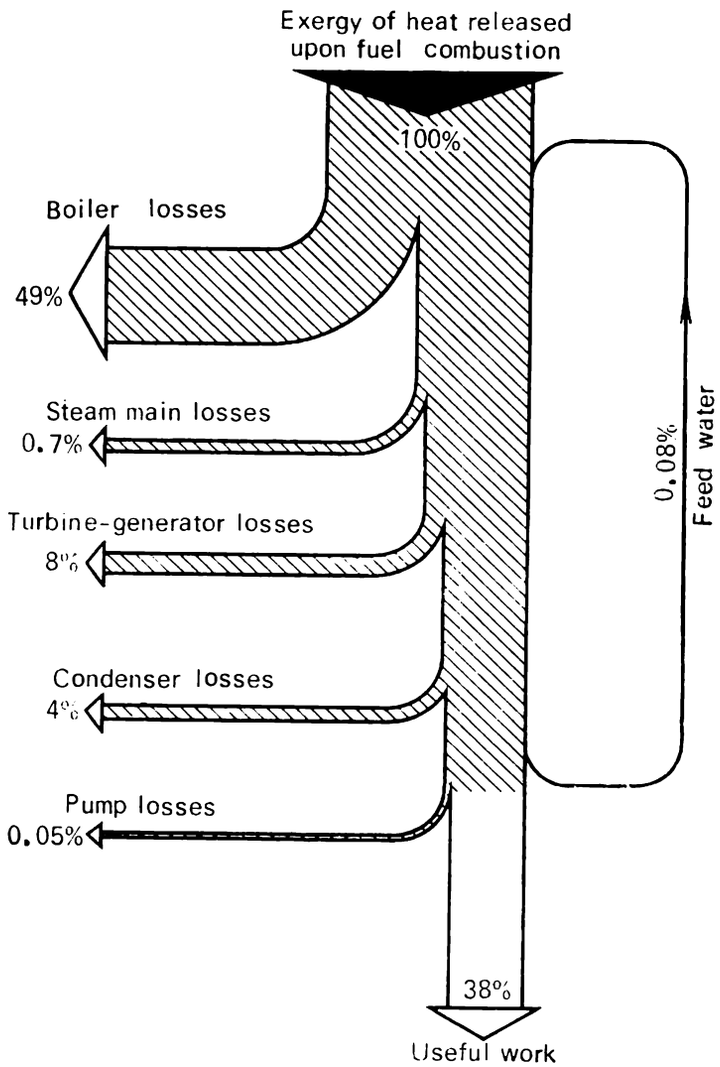

Fig. 11.19

The methods of analysis of real steam power cycles described above are also applicable to more intricate cycles considered below. We shall restrict ourselves to an analysis of internally reversible cycles realized in these plants, taking irreversibility into account.

11.4 Reheat cycle

As has been already mentioned in Secs. 11.1 and 11.2, if very wet steam flows through a turbine, the hydrodynamic conditions for the turbine blades and nozzles deteriorate sharply, causing a reduction of the internal relative efficiency of the turbine, $\eta_{i.r.}$; this in turn leads to a reduction of the effective (thermal) efficiency of the power plant as a whole. For modern turbines the admissible dryness fraction of exhaust steam (at the turbine exit) should be not less than $x = 0.86$ to 0.88.

As has already been mentioned, one of the ways to reduce the wetness of exhaust steam at the turbine exit is to superheat the steam in the boiler. Superheating leads to an increase in the thermal efficiency of the cycle realized, and at the same time, on the *T-s* diagram it shifts the point corresponding to the conditions of exhaust steam to the right, into the region of greater dryness fractions, as illustrated in Fig. 11.20*a*.

We have also found that with the same superheat temperature the use of high pressures increases the cycle areas ratio and, consequently, the thermal efficiency of the cycle, but simultaneously a higher pressure diminishes the dryness fraction of the exhaust steam and the internal relative efficiency of the turbine.

One solution could be to further increase the superheat temperature (the dotted line in Fig. 11.20*b*). However, as was already mentioned, further

Fig. 11.20

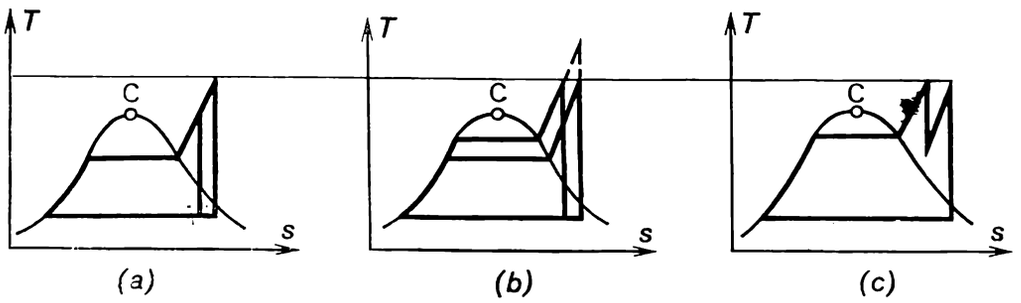

temperature increases are restricted by the properties of construction materials. The economic advantage of this undertaking should also take into consideration increased investments involved in building such a plant.

One way to reduce the final wetness of exhaust steam is to reheat the steam. After the flow of steam, performing work in the turbine, expands to some pressure $p^* > p_2$, it is extracted from the turbine and directed to flow into an additional superheater, or reheater, installed, for instance, in the boiler flue. In this reheater, steam temperature rises to T^*, and then the steam flows back into the turbine, in which it expands to the pressure p_2. As can be seen from the *T-s* diagram, shown in Fig. 11.20*c*, the final wetness of steam diminishes.

The diagram of a power plant with steam reheating is shown in Fig. 11.21, in which the reheat superheater, or reheater, is designated by RS. When reheating the steam, the turbine is a two-cylinder unit, comprising a high-pressure turbine and a low-pressure turbine* arranged on a common shaft along with a generator.

Figure 11.22 shows on a *T-s* diagram an internally reversible reheat cycle of the steam power plant, practising superheating. It is clear that this cycle can be visualized as consisting of two individual cycles, the conventional Rankine cycle (main) *5-4-6-1-2-3-5* and an additional cycle *2-7-8-9-2* (the line *7-8* is an isobar p^* = const). It can be assumed that the work done along the section *7-2* of the expansion adiabat in the main cycle is spent to ensure adiabatic compression of the working medium on the section *2-7* of the additional cycle.

* The internal relative efficiency of the high-pressure cylinder of the turbine is greater than that of the low-pressure cylinder.

The expression for the thermal efficiency of the reheat cycle can be presented in the following form:

$$\eta^{\text{r.c.}} = \frac{(i_1 - i_7) + (i_8 - i_9) - (i_5 - i_3)}{(i_1 - i_5) + (i_8 - i_7)}. \tag{11.107}$$

Fig. 11.21

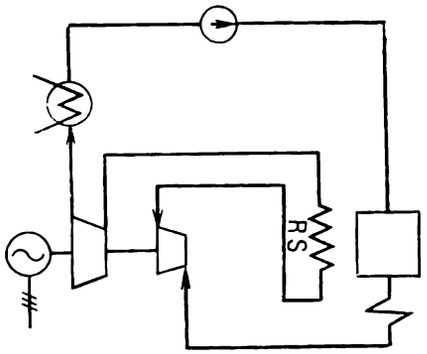

Fig. 11.22

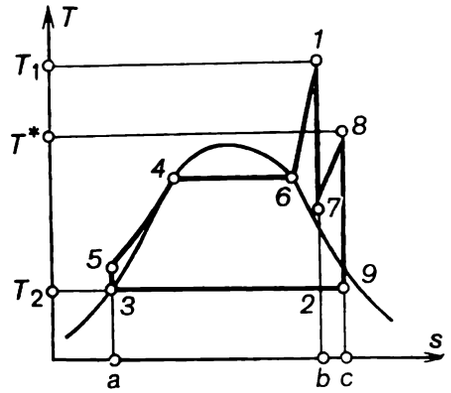

Fig. 11.23

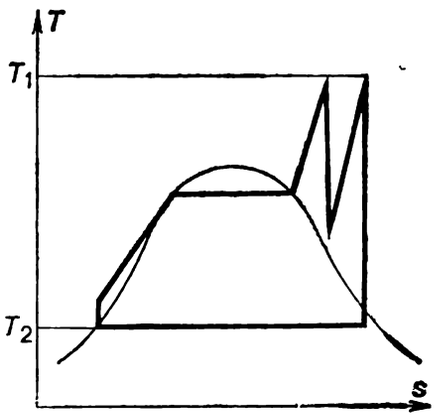

Fig. 11.24

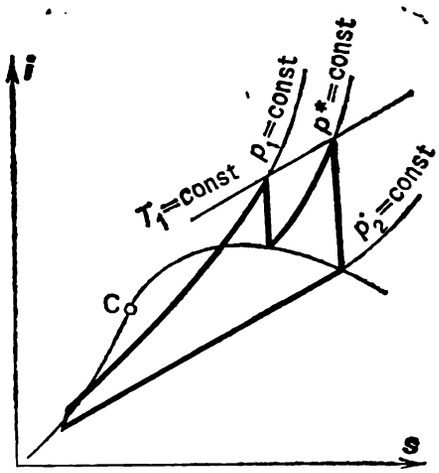

If the thermal efficiency of the additional cycle,

$$\eta^{\text{ad}} = \frac{(i_8 - i_9) - (i_7 - i_2)}{i_8 - i_7}, \tag{11.108}$$

is greater than the thermal efficiency of the main cycle,

$$\eta^{\text{main}} = \frac{(i_1 - i_2) - (i_5 - i_3)}{i_1 - i_5}, \tag{11.109}$$

then the thermal efficiency of the reheat cycle, $\eta^{\text{r.c.}}$, will be greater than the thermal efficiency of a Rankine cycle without reheating (i.e. greater than that of the main cycle):

$$\eta^{\text{r.c.}} > \eta^{\text{main}}.$$

In fact, if $\eta^{\text{ad}} > \eta^{\text{main}}$, it means that the area ratio of the additional cycle is greater than that of the main cycle and, consequently, the area ratio of the total reheat cycle is larger than the area ratio of the main cycle.

Steam reheating, practised at one time mainly to do away with the high wetness of steam in the last stages of turbines, is now used to increase the

thermal efficiency cycles. Analyzing the T-s diagram, we see that if steam is returned for reheating at a temperature not very low and it is being reheated to a temperature close to T_1, the thermal efficiency of the additional cycle will be higher than the thermal efficiency of the main cycle; in this case the area ratio of the additional cycle will be far greater than that of the main cycle (Fig. 11.23).

A cycle with steam reheating to a temperature $T^* = T_1$ is shown on the i-s diagram in Fig. 11.24.

Modern steam power plants are usually operated not only with single but with double steam reheating.

Steam reheating used in steam power plants as a means for raising the thermal efficiency of the plant, is similar to the two-stage heat addition in gas-turbine plants, considered in Sec. 10.2.

11.5 Regenerative cycle

As in gas-turbine plants, the thermal efficiency of a steam power plant is raised by means of heat regeneration.

If a steam power plant is operated on a Rankine cycle without steam reheating and if complete regeneration of heat is accomplished, then the thermal efficiency of this Rankine cycle will be equal to the thermal efficiency of a Carnot cycle. Figure 11.25 shows the Rankine wet-steam cycle with full regeneration on a T-s diagram (it is understood that we are speaking of internally reversible cycles).

The efficiency of the Rankine cycle with steam reheating, even with maximum regeneration, will be inferior to the thermal efficiency of the Carnot cycle in the same temperature interval: as it follows from the T-s diagram shown in Fig. 11.26, with the thermal efficiency of the reheat Rankine cycle increasing appreciably, compared with the cycle without regeneration.

The regenerative cycle shown in Fig. 11.26 is represented as an ideal cycle: as was shown in Sec. 10.2 equidistant heat addition and heat rejection lines (line *3-4* and line *7-2*r, respectively, in Fig. 11.26) can be ensured provided an ideal regenerator is used.

It follows from the T-s diagram shown in Fig. 11.26 that the thermal efficiency of the Rankine cycle with maximum regeneration is determined from the expression

$$\eta^{\text{reg}} = 1 - \frac{T_2 (s_{2\text{r}} - s_3)}{i_1 - i_4}. \tag{11.110}$$

In actual steam power cycles regeneration is effected with the aid of surface-type or direct-contact regenerative feed-water heaters, either of which is supplied with steam from intermediate turbine stages (the *regenerative take-off*). The steam condenses in the regenerative feed-water heaters FWH 1 and FWH 2 heating the feed water which is delivered to the boiler. Heating steam condensate is also delivered to the boiler or mixes with the main flow of feed water (Fig. 11.27). Strictly speaking, the regenerative cycle of a steam power plant cannot be represented on a two-dimensional T-s diagram, since this diagram is plotted for a constant amount of working medium, whereas in a regenerative cycle, involving the use of regenerative feed-water heaters, the quantity of the working medium varies along the turbine blading. There-

Fig. 11.25

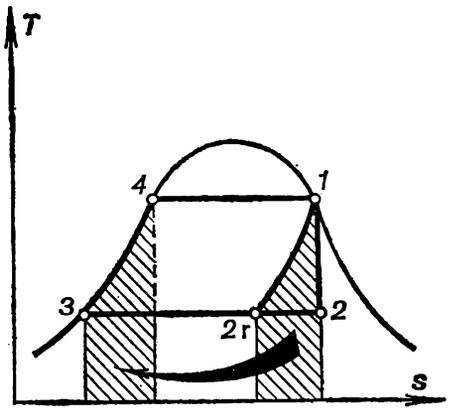

Fig. 11.26

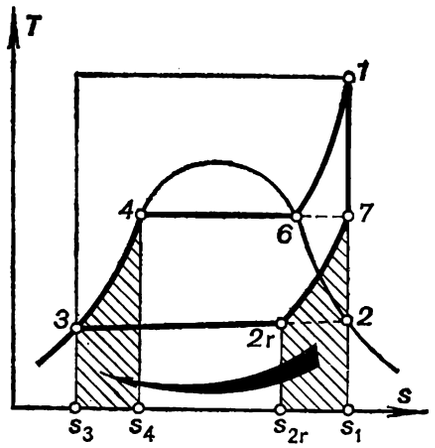

Fig. 11.27

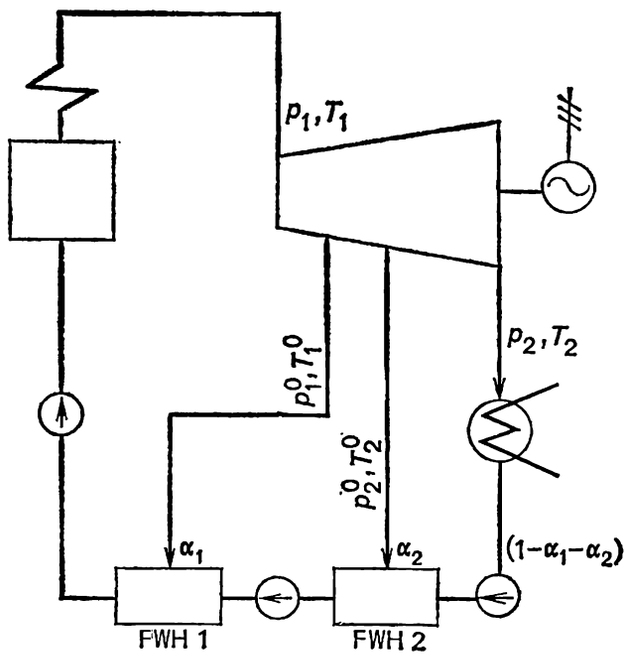

Fig. 11.28

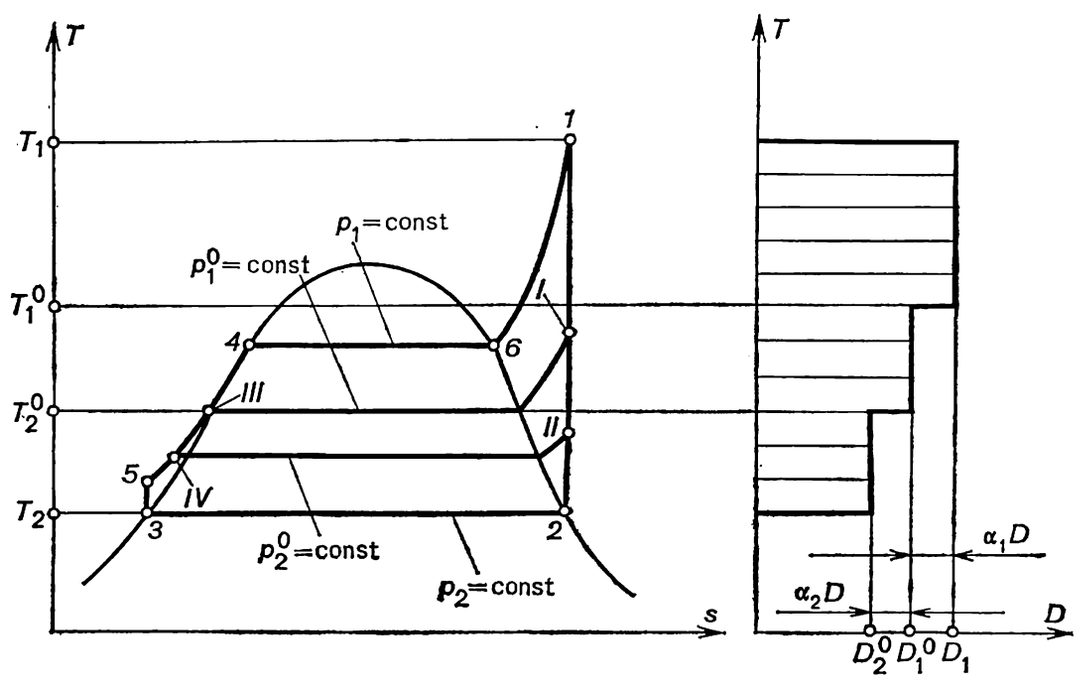

fore, in investigating the cycle plotted on a flat *T-s* diagram (Fig. 11.28), the hypothetical nature of this representation should be borne in mind; for emphasis, a diagram representing the rate of steam flow through the turbine

Fig. 11.29

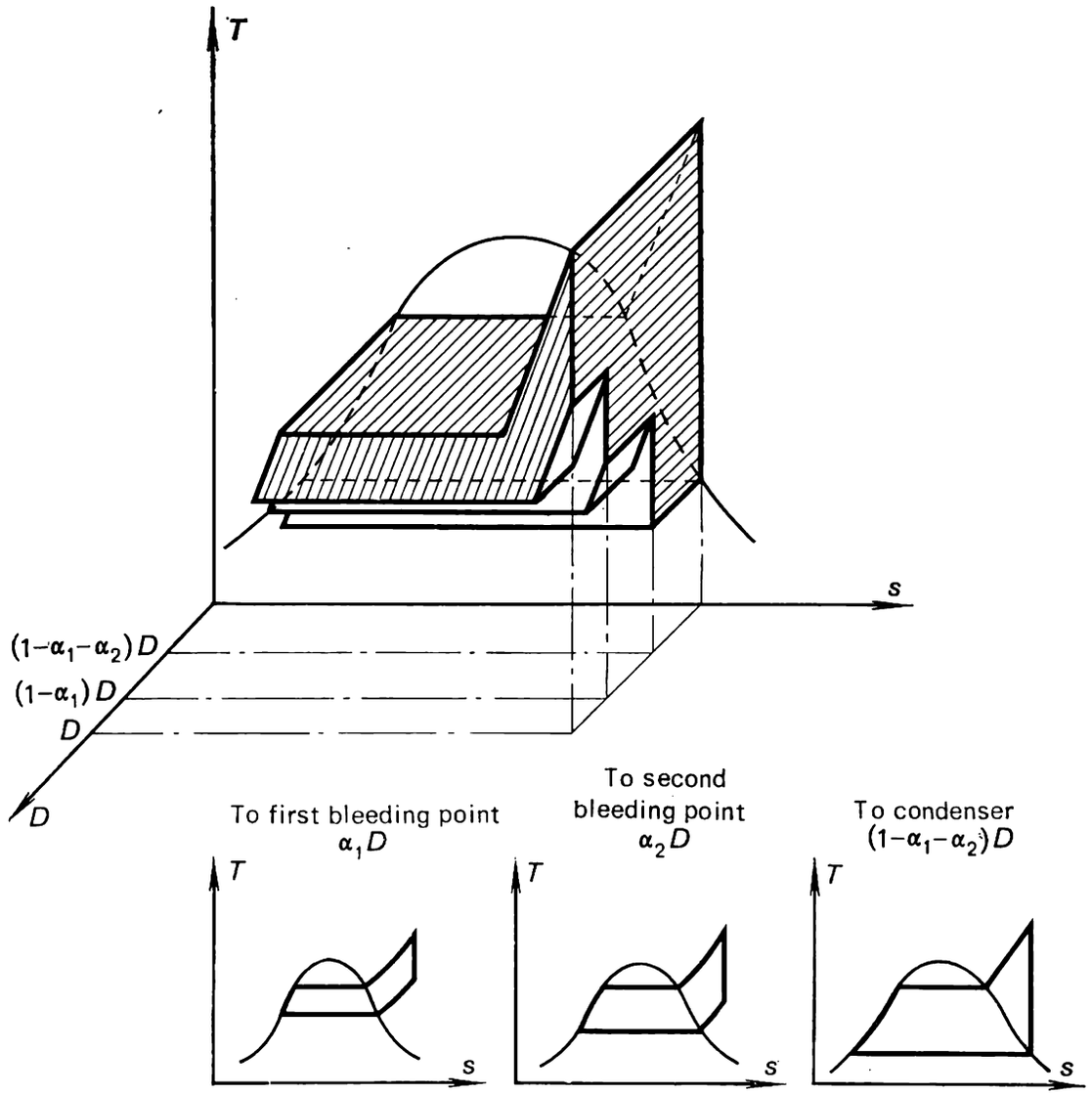

along its blading is shown adjacent to the *T-s* diagram. This new diagram pertains to line *1-2* on the *T-s* diagram, the line of adiabatic expansion of steam in the turbine. Thus, on the section *1-2* of the cycle, shown on the *T-s* diagram, the quantity of the working medium diminishes with a drop in pressure, and along the section *5-4* the quantity of the working medium increases with rising pressure (heating steam condensate is added to the feed water).

Ideally, the regenerative cycle should be represented in a three-dimensional system of coordinates: T, s, D. Figure 11.29 shows a regenerative cycle with two heating stages on a *T-s-D* diagram. The *T-s* diagrams of the cycles realized by three fractions of the steam flow are shown in the same illustration: the fraction of steam bled into the first heating stage ($\alpha_1 D$), the fraction of steam bled from the turbine into the second heating stage ($\alpha_2 D$) and the fraction passing into the condenser $[(1 - \alpha_1 - \alpha_2)D]$. Since it is rather

difficult to make use of the three-dimensional system of coordinates, they find no practical application.

When not surface-type but direct-contact regenerative heaters are used, in accordance with the layout of the steam power plant shown in Fig. 11.27, several pumps must be installed, since water pressure should be increased in steps: the pressure of the water flowing into a direct-contact heater should be equal to the pressure of the steam bled for this heater. In the diagram the number of pumps exceeds the number of steam bleeding points by one.

Let us consider in detail the cycle of the regenerative steam power plant with two direct-contact feed-water heaters, depicted in Fig. 11.27 (an internally reversible cycle is considered). Denote the fraction of the working medium bled from the turbine by α. If the rate of steam flow at the turbine entry is denoted by D, then $\alpha_1 D$ kg/h of steam is bled from the turbine and directed into the first regenerative heater FWH1, and $\alpha_2 D$ kg/h of steam is bled into the second regenerative heater FWH2.

Hence, up to the first bleeding point D kg/h of steam performs work in the turbine, downstream from this point $(1 - \alpha_1)D$ kg/h of steam performs work, and downstream from the second bleeding point $(1 - \alpha_1 - \alpha_2)D$ kg/h of steam performs work.

Correspondingly, $(1 - \alpha_1 - \alpha_2)D$ kg/h of exhaust steam passes into the condenser; $(1 - \alpha_1 - \alpha_2)D$ kg/h of water (condensate) from the condenser and $\alpha_2 D$ kg/h of steam from the second bleeding point are delivered into the second regenerative heater. As a result of the mixing of bled steam and condensate $(1 - \alpha_1)D$ kg/h of heated feed water leaves the second regenerative heater. Directed into the first regenerative heater is $(1 - \alpha_1)D$ kg/h of water from the second heater and $\alpha_1 D$ kg/h of steam from the first bleeding point; the water and steam mix and D kg/h of heated feed water leaves this heater. The feed water flows to the feed pump which delivers it to the boiler. Let us find out on what basis the values of α_1 and α_2 are selected.

The conditions of the steam bled from the turbine are preset. Let us denote steam pressure at the first bleeding point by p_{I}^{0} and the pressure of steam at the second bleeding point by p_{II}^{0}.

The pump delivers $(1 - \alpha_1 - \alpha_2)D$ kg/h of feed water from the condenser into the second regenerative heater at a pressure of p_{II}^{0}. This water is not heated to the boiling point corresponding to the pressure p_{II}^{0}; the temperature of this feed water is somewhat higher than T_2. Let us denote its enthalpy by $i_{\mathrm{II}}^{\mathrm{w}}$. From the bleeding point $\alpha_2 D$ kg/h of superheated steam is delivered into the heater at the same pressure p_{II}^{0}. Denote the enthalpy of this superheated steam by $i_{\mathrm{II}}^{\mathrm{s}}$. The value of α_2 is selected so that the mixing of superheated steam and water at a temperature below the boiling point will yield feed-water heated to the boiling point corresponding to the pressure p_{II}^{0}. The enthalpy of saturated water at the pressure p_{I}^{0} will be denoted by $i_{\mathrm{II}}^{\mathrm{w}'}$. The heat balance equation for the second regenerative heater takes the following form:

$$(i_{\mathrm{II}}^{\mathrm{s}} - i_{\mathrm{II}}^{\mathrm{w}'})\,\alpha_2 = (i_{\mathrm{II}}^{\mathrm{w}'} - i_{\mathrm{II}}^{\mathrm{w}})\,(1 - \alpha_1 - \alpha_2). \qquad (11.111)$$

The first regenerative feed-water heater receives water in the amount of $(1 - \alpha_1)D$ kg/h at a pressure p_{I}^{0}; denote its enthalpy by $i_{\mathrm{I}}^{\mathrm{w}}$. Superheated steam flows from the first bleeding point into the heater in the amount of $\alpha_1 D$ kg/h; denote the enthalpy of this steam by $i_{\mathrm{I}}^{\mathrm{s}}$. Just as for the second

regenerative heater, the rate of flow from the first bleeding point into the first heater is selected so that water leaves the heater at the boiling point corresponding to the pressure p_{I}^{0}; the enthalpy of this feed water is denoted $i_{\mathrm{I}}^{\mathrm{w}'}$.

The heat balance equation for the first regenerative heater takes the following form:

$$(i_{\mathrm{I}}^{\mathrm{s}} - i_{\mathrm{II}}^{\mathrm{w}'})\,\alpha_1 = (i_{\mathrm{I}}^{\mathrm{w}'} - i_{\mathrm{I}}^{\mathrm{w}})\,(1 - \alpha_1). \tag{11.112}$$

Equations (11.111) and (11.112) yield:

$$\alpha_1 = \frac{i_{\mathrm{I}}^{\mathrm{w}'} - i_{\mathrm{I}}^{\mathrm{w}}}{i_{\mathrm{I}}^{\mathrm{s}} - i_{\mathrm{I}}^{\mathrm{w}}}, \tag{11.113}$$

$$\alpha_2 = \frac{i_{\mathrm{II}}^{\mathrm{w}'} - i_{\mathrm{II}}^{\mathrm{w}}}{i_{\mathrm{II}}^{\mathrm{s}} - i_{\mathrm{II}}^{\mathrm{w}}}. \tag{11.114}$$

As a result of regenerative heating, feedwater is delivered into the boiler at a temperature of T_{I}^{0}, i.e. at the saturation temperature corresponding to the pressure p_{I}^{0}. The enthalpy of water in this state is $i_{\mathrm{I}}^{\mathrm{w}'}$.* Hence, the amount of heat added in the boiler to 1 kg of working medium is

$$q_1^{\mathrm{reg}} = i_1 - i_{\mathrm{I}}^{\mathrm{w}'}. \tag{11.115}$$

In the condenser an amount of heat $(i_2 - i_3)$ is removed from each kilogram of steam. However, since we have shown that from each kilogram of steam entering the turbine only $(1 - \alpha_1 - \alpha_2)$ kilograms of exhaust steam enters the condenser, it is clear that the heat rejected from one kilogram of exhaust steam amounts to

$$q_2^{\mathrm{reg}} = (i_2 - i_3)\,(1 - \alpha_1 - \alpha_2). \tag{11.116}$$

It follows that, in accordance with the general relationship (9.1), the equation for the thermal efficiency of the regenerative feed-water cycle with two steam bleedings can be presented in the following form:

$$\eta^{\mathrm{reg}} = 1 - \frac{(i_2 - i_3)\,(1 - \alpha_1 - \alpha_2)}{i_1 - i_{\mathrm{I}}^{\mathrm{w}'}}. \tag{11.117}$$

The problem of determining the thermal efficiency of the regenerative feed-water cycle can also be approached in another way.

One kilogram of steam passing into the condenser produces in the turbine the following amount of work:

$$l_{1-\alpha_1-\alpha_2} = i_1 - i_2. \tag{11.118}$$

One kilogram of steam bled from the turbine into the second regenerative heater, performs in the turbine the following amount of work prior to bleeding:

$$l_{1-\alpha_1} = i_1 - i_{\mathrm{II}}^{\mathrm{s}}. \tag{11.119}$$

Finally, one kilogram of steam bled into the first regenerative heater does the following amount of work in the turbine:

$$l_1 = i_1 - i_{\mathrm{I}}^{\mathrm{s}}. \tag{11.120}$$

* The increase in water enthalpy due to compression in the feed pump is assumed to be negligible.

Taking into account Eqs. (11.118) to (11.120), the work of the regenerative cycle* can be presented in the form

$$l_c = (1 - \alpha_1 - \alpha_2)(i_1 - i_2) + \alpha_2 (i_1 - i_{II}^s) + \alpha_1 (i_1 - i_I^s). \qquad (11.121)$$

Taking Eq. (11.115) into account, we obtain from the above formula the following expression for the thermal efficiency of the regenerative feed-water cycle:

$$\eta^{reg} = \frac{(1 - \alpha_1 - \alpha_2)(i_1 - i_2) + \alpha_2 (i_1 - i_{II}^s) + \alpha_1 (i_1 - i_I^s)}{i_1 - i_I^{w'}} \qquad (11.122)$$

Finally, the work done by the steam in the cycle will be equal to the work which would be done by 1 kg of steam without bleeding minus the work which would be performed by the fractions of 1 kg of steam bled into the

Fig. 11.30

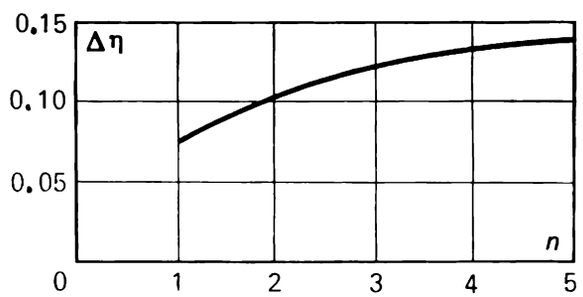

heaters (if the fractions of steam were expanded in the turbine to the condenser pressure):

$$l_c = (i_1 - i_2) - \alpha_1 (i_I^s - i_2) - \alpha_2 (i_{II}^s - i_2). \qquad (11.123)$$

From Eq. (11.123) we obtain one more expression for the thermal efficiency of the regenerative cycle with two steam bleedings:

$$\eta^{reg} = \frac{(i_1 - i_2) - \alpha_1 (i_I^s - i_2) - \alpha_2 (i_{II}^s - i_2)}{i_1 - i_I^{w'}}. \qquad (11.124)$$

It is understood that the three equations for the thermal efficiency of the regenerative cycle, (11.117), (11.122) and (11.124), are identical.

Of a similar nature are the equations for the thermal efficiency of the regenerative cycle with any number of heating stages. In particular, the expression similar to Eq. (11.124) for a cycle with n heating stages can be written in the form

$$\eta^{reg} = \frac{i_1 - i_2 - \sum_{j=1}^{n} \alpha_j (i_j^s - i_2)}{i_1 - i_I^{w'}}. \qquad (11.125)$$

An analysis shows that an increase of the number of regenerative heating stages leads to a higher cycle thermal efficiency, for in this case the degree of regeneration in the cycle approaches the maximum (Fig. 11.26). However, each subsequent stage of regenerative heating contributes less and less to the rise in thermal efficiency, as can be seen from the graph in Fig. 11.30, where

* The work performed by the feed pump is ignored.

the rate of increase in the thermal efficiency of a regenerative cycle, $\Delta\eta$, is plotted as a function of the number of regenerative heating stages, n; the graph is plotted for the case of uniform distribution of feed-water heating among individual stages.

In modern high-power steam power plants operated at high steam conditions the number of regenerative heating stages reaches nine.

The selection of bleeding points on a turbine for supplying steam to direct-contact regenerative feed-water heaters (i.e. the selection of the temperature to which feed water is to be heated in each of the heating stages*) is the subject for special analysis, a detailed consideration of which is beyond the scope of this book. It will only be noted that the criterion in selecting a particular distribution of regenerative heating by stages is to ensure a maximum economy, usually attained by raising the thermal efficiency of the cycle. With an infinite number of feed-heating stages the cycle thermal efficiency is determined unambiguously, but when a finite number of feed-heating stages is operated, the cycle efficiency will differ depending on the mode of temperature distribution between individual stages.

11.6 Binary cycles

On the basis of our analysis of steam power cycles we can formulate the requirements which the most thermodynamically and operationally convenient working medium is expected to meet. These requirements are as follows:

(1) The working medium must ensure as high a cycle area ratio as possible. For this purpose it must have as low an isobaric (constant-pressure) heat capacity in the liquid state as possible (in this case the isobars, whose slope is determined by the quantity $(\partial T/\partial s)_p$, will run quite steep on the diagram approaching the vertical). It is also desirable that the working medium possess highest possible critical parameters, or conditions; at the same vapour saturation temperature a higher cycle area ratio is characteristic of the cycle realized with a working medium at higher critical parameters.

(2) The properties of the working medium should be such that with a sufficiently high cycle area ratio the high upper cycle temperature is ensured at not a very high vapour pressure, i.e. that a high thermal efficiency is ensured without passing to excessively high pressures. This makes plant construction more complicated. On the other hand, the working medium should be such that its saturation pressure at the lowest cycle temperature (i.e. at the temperature close to that of the surroundings) is not too low; an excessively low saturation pressure will require a high vacuum to be maintained in the condenser, involving great technical difficulties.

(3) The working medium must be cheap; it should not chemically attack the construction materials used to build the power plant; it should not be harmful to the attending personnel, i.e., it should not be toxic.

Unfortunately, at the present time no working medium is known that would meet all these requirements completely. The working medium most widely used in modern heat-and-power engineering, water, does not have

* Since as was mentioned above, saturated feedwater leaves the heater, the temperature of feedwater at the exit of a direct-contact regenerative heater is determined directly by the pressure in the heater, equal to that of the bled steam.

a sufficiently low heat capacity in the liquid state, but it satisfies the need for a not too low pressure in the condenser; water is a rather suitable working medium for the low-temperature processes of a cycle. However, operation of power plants with high steam cycle area ratios, involves the use of high pressures; in this case, due to the comparatively low critical temperature of water, when passing to high pressures, the length of the isobaric-isothermal section of the two-phase region diminishes. This decreases the rate at which the cycle area ratio increases when passing to high pressures. It is precisely due to this that the mean heat-addition temperature is comparatively low in a steam power cycle. This, as was shown in Sec. 11.3, leads to considerable availability losses.

Other working media have other shortcomings. For example, mercury

Fig. 11.31

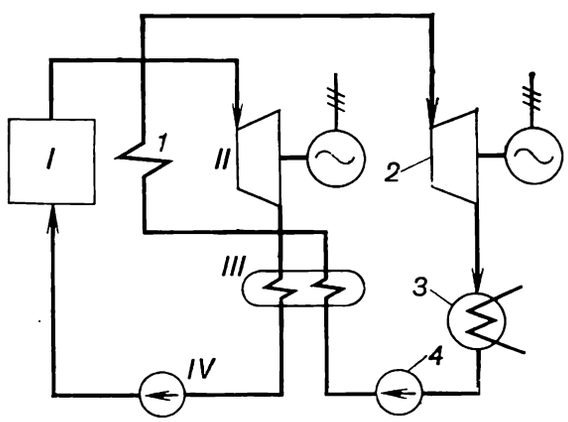

has a low saturation pressure at high temperatures and high critical parameters: $p_{cr} = 151$ MPa (1540 kgf/cm²) and $T_{cr} = 1490$ °C. At a temperature of 550 °C, for instance, the saturation pressure of mercury is only 1420 kPa (14.5 kgf/cm²). This permits the Rankine cycle to be realized with saturated mercury vapour without superheating, ensuring a sufficiently high thermal efficiency. On the other hand, at temperatures close to the temperature of the surroundings the saturation pressure of mercury is too low: for $T = 30$ °C we find that $p_s = 0.36$ Pa (3.7×10^{-6} kgf/cm²), while for the pressure usually maintained in the condensers of steam turbines [$p_s \cong 4$ kPa (0.04 kgf/cm²)] there is an excessively high mercury saturation temperature, $T_s = 217.1$ °C. The thermal efficiency of a cycle realized with so high a lower cycle temperature would be low. Thus, mercury is suitable as a working medium for the upper (high-temperature) part of a cycle but cannot be used to realize its lower part.

Since at the present time no working medium is known that would meet the above requirements throughout the entire temperature interval of a cycle, it is possible to realize a cycle with two working fluids, using each in the temperature interval in which the working medium has the greatest advantages.

Cycles of this kind are referred to as *binary cycles*. The schematic diagram of a heat power plant operated on a *mercury-water cycle* is shown in Fig. 11.31.

In the mercury boiler *I* heat is added to the mercury, the mercury evaporates and dry saturated mercury vapour flows at a pressure p_I^M into the

mercury turbine *II* where the mercury vapour does work transferred to the electric generator coupled with the turbine. From the turbine the waste mercury vapour, which is at a pressure p_2^M, is sent into the condenser-evaporator *III*, where it condenses. Pump *IV* then delivers the liquid mercury into boiler *I* raising the mercury pressure from p_2^M to p_1^M.

The condenser-evaporator is a surface-type heat exchanger in which heat is transferred from the condensing mercury vapour to the cooling water. This heat heats the cooling water in the condenser-evaporator to the boiling point, and the water evaporates. From the condenser-evaporator the dry saturated water vapour, steam, is sent into superheater *1*, usually arranged in the gas flue of the mercury boiler. The superheated steam flows at a pressure of p_1^w into steam turbine *2* coupled with an electric generator. The pressure of exhaust steam is p_2^w, and it condenses in condenser *3*; pump *4* then delivers the water (condensate) into the condenser-evaporator.

It should be noted that the rates of working medium flow in the mercury and steam-generating circuits differ. The relation between the rate of flow of mercury and the rate of flow of water through their respective circuits is determined on the basis of the following considerations. Let us consider, for instance, a binary vapour cycle in which the mercury cycle is realized with dry saturated mercury vapour in the pressure interval of $p_I^M = 1180$ kPa $= 12$ kgf/cm² (at that pressure the mercury saturation temperature is $T_1^M = 532.1$ °C) and $p_2^M = 9.8$ kPa $= 0.1$ kgf/cm² (the saturation temperature $T_2^M = 250$ °C), and the initial parameters of steam in the water-vapour cycle are $p_1^w = 3330$ kPa $= 34$ kgf/cm² ($T_s = 239.8$ °C*) and $T_1 = 400$ °C at the lower pressure $p_2^w = 4$ kPa $= 0.04$ kgf/cm².

At a pressure of 0.1 kgf/cm² the latent heat of vapourization of mercury, $r^M = 299.0$ kJ/kg (71.42 kcal/kg), and the difference between the enthalpies of dry saturated water vapour (steam) and water at a temperature of 28.6 °C on the isobar with 3330 kPa (i.e. the total amount of heat required to heat the water leaving the condenser to the boiling point and then to evaporate it) is equal to 2680 kJ/kg (640 kcal/kg). It is clear that to heat 1 kg of water to the boiling point in the condenser-evaporator and then evaporate it, heat must be rejected (transferred) from 640/71.42 = 8.95 kg of the condensing mercury vapour. Thus, the rate of working medium flow in the mercury circuit of a binary plant must be 8.95 times the rate of working medium flow in the steam-generating circuit of this plant. In the general case, this ratio of the mercury and water rates of flow, m, is determined from the relation

$$m = \frac{i_1^w - i_5^w}{r^M} \frac{1}{\eta_{c.e.}}, \tag{11.126}$$

where $\eta_{c.e.}$ is the efficiency of the condenser-evaporator, accounting for the heat losses in this device.

The *T-s* diagram of this binary vapour cycle is shown in Fig. 11.32. This diagram is plotted for 1 kg of water and 8.95 kg of mercury, assuming the cycle to be internally reversible. The steam generating part of the cycle is an ordinary Rankine cycle realized with superheated steam. The mercury part

* It follows that in the condenser-evaporator the difference between the temperatures of the condensing mercury vapour and of the evaporating water is $\Delta T = 250.0 - 239.8 = 10.2$ °C.

above the steam-generating cycle is a Rankine cycle realized with wet vapour. Here *ab* represents the adiabatic process in the mercury turbine, *bc* the heat transfer from the condensing mercury vapour, *cd* the process proceeding in the mercury pump, and *dea* shows the isobaric process of adding heat to the mercury in the mercury boiler.

The reader may be puzzled, since it was mentioned above that when water vapour (steam) is used as a working medium, the Rankine cycle without superheating is usually not practised due to the fact that at the end of the process of expansion in the turbine the wetness of the expanding steam is very high, reducing sharply the internal relative efficiency of the turbine. But then why can the mercury cycle without superheating be used without any

Fig. 11.32

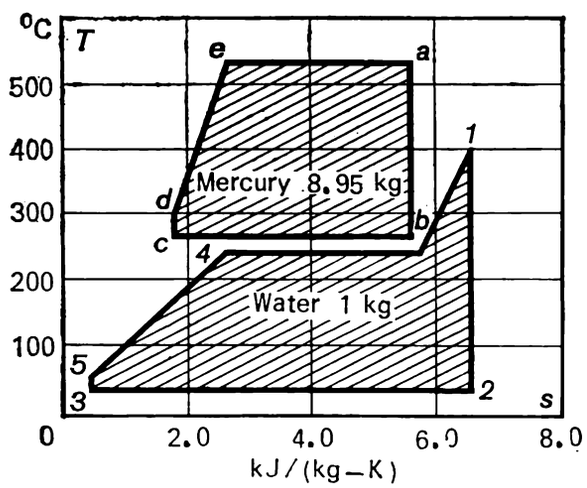

reservations? In fact, on the *T-s* diagram for mercury the right boundary curve runs much steeper than that plotted for water. Owing to this, the state of the waste mercury vapour at the exit of the mercury turbine happens to be located in the wet vapour region, close to the right boundary curve, i.e. in the zone of high dryness fractions.

The thermal efficiency of the binary vapour cycle is determined from the expression

$$\eta^{\text{bin}} = \frac{ml^{\text{M}} + l^{\text{w}}}{mq_1^{\text{M}} + q_1^{\text{w}}}, \tag{11.127}$$

where l^{M} and l^{w} are the amounts of work performed in the mercury and water-vapour parts of the binary cycle and q_1^{M} and q_1^{w} are the amounts of heat added in the mercury and water-vapour parts of the binary cycle. The values of l and q_1 are usually given per kilogram of the working medium, and the difference between the amounts of the working medium used in the mercury and water-vapour parts of the cycle is accounted for by the ratio of mercury and water, m. It must be emphasized that in the binary vapour cycle q_1^{w} is the heat which is expended to superheat the water vapour, or steam, i.e. $q_1^{\text{w}} = i_1 - i_6$ (inasmuch as the water is heated to the boiling point and then evaporated at the expense of the heat released by the condensing mercury vapour).

In the binary vapour cycle considered,

$$l^{W} = 3225 - 2066 = 1159 \text{ kJ/kg } (277.0 \text{ kcal/kg}),$$
$$q_1^{W} = 3225 - 2929 = 296 \text{ kJ/kg } (70.9 \text{ kcal/kg}),$$
$$l^{M} = 364 - 254 = 110 \text{ kJ/kg } (26.3 \text{ kcal/kg}),$$
$$q_1^{M} = 364 - 35 = 329 \text{ kJ/kg } (78.7 \text{ kcal/kg}).$$

Allowing for $m = 8.95$, Eq. (11.127) gives:

$$\eta^{bin} = \frac{8.95 \times 110 + 1159}{8.95 \times 329 + 296} = 0.66.$$

For comparison let us calculate the thermal efficiencies of the upper mercury and lower water-vapour cycles of the binary vapour cycle:

$$\eta^{W} = l^{W}/q_1^{W} = 1159/3102 = 0.37$$

(in this case $q_1^{W} = i_1 - i_5 = 3102$ kJ/kg) and

$$\eta^{M} = l^{M}/q_1^{M} = 110/329 = 0.33.$$

In this way, the use of the mercury cycle on top of the water-vapour cycle permits an important increase of the cycle thermal efficiency.

In addition to mercury, diphenyloxide $(C_6H_5)_2O$, a diphenyl mixture (75% diphenyloxide and 25% diphenyl $C_{12}H_{10}$), antimony bromide $SbBr_3$, silicon bromide $SiBr_4$, aluminium bromide Al_2Br_3 and other substances are suggested for use as working media in the upper cycle of the binary vapour cycle.

It should be noted, however, that up till now binary vapour cycles have not been widely used*, chiefly because of the technical difficulties involved in erecting such plants.

11.7 Thermification cycles

In the process of power generation in thermal electric power stations, a great amount of heat is transferred to the low-temperature source, the water cooling the condenser, and is thus lost. The amount of heat transferred to the low-temperature source, q_2, can be decreased by raising the thermal efficiency of the given cycle. However, this loss cannot be fully eliminated since, in accordance with the second law of thermodynamics, the transfer of a certain amount of heat to the low-temperature source is inevitable.

If it is impossible in principle to eliminate the transfer of heat to the low-temperature source, then is this heat unusable? As is known, great amounts of hot water and steam are used for all kinds of technological processes, for heating buildings and hot-water supply.

In ordinary steam power plants with condensing turbines, the condenser pressure is maintained equal to about 4 kPa (0.04 kgf/cm²), i.e. exhaust steam condenses at a temperature of about 29 °C. The heat transferred to the cooling water in such a condenser has a low temperature potential, and it

* Several mercury-water binary vapour plants, rated from 1800 to 20 000 kW, were built in the 1920's and 1930's.

cannot be used for process work or for heating and hot-water supply purposes. Technological processes usually need saturated steam at a pressure from 250 to 2000 kPa (i.e. from about 2.5 to 30 kgf/cm²), and buildings are heated with saturated steam at a pressure from 150 to 260 kPa (1.5 to

Fig. 11.33

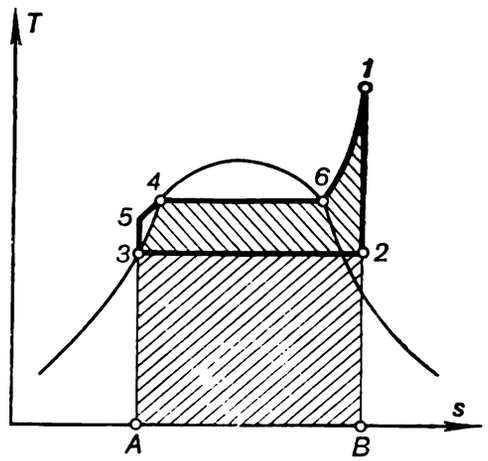

Fig. 11.34

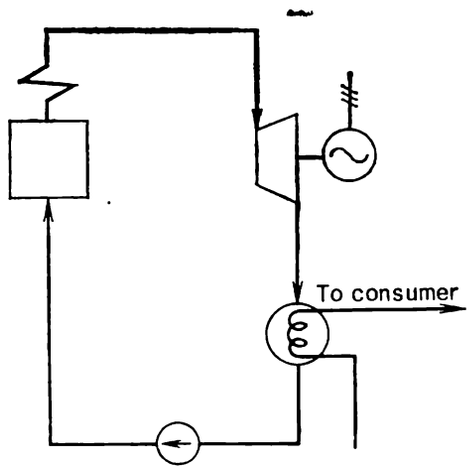

Fig. 11.35

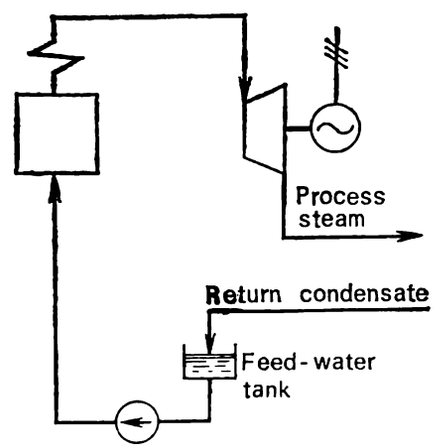

2.6 kgf/cm²). Hot water at a temperature reaching 180 °C is also used in some installations.

In order to be able to utilize the heat rejected from the condensing exhaust steam, condenser pressure must be raised, i.e. it is necessary to raise the temperature at which this steam condenses. An increase of the lower cycle temperature will result in a certain decrease in the thermal efficiency and, consequently, in a reduction of the amount of power generated with the same fuel expenditure as before. Therefore, from the point of view of cycle effectiveness, such an operation is disadvantageous. However, the possibility of getting great amounts of heat for industry and heating purposes by some reduction in power generation is very expedient (it makes it unnecessary to construct special heating boiler houses, which as a rule are small and operate with a relatively low efficiency and require therefore a higher fuel consumption; in addition, such boiler houses use heat of a high temperature potential, realized upon fuel combustion in boiler furnaces, to heat a low-temperature

working medium, which is irrational due to the inevitable decrease of system availability).

Electric stations engaged in the generation of heat and electric power use *back pressure turbines* or *extraction turbines*. District heating systems are used more in the planned socialist economy of the U.S.S.R., which permits the fulfillment of complex economic undertakings.

Steam power plants engaged in combined generation of electric power and heat are referred to as *heating and power plants*, as distinct from power plants fitted with condensing turbines and generating only electric power.

The *T-s* diagram of a heating and power plant is shown in Fig. 11.33. As usual, the work of the cycle is represented by the area *1-2-3-5-4-6-1*, and

Fig. 11.36

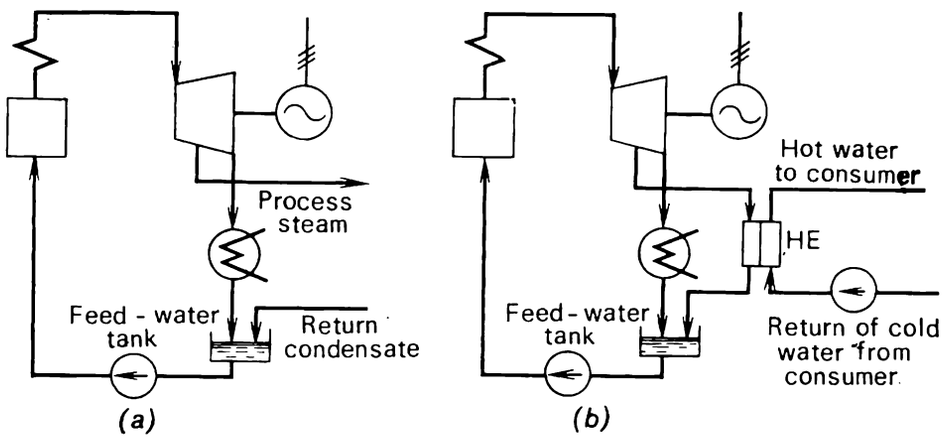

the area *A-3-2-B-A* represents the heat q_2 transferred to the external consumer.

Since, as was mentioned above, industry and district heating systems require steam and hot water at a relatively wide range of temperatures and pressures, heating and power plants use back pressure and extraction turbines of different types, depending on the nature of heat consumption.

Figure 11.34 shows the schematic diagram of a heating and power plant with *turbines with a deteriorated vacuum*. The pressure maintained in the condenser of such a turbine is such that the vapour saturation temperature is sufficiently high to ensure the required heating of the cooling water in the condenser. The cooling water, heated in the condenser to the required temperature, is delivered to district heating systems.

Figure 11.35 shows the schematic diagram of a heating and power plant fitted with back pressure turbines. In these plants there is no condenser and the exhaust steam, leaving the turbine, is directed via a pipeline to be used as industrial steam in apparatuses in which heat is rejected from the steam and the steam condenses; the condensate is returned to the plant as feed water for the boilers. The pressure of the exhaust steam leaving the turbine is determined depending on industrial steam requirements.

The heating and power plant depicted schematically in Fig. 11.36 is fitted with extraction turbines. In this kind of plant steam at quite high conditions is extracted from intermediate turbine stages (from this viewpoint this layout resembles the power plant with regenerative feed-water heaters). The extracted steam can be directed to be used for industrial purposes (so-called industrial steam extraction), and condensate is returned to the plant

(Fig. 11.36*a*), or to special heaters (heat exchangers; HE) in which this steam heats water to be used in district heating systems (so-called district-heating extraction, Fig. 11.36*b*). It ought to be mentioned that extraction turbines are most widely used in modern heating and power plants.

Economic performance of a heating and power plant is characterized by the *heat-utilization factor* K, defined as the ratio of the useful work done in the cycle (l_p) plus the heat transferred to the external consumer (q_2) to the amount of heat released upon fuel combustion in boiler furnaces, q_1:

$$K = (l_p + q_2)/q_1, \tag{11.128}$$

or, which is the same,

$$K = \frac{N+Q}{BQ_1}, \tag{11.129}$$

where N is the electric capacity of the power plant, B the hourly fuel consumption, Q_1 the lower calorific value of fuel, and Q the amount of heat transferred to the external consumer.

The more perfect the plant, the closer is the heat-utilization factor K to unity, i.e. the least amount of heat losses in the boiler unit and turbine and the mechanical and electrical losses in the generator.

12

Cycles of direct-energy conversion systems

Systems in which heat is converted into electric power, by omitting such intermediate stages as the conversion of heat into the kinetic energy of the flow of a working medium and the kinetic energy of the working medium into the kinetic energy of rotation of a turbine rotor and of the rotor of a coupled electric generator, are referred to as *direct-energy conversion systems.*

These systems include thermoelectric generators and thermionic converters. Magnetohydrodynamic generators are usually also classified as direct-energy conversion systems, although, as will be shown below, this is to a certain extent conditional.

Fuel cells in which the chemical energy of fuel is directly converted into electrical energy (bypassing the stage of conversion of chemical energy into heat) and photoelectric converters, which are not considered in this book are also classified as direct-energy conversion systems.

12.1 Thermoelectric generator cycle

In 1821, the German physicist T. J. Seebeck discovered that in an electric circuit made up of two dissimilar conductors a potential difference sets in if the junctions of these two conductors are held at different temperatures (Fig. 12.1). This potential difference is referred to as the *thermoelectromotive force* (thermoelectric e.m.f.), the electric circuit in which the thermoelectro-

motive force appears is called the *thermoelectric circuit*, and the materials making up the thermoelectric circuit are known as *thermoelectrodes*.

The magnitude of the potential difference happens to be proportional to the difference between the temperatures of the junctions of the dissimilar conductors:

$$\Delta E = \alpha \Delta T, \tag{12.1}$$

or in the differential form

$$dE = \alpha dT, \tag{12.1a}$$

where E is the thermoelectromotive force, and α is the so-called *thermoelectric power*.

Fig. 12.1

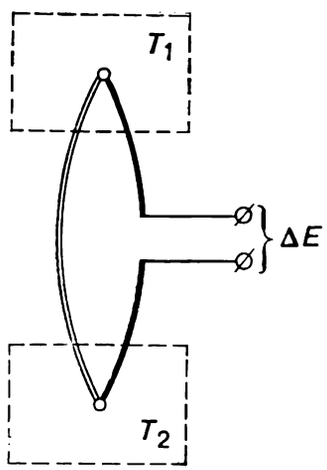

Fig. 12.2

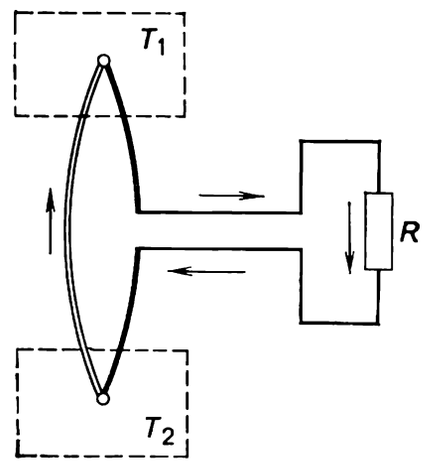

It follows from Eq. (12.1a) that the thermoelectric power α is equal to the thermoelectromotive force appearing in the circuit at a junction temperature difference of one degree. Thermoelectric power is usually measured in volts per degree (or millivolts per degree), and is generally a function of temperature, but for the sake of simplicity it will be assumed to be independent of temperature.

Integrating Eq. (12.1a) and assuming that α does not depend on temperature, we obtain:

$$E_1 - E_2 = \alpha(T_1 - T_2), \tag{12.2}$$

where the subscripts "1" and "2" pertain to the hot and cold junctions of the thermoelectric circuit (we will assume that the hot junction is that which is at a higher temperature).

It is clear that if we close this circuit with an external electrical resistance (the winding of an electric motor, an electric heater, etc.), the thermoelectric circuit will carry a current (Fig. 12.2).

If we reverse the temperature of the junctions (i.e. place the junction at a temperature T_1 into surroundings at a temperature T_2 and the other junction which was at the temperature T_2 into surroundings at a temperature T_1), a current of the same intensity but in the opposite direction will appear in the circuit.

The Seebeck effect is used in measuring. For instance, common simple instruments to measure a temperature difference, called *thermocouples*, are thermoelectric circuits in which a thermoelectromotive force appears when the junctions are kept at different temperatures. Having measured the ther-

moelectromotive force and knowing the temperature of one of the thermocouple junctions, it is possible to determine the temperature of the surroundings in which the other junction is held (we must know the magnitude of α, determined by preliminary calibration).

The thermoelectric effect can also be used to generate electrical energy. A thermoelectric generator based on the Seebeck effect was first suggested as early as 1885 by the English physicist Lord Rayleigh (J. W. Strutt). However, this idea was not realized for a long time since the thermoelectrode materials then available permitted the construction of thermoelectric generators with a very low thermal efficiency. In 1929, the Soviet physicist A. F. Ioffe pointed out that semiconductor thermoelectrodes in thermoelectric generators had great potential. Further research by Ioffe and his collaborators and also by other scientists have fully substantiated Ioffe's conclusion. Presently, thermoelectric generators are being used more and more.

Let us consider one more physical effect, closely associated with the Seebeck effect. This is the *Peltier effect*, discovered by the French physicist J. Peltier in 1834. The essence of the Peltier effect consists in the following. If a circuit composed of two dissimilar conductors carries a current from an external source of electrical energy, one of the junctions of this circuit absorbs heat and the other releases heat. If the direction of current flow is reversed, the junction which formerly absorbed heat will release heat and the other junction will absorb heat, with the quantity of heat Q_P absorbed by or released from a junction being proportional to current intensity I:

$$Q_P = \pi I; \tag{12.3}$$

the factor π is known as the *Peltier coefficient.*

The Peltier coefficient is related to α by the following expression:

$$\pi = \alpha T. \tag{12.4}$$

Allowing for formula (12.4), Eq. (12.3) can be presented in the form

$$Q_P = \alpha T I. \tag{12.5}$$

In accordance with Seebeck's law as soon as a closed thermoelectric circuit begins to carry a current, the Peltier effect "comes immediately into action" and the hot junction begins to absorb heat from the surroundings (denote this heat by Q_1^P), and the cold junction begins to transfer heat to the surroundings (denote this heat by Q_2^P), the superscript "P" indicating that this heat is associated with the Peltier effect.

Let us now analyze the processes in a thermoelectric generator. Like any heat engine, the thermoelectric generator is capable of converting heat into work, provided there are heat sources which are at different temperatures.

The surroundings at a higher temperature T_1 in which the hot junction of the thermoelectric circuit is placed will be referred to as the high-temperature source, and the surroundings at a lower temperature T_2, holding the cold junction of the thermoelectric circuit, as the low-temperature source. In accordance with Eq. (12.2), the thermoelectromotive force appearing in the circuit is

$$\Delta E = \alpha(T_1 - T_2),$$

where T_1 and T_2 are the temperatures of the hot and cold junctions. If this circuit is closed across an external resistance, a current I will begin to flow

through the circuit, with the hot junction absorbing, in accordance with Eq. (12.5), the following amount of heat from the high-temperature source:

$$Q_1^{\mathrm{P}} = \alpha T_1 I, \tag{12.6}$$

and the cold junction transfers to the low-temperature source heat

$$Q_2^{\mathrm{P}} = \alpha T_2 I. \tag{12.7}$$

We know that if there is a potential difference in a circuit, the latter carries a current, and the work L performed by this current is equal to the product of current intensity and the potential difference, i.e.

$$L = \alpha(T_1 - T_2)I. \tag{12.8}$$

If we denote the electric resistance of the thermoelectrodes proper by r and the external resistance by R, the work of the electric current, whose intensity is determined from Eq. (12.8), will be expended to overcome the internal resistance (Joule's losses inside the thermoelectric generator, Q_{J}) and to overcome the external resistance, i.e. to perform useful external work L_{c}. Consequently, we can write that

$$\alpha(T_1 - T_2)I = Q_{\mathrm{J}} + L_{\mathrm{c}}, \tag{12.9}$$

whence we obtain the amount of work transferred to an external consumer:

$$L_{\mathrm{c}} = \alpha(T_1 - T_2)I - Q_{\mathrm{J}}. \tag{12.10}$$

It may be assumed with a sufficient degree of accuracy that one half of the Joule heat Q_{J}, liberated in the electrodes of the thermoelectric generator, is transferred to the hot junction (i.e. to the high-temperature source), and the other half to the cold junction (i.e. to the low-temperature source).

Because the temperature of the hot junction is higher than that of the cold junction, a certain amount of heat (denote it by Q_λ) will be conducted from the high-temperature source to the low-temperature source through the thermoelectrodes.

Thus, while the thermoelectric generator is in operation, the Peltier heat Q_1^{P} and the heat Q_λ transferred by conduction are rejected from the high-temperature source. At the same time, about half of the Joule heat, lost in the thermoelectrodes, is "returned" to the high-temperature source. Hence, the quantity of heat Q_1 rejected from the high-temperature source is equal to

$$Q_1 = Q_1^{\mathrm{P}} + Q_\lambda - \frac{1}{2} Q_{\mathrm{J}}. \tag{12.11}$$

The heat transferred to the low-temperature source includes the Peltier heat Q_2^{P}, the heat Q_λ conducted from the high-temperature source, and the second half of the Joule heat. Hence,

$$Q_2 = Q_2^{\mathrm{P}} + Q_\lambda + \frac{1}{2} Q_{\mathrm{J}}. \tag{12.12}$$

In accordance with the second law of thermodynamics, the useful work transferred from the thermoelectric generator to an external consumer amounts to:

$$L_{\mathrm{c}} = Q_1 - Q_2.$$

Substituting the values of Q_1 and Q_2 from Eq. (12.10) and (12.11), we obtain:

$$L_c = Q_1^P - Q_2^P - Q_J. \tag{12.13}$$

Substituting into Eq. (12.13) the values of Q_1^P and Q_2^P from Eqs. (12.6) and (12.7), we get:

$$L_c = \alpha(T_1 - T_2)I - Q_J,$$

which coincides with Eq. (12.10), as was to be expected.

It is clear that the amount of work transferred to the external consumer, L_c, can also be expressed in the following form:

$$L_c = I^2R, \tag{12.14}$$

where R is the resistance of the external consumer of the electric power produced by the thermoelectric generator.

In accordance with the general relationship (3.10),

$$\eta = \frac{L_c}{Q_1},$$

and taking into account Eqs. (12.11) and (12.14), we find the expression for the thermal efficiency of the cycle of a thermoelectric generator in the following form:

$$\eta = \frac{I^2R}{Q_1^P + Q_\lambda - \frac{1}{2}Q_J}. \tag{12.15}$$

If there were no irreversible losses in the thermoelectric generator (the Joule heat and heat lost due to conduction), its thermal efficiency would be equal to the thermal efficiency of a Carnot cycle. Indeed, assuming $Q_\lambda = 0$, $Q_J = 0$, we obtain from equations (12.10), (12.11) and (12.6):

$$L_c = \alpha(T_1 - T_2)I \tag{12.16}$$

and

$$Q_1 = \alpha T_1 I. \tag{12.17}$$

Substituting the values of L_c and Q_1 into Eq. (3.10),

$$\eta = L_c/Q_1,$$

we obtain:

$$\eta = \frac{T_1 - T_2}{T_1},$$

i.e. the equation for the thermal efficiency of a Carnot cycle.

To avoid misunderstandings it will be noted that in the absence of irreversible losses the thermal efficiency of a thermoelectric generator is equal to the thermal efficiency of a Carnot cycle at any temperature dependence of ΔE and not only when this dependence is linear [see formula (12.2)].

The amount of heat Q_λ transferred by heat conduction through the two thermoelectrodes is determined from the relation

$$Q_\lambda = \frac{\lambda_I\sigma_I + \lambda_{II}\sigma_{II}}{l}(T_1 - T_2), \tag{12.18}$$

where λ is the thermal conductivity of the material of the thermoelectrode, l the length of the thermoelectrode, σ the cross-sectional area of the thermoelectrode, and the subscripts "I" and "II" pertain to the two thermoelectrodes

of which the thermoelectric circuit is composed (the two thermoelectrodes are assumed to be of equal length).

The circuit of a thermoelectric generator is usually constructed not as shown in Fig. 12.2 but as illustrated in Fig. 12.3; the circuit is usually broken not at the middle of one of the thermoelectrodes, but at the cold junction (this is far more convenient from the designer's viewpoint).

The electrodes are usually joined at the hot and cold junctions with blocks (shaded in Fig. 12.3) made of electrical conductors, such as copper. Individual thermoelements may be connected to form a series or parallel circuit in the thermoelectric generator, depending on the nature of the external power consumer.

Fig. 12.3

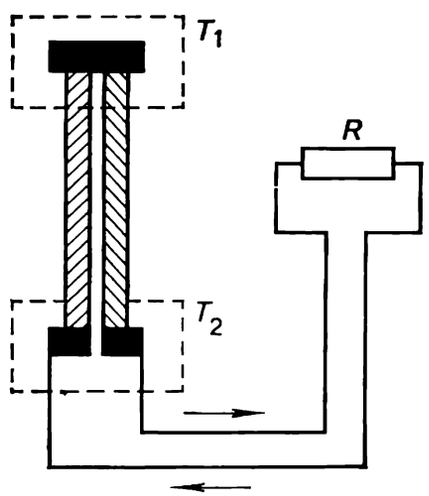

Denoting

$$\frac{\lambda_{\mathrm{I}}\sigma_{\mathrm{I}}+\lambda_{\mathrm{II}}\sigma_{\mathrm{II}}}{l}=\Lambda, \tag{12.19}$$

we find that Eq. (12.18) takes the following form:

$$Q_{\lambda}=\Lambda\,(T_1-T_2). \tag{12.20}$$

The quantity Q_{J} is determined by the expression

$$Q_{\mathrm{J}}=I^2r, \tag{12.21}$$

where r is the resistance of the thermoelectrodes.

The value of r can be calculated from the known relationship

$$r=\left(\frac{\rho_{\mathrm{I}}}{\sigma_{\mathrm{I}}}+\frac{\rho_{\mathrm{II}}}{\sigma_{\mathrm{II}}}\right)l, \tag{12.22}$$

where ρ is the resistivity (specific resistance) of the thermoelectrodes.

Let us denote the ratio of the external resistance R to the resistance of the thermoelectrodes r by ν:

$$\nu=\frac{R}{r}. \tag{12.23}$$

Substituting into Eq. (12.10) the values of Q_{J} and L_{c} from Eqs. (12.21) and (12.14), we obtain an expression that determines the current flowing

through the circuit of a thermoelectric generator:

$$I=\frac{\alpha(T_1-T_2)}{r+R}, \tag{12.24}$$

or, taking Eq. (12.33) into account, we get:

$$I=\frac{\alpha(T_1-T_2)}{r(1+\nu)}. \tag{12.25}$$

Substituting this expression for I into Eqs. (12.6), (12.14) and (12.21), we obtain:

$$Q_1^{\mathrm{P}}=\frac{\alpha^2 T_1(T_1-T_2)}{r(1+\nu)}, \tag{12.26}$$

$$L_{\mathrm{c}}=\frac{\alpha^2(T_1-T_2)^2\nu}{r(1+\nu)^2}, \tag{12.27}$$

$$Q_{\mathrm{J}}=\frac{\alpha^2(T_1-T_2)^2}{r(1+\nu)^2}. \tag{12.28}$$

Taking into account Eqs. (12.26), (12.27), (12.28) and (12.20), we can present Eq. (12.15) for the thermal efficiency of a thermoelectric generator in the following form:

$$\eta=\frac{\dfrac{\alpha^2(T_1-T_2)^2\nu}{r(1+\nu)^2}}{\dfrac{\alpha^2 T_1(T_1-T_2)}{r(1+\nu)}+\Lambda(T_1-T_2)-\dfrac{1}{2}\dfrac{\alpha^2(T_1-T_2)^2}{r(1+\nu)^2}}. \tag{12.29}$$

After simple transformations Eq. (12.29) reduces to

$$\eta=\frac{T_1-T_2}{T_1}\,\frac{1}{1+\dfrac{\Lambda r}{\alpha^2}\dfrac{(1+\nu)^2}{T_1\nu}+\dfrac{1}{2}\dfrac{T_1+T_2}{T_1\nu}}. \tag{12.29a}$$

As can be seen from Eq. (12.29a), the thermal efficiency of a thermoelectric generator depends on the temperatures T_1 and T_2, the quantity ν, and the properties of the thermoelectrode materials (the quantities Λ, r and α).

The ratio $(T_1-T_2)/T_1$ in the right-hand side of this equation is the thermal efficiency of a reversible Carnot cycle realized in the temperature interval from T_1 to T_2:

$$\eta^{\mathrm{r.C.c.}}=\frac{T_1-T_2}{T_1}.$$

It is clear that the second fraction in the right-hand side of Eq. (12.29a) is always smaller than one: this fraction accounts for the decrease of the thermal efficiency of a thermoelectric generator compared with the thermal efficiency of a Carnot cycle, due to the irreversible losses of heat as a result of conduction and Joule heat.

The quantity $\Lambda r/\alpha^2$ depends only on the properties of thermoelectrode materials and the shape of the thermoelectrodes.

Let us introduce the notation

$$z=\frac{\alpha^2}{\Lambda r}, \tag{12.30}$$

It is clear from Eq. (12.29a) that the thermal efficiency is higher the smaller the value of $\Lambda r/\alpha^2$ is, i.e. the greater is z.

In other words, thermal efficiency is higher the smaller the thermal conductivity and the electrical resistance of the thermoelectrodes, i.e. the smaller the irreversible losses due to conductivity and the release of Joule heat.*

Substituting into Eq. (12.30) the values of Λ and r from Eqs. (12.19) and (12.22), we obtain:

$$z=\frac{\alpha^2}{\lambda_{\mathrm{I}}\rho_{\mathrm{I}}+\lambda_{\mathrm{II}}\rho_{\mathrm{I}}\frac{\sigma_{\mathrm{II}}}{\sigma_{\mathrm{I}}}+\lambda_{\mathrm{I}}\rho_{\mathrm{II}}\frac{\sigma_{\mathrm{I}}}{\sigma_{\mathrm{II}}}+\lambda_{\mathrm{II}}\rho_{\mathrm{II}}}. \tag{12.31}$$

As can be seen from the above relationship, z depends not only on the physical characteristics of the thermoelectrode materials (α, λ_{I}, λ_{II}, ρ_{I}, and ρ_{II}) but also on the ratio of the cross-sectional areas of the thermoelectrodes, $\sigma_{\mathrm{I}}/\sigma_{\mathrm{II}}$. In order to determine the value of the ratio for which z is maximum (denote this value of z by z^*), it is necessary to differentiate Eq. (12.31) with respect to $\sigma_{\mathrm{I}}/\sigma_{\mathrm{II}}$ and equate the result with zero. After differentiating we obtain:

$$\frac{\sigma_{\mathrm{I}}}{\sigma_{\mathrm{II}}}=\sqrt{\frac{\rho_{\mathrm{I}}\lambda_{\mathrm{II}}}{\rho_{\mathrm{II}}\lambda_{\mathrm{I}}}}. \tag{12.32}$$

Consequently,

$$z^*=\left(\frac{\alpha}{\sqrt{\rho_{\mathrm{I}}\lambda_{\mathrm{I}}}+\sqrt{\rho_{\mathrm{II}}\lambda_{\mathrm{II}}}}\right)^2. \tag{12.33}$$

If $\rho_{\mathrm{I}}\cong\rho_{\mathrm{II}}$ and $\lambda_{\mathrm{I}}\cong\lambda_{\mathrm{II}}$, Eq. (12.33) reduces to

$$z^*=\frac{\alpha^2}{4\rho\lambda}. \tag{12.33a}$$

Similarly, to determine the optimal value of η, it is necessary to differentiate Eq. (12.29a) with respect to ν and to equate the result with zero. This calculation shows that the thermal efficiency of a thermoelectric generator is maximum for

$$\nu^*=\sqrt{z\,\frac{T_1+T_2}{2}+1}. \tag{12.34}$$

In accordance with Eq. (12.29a), the thermal efficiency is then equal to

$$\eta=\eta^{\mathrm{r.C.c.}}\frac{1}{1+\frac{2(1+\nu^*)}{zT_1}}. \tag{12.35}$$

Thus, replacing z by its value from Eq. (12.34), we obtain:

$$\eta=\eta^{\mathrm{r.C.c.}}\frac{\nu^*-1}{\nu^*+\frac{T_2}{T_1}}. \tag{12.35a}$$

If we ignore in Eq. (12.15) the quantity $\frac{1}{2}Q_{\mathrm{J}}$, because it is small compared to $(Q_1^{\mathrm{P}}+Q_\lambda)$, Eq. (12.35a) can be transformed to the following form:

$$\eta=\eta^{\mathrm{r.C.c.}}\frac{\tilde{\nu}^*-1}{\tilde{\nu}^*+1}, \tag{12.36}$$

* The use of the quantity z as the main quality characteristic of materials for thermoelectrodes was suggested by A. F. Ioffe.

where

$$\tilde{\nu}^* = \sqrt{1 + z^* T_1}. \tag{12.37}$$

Equation (12.36) gives only an approximate value of the thermal efficiency η, the difference between this value of thermal efficiency and that given by Eq. (12.35a) being smaller, the lower the thermal efficiency proper. Equations (12.36) and (12.37) are sometimes more handy for estimating calculations, inasmuch as $\tilde{\nu}^*$ depends only on temperature T_1.

On the basis of Eq. (12.35a), the thermal efficiency of a thermoelectric

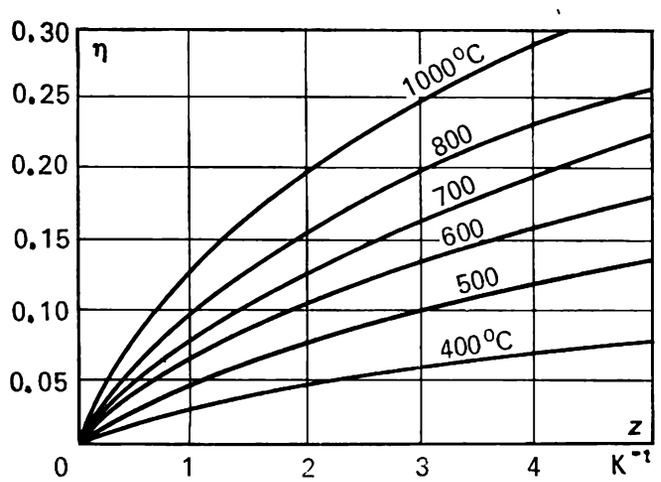

Fig. 12.4

generator is plotted in Fig. 12.4 as a function of z at different values of T_1 and with $T_2 = 300$ K.

The possibilities for creating effective thermoelectric generators depend on the availability of materials with a high value of z for the thermoelectrodes. It is also essential that these materials be stable at high temperatures.

We must note here that pure metals and metal alloys have low values of z. For instance, for a metal with $\alpha = 40\mu V/K$, $\rho = 0.5 \times 10^{-6}$ ohm-m and $\lambda = 10$ W/(cm-K) (these orders of magnitude are characteristic for a number of metals) we find from Eq. (12.33a) that $z = 8 \times 10^{-5}$ K^{-1}; with such values of z the thermal efficiency of a thermoelectric generator does not exceed one hundredth of one per cent.

Semiconductors feature a considerably greater z. Now chiefly tellurium-base semiconductor materials are used to make thermoelectrodes for thermoelectric generators; of the greatest interest among the tellurium-base materials are Bi_2Te_3 and PbTe. For Bi_2Te_3 the value of z varies from approximately 3×10^{-3} K to 1×10^{-3} K^{-1} with a temperature increase from 200 to 700 °C, and for PbTe from approximately 2×10^{-3} to 0.5×10^{-3} K^{-1} with a temperature increase from 200 to 700 °C. Unfortunately, these semiconductors have a low resistance to heat: the melting point of Bi_2Te_3 is 584 °C, and that of PbTe is 922 °C. This restricts the temperature interval in which these semiconductor materials can be used. At higher temperatures semiconductor electrodes made of oxides (such as Cr_2O_3, for which $z = 1.35 \times 10^{-4}$ K^{-1}; Cr_2O_3 + 1% of NiO, $z = 5.3 \times 10^{-4}$ K^{-1}; Cr_2O_3 + 5% of NiO, $z = 1.4 \times 10^{-4}$ K^{-1}) and silicides (such as $MnSi_2$ for which $z = 0.7 \times 10^{-3}$ K^{-1}; $CrSi_2$, $z = 0.6 \times 10^{-4}$ K^{-1}; $MoSi_2$, $z = 4 \times 10^{-5}$ K^{-1})

are used. Presently silicides are considered the most promising of all the high-temperature materials used for thermoelectrodes. Even though their value of z is not too high, the thermal efficiency of thermoelectric generators fitted with thermoelectrodes made from these materials reaches rather high values, because the hot junction can be kept at higher temperatures. Thus, for instance, at $T_2 = 300$ K for $MnSi_2$ the hot junction temperature may reach $T_1 = 1300$ K, with the thermal efficiency $\eta = 9.7\%$; for the semiconductor $CrSi_2$ we have $T_1 = 1300$ K and $\eta = 1.4\%$; and for $MoSi_2$ the temperature $T_1 = 1500$ K and $\eta = 1.2\%$.

Apparently boride- and carbide-base high-temperature thermoelectrode materials will be still more applicable. It may be assumed that these materials will permit thermoelectric generators to be created with thermal efficiencies ranging from 15 to 20%. At the present time, however, these semiconductors have been rather insufficiently investigated.

Notwithstanding their comparatively low thermal efficiency, thermoelectric generators are already recognized as very convenient direct-energy conversion systems, due to their simple and compact construction and the absence of moving parts. When thermoelectrode materials with a high z are found, thermoelectric generators will no doubt be widely used as convenient self-contained electric power sources. We must especially emphasize the expediency of using thermoelectric generators along with heat sources of a comparatively low temperature potential, in comparison to which the efficiency of the conventional vapour power cycle is comparatively small.

That this treatment of the heat power cycle does not refer to the T-s diagram nor mention the processes that the working medium undergoes in the cycle may cause some bewilderment. Furthermore, it is not clear what the working medium of a thermoelectric generator is. In this respect, it ought to be mentioned that the thermoelectric generator, like the thermionic converter, considered in the next section, occupies a special place among heat engines. In fact, the working medium of a thermoelectric generator is the electron flow (electron gas) moving in the thermoelectric circuit. It is the electron flow that assists in the conversion of the fraction of heat rejected from the high-temperature source into electrical energy.

12.2 The cycle of a thermionic converter

The main reason for the low thermal efficiency of thermoelectric generators consists in the irreversibility of the process of heat transfer from the high-temperature source to the low-temperature source by means of conduction through the thermoelectrodes. As was already mentioned, all attempts to considerably reduce the amount of heat Q_λ involved in the heat transfer, i.e. to raise the magnitude of z, have so far failed. In this connection, thermionic converters can be regarded as a kind of thermoelectric generators in which the hot and cold "junctions" are separated by a vacuum preventing the transfer of heat by way of conduction. The electric current is maintained in the circuit of the converter by electron emission.

The operational principle of a thermionic converter is based on the ability of heated metals to emit electrons from their surface.

As is known from elementary physics, any metal has free electrons whose emission from the surface of the metal is opposed by a potential barrier

equal to the difference between the energies of an electron outside and inside the metal. In order to overcome this barrier and conduct the electron from the metal into the surroundings, a certain amount of work must be spent, referred to as the *work function*. The electron work function differs for different substances: the magnitude of the work function is rather high, ranging from one to several electron-volts.

As a result of electron emission the density of the electrons outside the metal increases causing the flow of an electric current.

The schematic diagram of a thermionic converter is shown in Fig. 12.5. The metal surfaces *1* and *2* are separated by a vacuum. The temperature of

Fig. 12.5

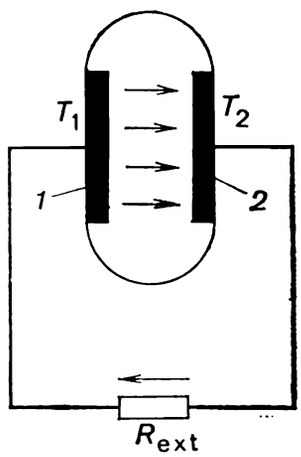

Fig. 12.6

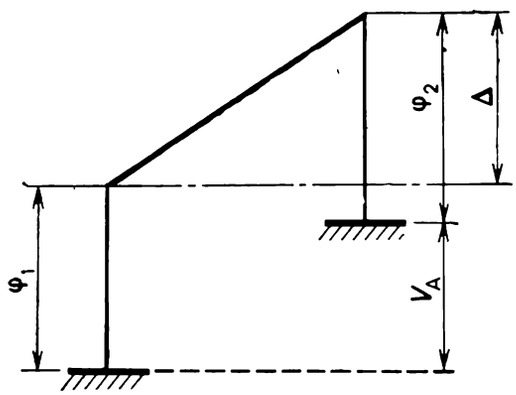

surface *1* is T_1 and the temperature of surface *2* is T_2, with T_1 being considerably higher than T_2. Let us denote the work function for surface *1* by φ_1, and the work function for surface *2* by φ_2. As a result of electron emission from surface *1* (which proceeds at an intensity much greater than the intensity of emission from surface *2*, because $T_2 < T_1$) more electrons will escape from surface *1* to surface *2* than from surface *2* to surface *1*. Therefore, surface *2* will be negatively charged and a potential difference will appear between the two plates. If an electric circuit is created by completing the circuit by an external resistance, an electric current will appear.

The emission of electrons can be regarded as the "evaporation" of electrons from the surface of an emitter, due to the addition of heat to the emitter, and the accumulation of electrons on surface *2* can be regarded as "condensation" of electrons (condensation is accompanied by a release of heat).

Let us investigate in greater detail the regularities of the processes in the thermionic converter.

Emission from the surface of a metal results in a continuous escape of electrons, i.e. an emission current occurs. The density of the maximum emission current j is determined by *Richardson's equation*, according to which

$$j = BT^2 e^{-\varphi/kT}, \tag{12.38}$$

where φ is the electron work function, B is a constant equal to 120 A/(cm^2-K^2), and k is Boltzmann's constant. For various materials the work function φ varies from 1 to 5 eV.

If the electrons emitted from surface *1* are freely scattered in the vacuum to which this plate is exposed, then, in accordance with Richardson's equa-

tion, the emission current density will be equal to

$$j_1 = BT_1^2 e^{-\varphi_1/kT_1}. \tag{12.38a}$$

But if the electrons escaping from surface *1* accumulate on surface *2**, the problem becomes somewhat more complicated.

As surface *2* becomes more and more negatively charged, it becomes more difficult for the electrons emitted from surface *1* to reach surface *2*, since, in addition to the work function φ_1, the electrons have to overcome a space-charge barrier due to the potential difference between the plates. Let us denote this potential difference by V_A.

The distribution of the electrical potentials between the two plates is shown schematically in Fig. 12.6. It can be seen from this illustration that the electrons emitted from surface *1* have to overcome a space-charge barrier equal not to φ_1 (as in the case of emission into a vacuum) but to $(\varphi_2 + V_A)$. For this purpose the electrons must possess a greater kinetic energy than for overcoming the space-charge barrier φ_1. Inasmuch as the emitted electrons have a different velocity and, consequently, possess different kinetic energies (although on the average the kinetic energy of free electrons is directly proportional to the emitter's temperature T_1), with an increase of the "height" of the space-charge barrier the fraction of the electrons capable of surmounting this barrier diminishes, creating a smaller density of the emission current compared with the current density with emission into a "free", or evacuated, space. Indeed, for a space-charge barrier $(\varphi_2 + V_A)$, the density j_1 of the current flowing from surface *1* to surface *2* (from the cathode to the anode) will clearly be determined by a relationship similar to Eq. (12.38):

$$j_C = BT_1^2 e^{-\frac{\varphi_2 + V_A}{kT_1}} \tag{12.39}$$

(the subscript "C" pertains to the cathode).

This expression can be presented in the following form:

$$j_C = BT_1^2 e^{-\frac{\varphi_1}{kT_1}} e^{-\frac{\Delta}{kT_1}}; \tag{12.39a}$$

where $\Delta = [(\varphi_2 + V_A) - \varphi_1]$ is the additional space-charge barrier for the electrons emitted from surface *1* in a thermionic converter (the meaning of this space-charge barrier is clear from Fig. 12.6). Inasmuch as $\Delta > 0$, it follows that the magnitude of $e^{-\frac{\Delta}{kT_1}} < 1$ indicates what fraction of the electrons which overcame the barrier φ_1 will reach surface *2*. If the anode and cathode are made from one material, then $\varphi_1 = \varphi_2$ and, consequently, the additional space-charge barrier will then be equal to $\Delta = V_A$. It follows that j_C is always smaller than j_1.

It should be noted that along with an emission current from surface *1* to surface *2* (with a density of j_C) there exists in a thermionic converter an opposite current of a density j_A (from the anode to the cathode), due to the emission of electrons from surface *2* (the anode). The density of this current is determined from Richardson's equation

$$j_A = BT_2^2 e^{-\frac{\varphi_2}{kT_2}}. \tag{12.40}$$

* The warmer and colder plates of a thermionic converter are also called the cathode and anode, respectively.

It is clear from Fig. 12.6 that the electrons emitted by the anode have to overcome a space-charge barrier equal only to φ_2.

Inasmuch as the density of the electron current in the vacuum between the anode and cathode is very low, the opposite currents j and j_A fail to equalize each other. As regards the current in the electric circuit to which the thermionic converter is connected, in accordance with the law for a direct-current electric circuit (Kirchhoff's law), the resulting current density is equal to the difference between the opposite currents, i.e.

$$j = BT_1^2 e^{-\frac{\varphi_2 + V_A}{kT_1}} - BT_2^2 e^{-\frac{\varphi_2}{kT_2}}. \tag{12.41}$$

Fig. 12.7

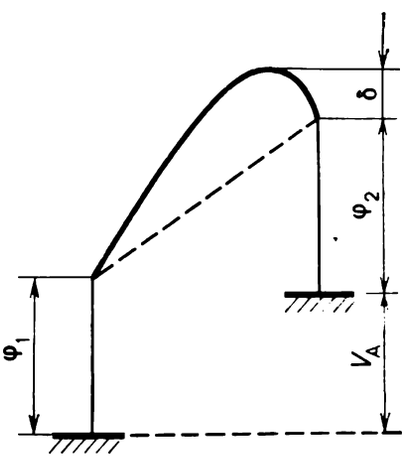

Denoting the area of the anode and cathode by Σ, we find that the intensity of the current in the circuit of a thermionic converter will be

$$I = j\Sigma, \tag{12.42}$$

and the converter's output, i.e. the electric power consumed by the external resistance, is

$$N = IV_A. \tag{12.43}$$

In real thermionic converters the distribution of potentials in the vacuum between the anode and cathode is far from the linear distribution presented in Fig. 12.6, due to the appearance of a negative space charge created by the electron cloud present in the vacuum. In the presence of a space charge the potential distribution is as illustrated in Fig. 12.7. The magnitude of the space-charge barrier increases still more (by the value denoted in Fig. 12.7 by δ). This, naturally, leads to a smaller current density j.

The space charge significantly diminishes the effectiveness of thermionic converters. Therefore, one of the main problems in their creation is to reduce the space charge in all possible ways. This can be achieved either by reducing the size of the gap between the anode and cathode (in experimental equipment this clearance is sometimes diminished to 0.1 mm, which, however, creates assembly and operation difficulties) or by changing the layout of the converter (the creation of a so-called *thermionic converter* in which the space charge is compensated for by introducing positive cesium ions). It should be emphasized that effective methods of suppressing the space charge have not yet been elaborated.

It is clear from Eq. (12.39) that the smaller the magnitude of V_A, i.e. the smaller the voltage across the current terminals of a thermionic converter, the higher the current in the circuit of the converter. This can easily be explained physically: the smaller the V_a, the smaller the "height" of the potential (space-charge) barrier and the greater the number of electrons capable of overcoming this barrier and escaping from the cathode to the anode.

With an increasing V_A, the resulting current j diminishes and at a certain magnitude of V_A the current becomes equal to zero. The value of V_A for $j = 0$ can be interpreted as the *electromotive force of a thermionic converter*. Denote this value by E. It is clear that V_A does not exceed E, $V_A \leqslant E$, the inequality sign corresponding to the presence of a current in the converter circuit, i.e. to work transfer to the external consumer, and the equality sign indicating the absence of current in the circuit.

The value of E can be found from Eq. (12.41). Assuming $j = 0$ in the equation and taking logarithms, we find that

$$E = 2kT_1 \ln \frac{T_1}{T_2} + \varphi_2 \left(\frac{T_1}{T_2} - 1\right). \tag{12.44}$$

As was already mentioned, a certain analogy can be drawn between a thermionic converter and a thermoelectric generator*. Let us represent the expression for the electromotive force of a thermionic converter in the form resembling Eq. (12.2) (Seebeck's law):

$$E = \varepsilon (T_1 - T_2), \tag{12.45}$$

where ε is a constant similar to the thermoelectric power α in Eq. (12.2).

To find the value of ε we must differentiate the expression for E with respect to temperature [see Eq. (12.44)]. Assuming T_2 to be constant and T_1 variable, and differentiating Eq. (12.44), we obtain:

$$\varepsilon = \frac{dE}{dT} = 2k \left(\ln \frac{T_1}{T_2} + 1\right) + \frac{\varphi_2}{T_2}. \tag{12.46}$$

If the difference between the temperatures T_1 and T_2 is not too great, i.e. $T_1 \cong T_2$, then $\ln (T_1/T_2) \cong 0$ and Eq. (12.46) takes the following form:

$$\varepsilon = 2k + \frac{\varphi_2}{T_1}. \tag{12.47}$$

Let us estimate the order of magnitude for ε. Boltzmann's constant $k = 8.62 \times 10^{-5}$ eV/K, the work function φ_2 usually amounts to 1 to 2 eV, and T_2 is about 1000 K. Hence, $\varepsilon = 10^{-3}$ eV/K $\cong 10^3$ μV/K, which is in the order of magnitude of the best thermocouples.

The thermal efficiency of a thermionic converter is calculated from the ordinary expression

$$\eta = \frac{L}{Q_1},$$

* The anode, cathode and the vacuum separating them can be considered as one thermoelectrode, and the remaining circuit of the thermionic converter as the other thermoelectrode; these two thermoelectrodes form the thermoelectric circuit. Inasmuch as the junctions of the thermoelectric circuit are at different temperatures, a thermoelectromotive force appears in the circuit; this can be accounted for by introducing one more term into Eq. (12.46), the thermoelectric power α. Its influence is not great, but in precise calculations α should not be ignored.

where L is the electric power transmitted to an external consumer and Q_1 is the heat transferred from a high-temperature source to the cathode.

If L is replaced in the above expression for the thermal efficiency by the output of the thermionic converter determined from Eq. (12.41), then Q_1 should mean the quantity of heat transferred to the cathode per unit time.

The quantity Q_1 is the sum of the following quantities: heat Q_1^j, spent to ensure the emission of electrons from the surface of the cathode (i.e. for the evaporation of electrons); heat Q_{rad}, transferred by radiation from the cathode to the anode (since the cathode temperature T_1 is always greater than the temperature of the anode T_2).*

Having calculated the values of I, V_A, Q_1^j and Q_{rad}, we can calculate the thermal efficiency of a thermionic converter.

The problem of the thermal efficiency of thermionic converters can also be approached by making use of z, introduced in Sec. 12.1 for thermoelectric generators, characterizing the properties of thermoelectrode materials.

It can be shown without intricate calculations that the expression for the thermal efficiency of a thermionic converter can be given in the following form:

$$\eta = \eta^{\text{r.c.c.}} \frac{\sqrt{1+z^*T_1}-1}{\sqrt{1+z^*T_1}+1}; \tag{12.48}$$

in the outward appearance this expression coincides with the approximate Eq. (12.36) for the thermal efficiency of a thermoelectric generator, the difference consisting in what is meant by z^*. The value of z^* for a thermoelectric generator is determined by Eq. (12.33). But as applied to the thermionic converter the quantity z^*, characterizing the properties of materials used to make the anode and cathode, is expressed as follows:

$$z^* = \frac{\varepsilon^2}{2k^2T_1 + 4k\Sigma\sigma T_1^4/j_0}, \tag{12.49}$$

where ε is the thermionic analogue of α determined by Eq. (12.45), k is Boltzmann's constant, Σ the area of the cathode, j_0 the current density determined by Eq. (12.39), corresponding to $V_A = 0$ (i.e. the maximum possible emission current from the cathode to the anode at the given temperature), and σ is the Stefan-Boltzmann constant in the temperature dependence of the total energy emitted in the form of heat radiation per unit time from unit area of a black body (Stefan-Boltzmann's law); $\sigma = 5.67 \times 10^{-8}$ W/(m^2-K^4).

The quantity z for the materials used in thermionic converters is approximately of the same order of magnitude as the z for the best semiconductor thermocouples. In Fig. 12.8, the temperature dependence of z is plotted for the metallic compound PbTe, already mentioned in Sec. 12.1 as one of the best thermoelectrode materials for temperatures up to 1000 K, and for activated tungsten used as the cathode of a thermoelectric generator at temperatures above 1000 K. As this graph shows, the value of z for activated tungsten used in a thermionic converter is higher than that for PbTe in a thermoelectric generator. It can also be shown that, in accordance with

* Instead of conduction losses of heat in thermoelectric generators, in a thermionic converter the main losses of heat (irreversible heat transfer from the high-temperature source to the low-temperature source) are due to thermal radiation.

Eq. (12.49), z increases noticeably with rising temperature due to the rapid increase of j_0 with temperature [see Eq. (12.41)].

Thermionic converters have recently drawn great attention of scientists, due to the development and elaboration of high-temperature nuclear reactors.

Fig. 12.8

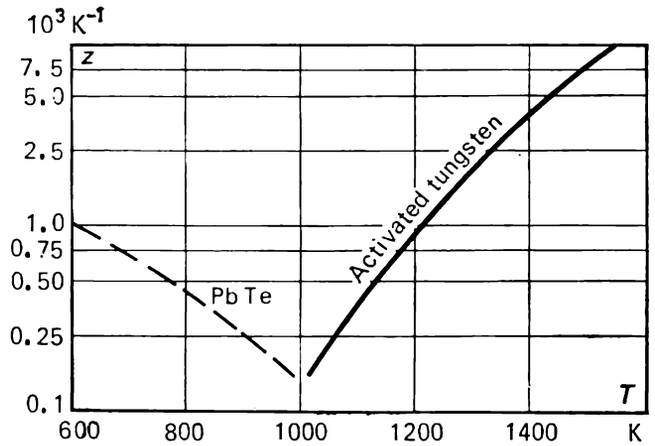

Fig. 12.9

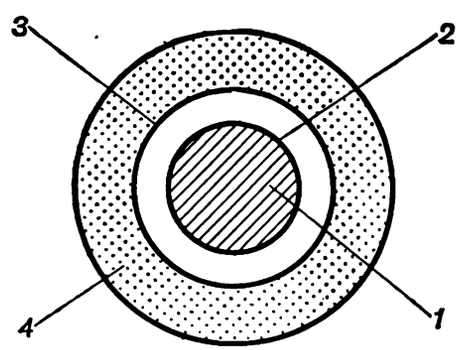

In fact, the fuel elements of nuclear reactors may be the most suitable high-temperature heat sources for thermionic converters. The schematic diagram of a thermionic converter assembled from fuel elements of a nuclear reactor is depicted in Fig. 12.9. The fuel element *1* containing the fissionable material carries the cathode *2* of the thermionic converter. The cathode is surrounded by the anode *3* separated from the cathode by a space filled with cesium vapour. The anode is cooled on the outside by a heat carrier flowing through the annular gap *4*. Inasmuch as the rate of emission grows very rapidly with temperature, there is no need in making the difference $(T_1 - T_2)$ very great: if the temperature of the anode, T_2, is as much as 200 °C smaller than the temperature of the cathode, T_1, then the current j_A is negligible which permits the temperature of the anode to be maintained at a sufficiently high level. The heat-transfer agent circulating in annular gap *4*, thereby, transfers heat of a sufficiently high temperature potential, which in turn can be converted into work (for instance, in the cycle of a thermopower plant equipped with steam turbines).

The creation of thermionic converters involvels great technical difficulties. However, there are reasons to expect a considerable progress in the creation of thermionic converters, which, along with thermoelectric generators, are convenient self-contained sources of energy.

12.3 MHD-generator cycle

In the last few years intensive work has been carried out in many countries on the creation of thermopower plants fitted with magnetohydrodynamic (MHD) generators.

As was already mentioned, the classification of MHD generators as direct-energy conversion systems is to a certain extent conditional. In fact, the heat released upon fuel combustion is expanded in the MHD generators to heat the working medium, which expands in a nozzle and acquires a considerable kinetic energy. Only then is this kinetic energy converted in the duct of an MHD generator into electric power. In thermoelectric generators

Fig. 12.10

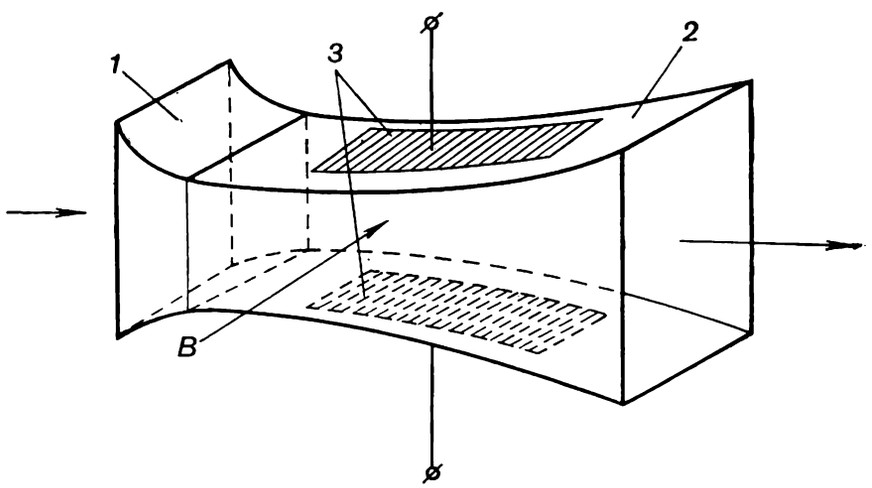

and thermionic converters there are no intermediate stages for heating and accelerating the working medium. It would therefore be more correct to refer to magnetohydrodynamic generators as devices for machineless conversion of heat into electric power, thereby emphasizing the fact that, unlike conventional turbine-generators, magnetohydrodynamic generators have no moving parts. This is an essential advantage of magnetohydrodynamic generator, ensuring greater effectiveness, as will be shown below.

Figure 12.10 shows the schematic diagram of a magnetohydrodynamic generator which operates as follows. A gas serving as the working medium is heated with a small amount of an easily ionized agent (alkaline metals, such as potassium and cesium), by the heat transferred from a high-temperature source to temperatures so high that it partly ionizes, i.e. passes into a plasma state, in which the working medium is a mixture of free electrons, ions and electrically neutral atoms, i.e. medium capable of conducting electricity*. The gas then expands in nozzle *1*, acquires a rather high velocity (approximately 1000 m/s), and enters duct *2* of the magnetohydrodynamic generator. The duct is arranged in a transverse magnetic field (created by a special magnetic system) whose magnetic lines are perpendicular to the duct's axis. We know from electrodynamics that when a conductor crosses

* A thermodynamic analysis of the process of ionization is given below. The electric conductivity of the gas in the duct of the MHD generator is usually about $\gamma \cong 0.1$ ohm-cm^{-1}.

the lines of a magnetic field, an electromotive force is induced in this conductor (for instance, in a conventional electric generator, an electromotive force is induced in the winding of the rotor as the conductors of the winding cross the lines of the magnetic field formed by the electromagnet of the stator). Since the partially ionized gas is a medium conducting electricity, as the gas moves in the magnetic field an e.m.f. and an electric current appear in the medium. The current flows perpendicular to the plane passing through the vectors of gas velocity and magnetic field density. Thus, the electric power generated in the effective volume of the MHD generator is tapped by electrodes *3* connected to the power consumer.

The specific power of a MHD generator is proportional to γw^2, where γ is the conductivity of the working medium, and w represents the velocity of the working medium in the duct of the MHD generator.

The generator shown schematically in Fig. 12.10 is a line-conduction MHD generator. Several other types of generators such as induction a.c. generators also exist. However, differences in the layouts and design of the MHD generators, which differ in many ways from the approximate schematic diagram in Fig. 12.10, are thermodynamically immaterial.

In a MHD generator the energy of plasma moving through the generator duct is converted into electric power (just as the kinetic energy of the rotating rotor is converted into electric power in a turbine-generator). For example, in the simplest MHD generator which expands adiabatically from state *1* into state *2*, the working medium produces an amount of electric energy, tapped from the generator terminals, usually equal to the difference between the enthalpies of the working medium, i.e.

$$l_g = i_1 - i_2, \tag{12.50}$$

where l_g is the work performed in the MHD generator.

Compared with gas-turbine and steam-turbine plants, the main advantage of a MHD generator is its more effective utilization of heat of a high temperature potential, released upon combustion of fuel (chemical or nuclear). In fact, the MHD generator's lack of moving parts, such as turbine blades, which undergo great mechanical as well as thermal stresses, permits a sharp increase of the temperature of the gas used as the working medium. The temperature of the gas at the inlet of a MHD generator operated by the products of combustion of fossil fuels may reach 2600 °C, compared with 650 °C in steam- and 770-800 °C in gas-turbine plants. Thus, the upper temperature of the working medium used in a MHD generator corresponds to that of the high-temperature source of heat; as a result there is a sharp decrease in the losses due to the irreversibility of the process of heat transfer from the high-temperature source to the working medium and a considerable rise in the thermal efficiency of the thermopower plant. If we also take into account that with MHD generators there are virtually no restrictions to the concentration of high power ratings in one unit (a detailed analysis shows that the efficiency of a generator increases with an increase in its power rating), it becomes clear that MHD generators have much potential in high-power electric stations.

Thermopower plants fitted with MHD generator can be operated on an open or closed cycle.

The schematic diagram of an open-cycle MHD plant is shown in Fig. 12.11. Atmospheric air is compressed in compressor *1* to the pressure p_1 and deli-

vered along with fuel into combustion chamber *2*. In the combustion chamber fuel is burned at a constant pressure, p_1 = const. From the combustion chamber the hot products of fuel combustion pass into the MHD generator *3*, while upstream the ionizing addition mentioned above is introduced into the flowing working medium. In the MHD generator the working medium (the ionized products of combustion) expands adiabatically from a pressure p_1 and temperature T_1 at the inlet to a pressure p_2 and temperature T_2 at the outlet (exhaust), performing mechanical work (producing electric power). The products of combustion, leaving the MHD generator at a temperature exceeding 2000 °C, flow into a regenerative heat exchanger, the air preheater *4*, where the products cool heating the air delivered into the combustion cham-

Fig. 12.11

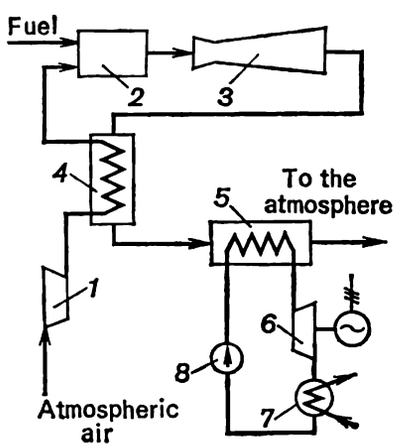

Fig. 12.12

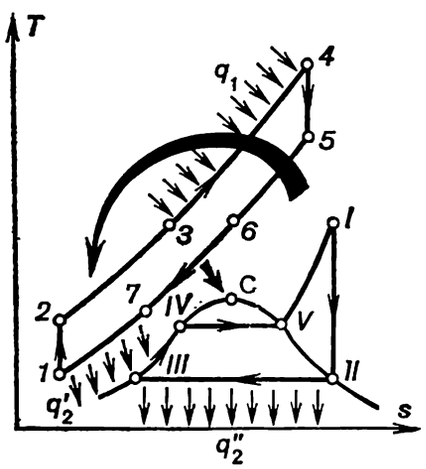

ber. The temperature of the products of combustion leaving the air heater is still high. Naturally, it is necesarry to use the heat of a high temperature potential effectively. One way is to use a second (lower) heat power cycle—a vapour power cycle. The hot combustion products leaving the air heater flow into steam generator *5* where their heat is transferred to the water circulating in the steam-generating circuit of the boiler. The steam obtained in this generator flows to steam turbine *6* where it expands and produces work. The exhaust steam then condenses in condenser *7* from which pump *8* delivers the condensate to steam generator *5* for feedwater.

The products of combustion cool in steam generator *5* to approximately 150 °C, and from the boiler they are discharged into the atmosphere.

A thermopower plant constructed according to this layout is essentially a modification of the binary vapour plant discussed in Sec. 11.6 (the only difference is that instead of the upper Rankine mercury cycle a MHD cycle is practised with partial heat utilization for regeneration purposes).

The open cycle of a MHD plant is shown on the *T-s* diagram in Fig. 12.12. Here *1-2-3-4-5-6-7-1* represents the MHD stage of the cycle, and *I-II-III-IV-V-I* represents the vapour stage of the cycle. On the diagram the line *1-2* represents the process of adiabatic compression in the compressor* from pressure p_2 to pressure p_1; line *2-3-4* is the isobar of heat addition during

* Actually, compression in the compressor is polytropic. Sometimes two- and three-stage air compression is practised with intermediate water cooling. Figure 12.12 shows adiabatic one-stage compression.

the cycle, p_1 = const (here line *2-3* represents heat addition in the regenerative air heater, and line *3-4*, heat addition in the combustion chamber); line *4-5* represents the adiabatic process of work performance in the MHD generator; line *5-6-7-1* represents the isobaric (p_2 = const) process of heat rejection in the cycle; line *5-6* pertains to heat transfer to the air in the regenerative air heater *4*; line *6-7* represents the transfer heat to the water in steam generator *5*; and line *7-1* represents the process of heat transfer to the low-temperature source (with the products of combustion discharged into the atmosphere).

In the lower stage of the cycle line *I-II* represents adiabatic expansion of steam with external work transfer in the turbine; line *II-III* is the isobaric (p_{II} = const) process of heat rejection in the condenser; and line *III-IV-V-I* represents the process of isobaric (p_I = const) heat addition in the steam generator.

Just as with the mercury-water binary cycle, the cycles *1-2-3-4-5-6-7-1* and *I-II-III-IV-V-I* are plotted on the diagram for different quantities of the working medium, the vapour cycle for 1 kg of water and the MHD cycle proper for m kg of the working medium; the ratio of rate of working-medium flow in the vapour cycle to the rate of water flow, m, is determined as follows.

In the lower stage of the cycle the working medium is heated with heat rejected along section *6-7* of the isobar p_2 = const of the upper stage of the binary cycle. Hence, we find that

$$m(i_6 - i_7) = i_I - i_{III}; \tag{12.51}$$

the subscripts in Eq. (12.51) correspond to the states on the *T-s* diagram shown in Fig. 12.12. Here m is the ratio of the rate of flow of the working medium in the MHD cycle proper (upper stage of the cycle) to the rate of water flow (the lower stage of the cycle). From this it follows that

$$m = \frac{i_I - i_{III}}{i_6 - i_7}, \tag{12.51a}$$

or, more exactly,

$$m = \frac{i_I - i_{III}}{i_6 - i_7} \frac{1}{\eta_{s.g.}}, \tag{12.51b}$$

where $\eta_{s.g.}$ is the efficiency of steam generator *5* allowing for the inevitable losses in this heat exchanger.

The thermal efficiency of this cycle is determined from a relationship similar to Eq. (11.127) derived for the thermal efficiency of a binary vapour cycle:

$$\eta^{MHDp} = \frac{m l^{MHD} l^{w}}{m q_1}, \tag{12.52}$$

where l^{MHD} and l^{w} is the work performed in the MHD cycle and in the steam-turbine cycle, respectively, and q_1 is the heat added to 1 kg of the working medium of the MHD cycle.

Applied to the open cycle plotted on the *T-s* diagram in Fig. 12.12, Eq. (12.52) takes the following form:

$$\eta^{MHDp}_{open} = \frac{m(i_4 - i_5 - i_2 + i_1) + (i_I - i_{II})}{m(i_4 - i_3)}; \tag{12.53}$$

the subscripts corresponding to the states on the *T-s* diagram in Fig. 12.12.

One might ask why we do not consider the working medium of the MHD cycle to be an ideal gas with a constant heat capacity, as was assumed in gas-power cycles. The fact is that at the temperatures prevailing in the effective volume of MHD power plant (up to 2600 °C), intensive dissociation of the products of combustion takes place, resulting in (as will be shown in Chapter 15) an appreciable change in their heat capacity with temperature. Therefore, the assumption that during the isobaric heating process in the combustion chamber of a MHD plant heat capacity c_p is constant may lead to significant calculation errors. The closed-cycle MHD plants considered below, in which inert gases (argon, helium) are used as working media, are different; inasmuch as inert gases are in an atomic state, they may be considered as a first approximation to be ideal gases with a constant heat capacity in the MHD cycle as well.

As can be seen on the T-s diagram in Fig. 12.12, the upper part of the open cycle of a MHD plant is similar to the cycle of a gas-turbine plant with constant-pressure combustion, p = const, regeneration and adiabatic air compression, considered in Sec. 10.2.

The following working medium parameters are usually assumed for open-cycle MHD power plants: the upper cycle pressure is approximately the same as in gas-turbine cycles, p_1 ranges from approximately 300 to 500 kPa (i.e. from 3 to 5 kgf/cm²); the pressure downstream from the nozzle in the duct of a MHD generator is usually set equal to atmospheric pressure, p_2 = 98 kPa (1 kgf/cm²) (helpful from a purely practical viewpoint); the air handled in the compressor is drawn from the surroundings at a temperature T = 20 °C; air temperature at the compressor exit is determined by the values of p_1, p_2 and T_1; air preheating temperature $T_3 \cong$ 1500-2000 °C*; the temperature in the combustion chamber of a MHD plant is considerably higher than the temperature in the furnace of a steam boiler, $T_4 \cong$ 2500-2600 °C (such a high temperature being ensured by preheating air in a regenerative air heater); $T_5 \cong$ 2100-2200 °C, which is determined directly by the values of p_1, p_2 and T_4; $T_6 \cong$ 1700-1800 °C, which is determined by the degree of regenerative air heating; and the temperature of the gases leaving the steam generator $T_7 \cong$ 150 °C.

An analysis shows that with the upper stage of a cycle realized at these parameters it is expedient to select for the lower (vapour) stage of the cycle the following parameters: p_{I} = 24 500 kPa (250 kgf/cm²), T_{I} = 570 °C, p_{II} = 4 kPa (0.04 kgf/cm²). These parameters are standard for large steam power plants.

For these parameters of the working medium the thermal efficiency of a MHD cycle, calculated from Eq. (12.53), is about 0.7, with plant efficiency η_b^p exceeding 0.50 (up to 0.55). This efficiency is higher than the corresponding efficiency of the best existing steam-turbine and gas-turbine power plants.

Figure 12.13 shows the design of a closed-cycle MHD plant. Unlike the open-cycle MHD plant, the working medium undergoes no change in the circuit. This permits the working medium to be any gas, with the appropriate physical properties, and not only air and the products of combustion,

* Due to the technical difficulties involved in heating air to such high temperatures, in experimental MHD installations air is presently heated to 1200-1500 °C, ensuring the temperatures required in the combustion chambers by enriching the heated air with oxygen.

which make up the working medium in open-cycle installations. A closed-cycle MHD plant can incorporate a nuclear reactor as a high-temperature source. The schematic diagram of a closed-cycle MHD installation with a nuclear reactor is shown in Fig. 12-13.

The working medium, compressed in compressor *1* from pressure p_2 to pressure p_1, is delivered into nuclear reactor *2* where it is heated from temperature T_2 to temperature T_3. The working medium then passes into MHD generator *3* in which it produces work, expanding from pressure p_1 to pressure p_2. Further, just as in an open-cycle outfit, the working medium flows into steam generator *4* where heat is transferred to water, the working

Fig. 12.13

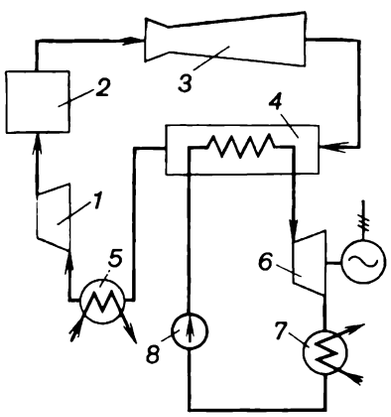

Fig. 12.14

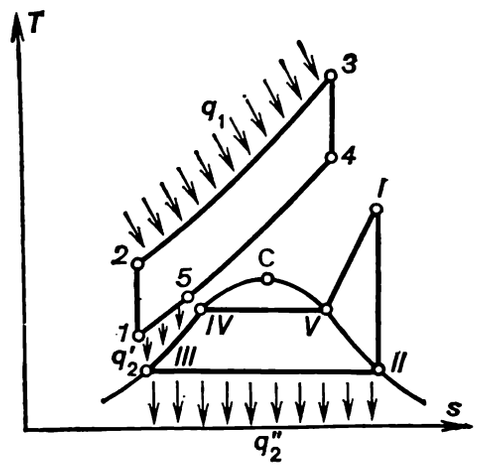

medium circulating in the steam-generating circuit. Since the temperature of the gases leaving the steam generator is rather high and they cannot be delivered directly into the compressor, these gases are additionally cooled in water-cooled heat exchangers. The elements of the steam-generating circuit depicted schematically in Fig. 12.13 are the same as in Fig. 12.11 (turbogenerator *6*, condenser *7*, and pump *8*).

The cycle realized in a closed-cycle MHD power plant is shown on a *T-s* diagram in Fig. 12.14.

The notations used in the lower steam-generating stage of the closed cycle are the same as those used in Fig. 12.12. For the upper stage of the cycle, line *1-2* represents adiabatic compression in the compressor; line *2-3* the isobaric process (p_1 = const) of heat addition; line *3-4* represents adiabatic expansion with heat transfer in the MHD generator; line *4-5-1* shows the isobaric (p_2 = const) process of heat rejection (*4-5* represents heat transfer to the steam-generating circuit and line *5-1* represents heat transfer in the water-cooled heat exchanger). The ratio of the rate of flow of the working medium in the MHD cycle proper to the rate of water flow in the lower stage of the cycle, m, is determined from a relationship similar to (12.51b):

$$m = \frac{i_{\mathrm{I}} - i_{\mathrm{III}}}{i_4 - i_5} \frac{1}{\eta_{\mathrm{s.g.}}}, \tag{12.54}$$

and the thermal efficiency of the closed-cycle MHD plant, in accordance with Eq. (12.52), is

$$\eta_{\text{closed}}^{\text{MHD}} = \frac{m\,(i_3 - i_4 - i_2 + i_1) + (i_{\mathrm{I}} - i_{\mathrm{II}})}{m\,(i_3 - i_2)}. \tag{12.55}$$

It is understood that this relationship is similar to Eq. (12.53) derived for an open-cycle plant; the subscripts correspond to the states on the T-s diagram in Fig. 12.14.

In accordance with the above, the inert gas used as a working medium in a closed-cycle MHD plant can be considered as a first approximation to be an ideal gas with a constant heat capacity. Then in Eq. (12.55) we can put

$$i_3 - i_2 = c_p (T_3 - T_2) \tag{12.56}$$

and

$$i_3 - i_4 = \frac{k}{k-1} p_1 v_3 \left[1 - \left(\frac{p_2}{p_1} \right)^{\frac{k-1}{k}} \right], \tag{12.57}$$

where k is the adiabatic exponent. Equation (12.57) is obtained from Eqs. (8.8) and (8.28), assuming gas velocity at the nozzle entry, w_1, to be negligible compared with gas velocity at the nozzle exit.

It will be noted that in a closed-cycle MHD plant argon or helium are most suitable as working media. These gases possess a remarkable property: at temperature lower than those associated with the products of combustion they make it possible, when used with a cesium or potassium addition, to ensure a greater electric conductivity than that permitted by the products of combustion themselves. Thus, when helium is used as a working medium with a cesium vapour as an addition, the upper cycle temperature T_3 can be set at 2000 °C, with the electric conductivity being the same as that of the products of combustion at a temperature of 2500 °C.* This simplifies the creation of MHD generators with modern high-temperature construction materials.

The thermal efficiency of a closed-cycle MHD plant, determined by Eq. (12.55), can equal approximately 0.65, and the effective thermal efficiency of the cycle is approximately 0.50.

Thus, like an open-cycle installation, a closed-cycle MHD plant ensures a high thermal efficiency.

Figure 12.15 shows another kind of closed-cycle MHD plant, differing from the MHD plant examined before in that it does not operate on the binary vapour cycle but incorporates a MHD generator and a gas turbine. In this plant, the gas at a pressure p_1 is delivered into nuclear reactor *1* where heat q_1 is added. The gas is then directed into MHD generator *2* where it expands adiabatically to pressure p_2, producing electric power. Upon leaving the MHD generator the exhaust gas flows into regenerative heat exchanger *3* and then into water cooler *4* where heat is transferred from the gas. After leaving the cooler, the gas is compressed in compressor *5* to a pressure $p_3 > p_1$ and flows into regenerative heat exchanger *3* where it is heated by the heat rejected from the exhaust gas from the MHD generator. The hot gas at a pressure p_3 then flows into gas turbine *6* where it expands adiabatically from pressure p_3 to pressure p_1 and produces work. After that the gas flows into the nuclear reactor.

The cycle of this MHD plant is shown on the T-s diagram in Fig. 12.16. Here line *1-2* represents adiabatic compression from pressure p_2 to pressure

* Here and below we are concerned with the results of using plasma in thermodynamic equilibrium, i.e. plasma whose electrons, ions and atoms are in thermodynamic equilibrium.

p_3; line *2-3'* represents isobaric (p_3 = const) heating of the gas in the regenerative heat exchanger; line *3'-4'* represents the work done in the gas turbine; line *4'-3* represents the isobaric process (p_1 = const) of heat addition, q_1, in the reactor; line *3-4* represents the work done in the MHD generator; line *4-m-1* represents the isobaric process (p_2 = const) of heat rejection; *4-m* represents rejection of heat in the regenerative heat exchanger*; and *m-1* rejection of heat, q_2, in the water cooler.

This kind of a closed-cycle MHD plant ensures a high thermal efficiency and is often preferred.

Molten metals (usually sodium and other alkaline metals), as well as partially ionized gases, are being considered as possible conducting media

Fig. 12.15

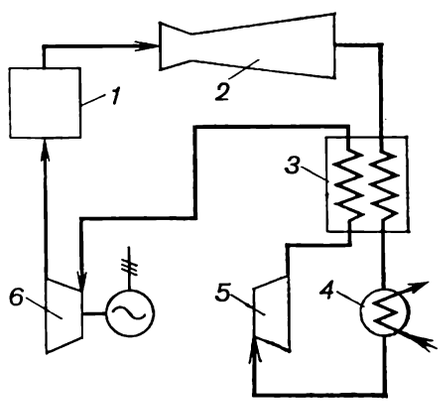

Fig. 12.16

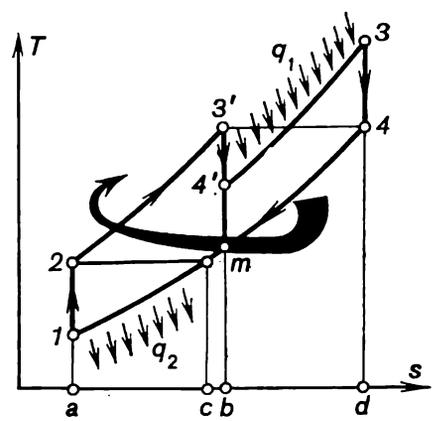

in MHD plants. The considerably greater electric conductivity of molten metals (4 to 5 orders of magnitude higher than that of a partially ionized gas) permits high power ratings with relatively low velocities of the molten metal in a MHD generator. The temperature of the molten metal at the inlet of such a generator may be low, hardly exceeding the metal's fusing temperature. The working medium can be accelerated at the inlet of the MHD generator by means of an injector operated with the vapour of a molten metal.

The efficiency of molten-metal MHD generators is appreciably lower than the efficiency of plasma installations, primarily due to the ineffectiveness of the method of accelerating molten metals (such as by an injector). However, the small size and compact design of the plant, due to the considerably higher power ratings, and the use of a device with no moving parts (an electromagnetic pump instead of the cumbersome compressor) for circuiating the working medium, make molten-metal MHD plants more suitable In a number of cases, transport power plants, for example.

---

* It is clear that area *a-2-3'-b-a* is equal to area *c-m-4-d-c*.

13

Refrigeration cycles

13.1 Reverse heat cycles and processes. Refrigerating installations

Substances, or bodies, are cooled to a temperature below ambient temperature with the aid of refrigerating units, or installations, realizing a *reverse heat cycle* (Fig. 13.1).

The concept of the reverse heat cycle was introduced in Chapter 2 and 3. It will be recalled that the name *reverse* is given to cycles in which the work of compression exceeds the work of expansion and heat is transferred from a low-temperature source to a high temperature source by added work.

In analyzing refrigeration cycles, we shall use the same notations as for heat engines: the heat transferred from the low-temperature source will be denoted by Q_2, the heat transferred to the high-temperature source by Q_1, and the work transferred in the cycle by L_c (correspondingly, per unit mass of the working fluid, by q_2, q_1 and l_c). It is clear that

$$q_1 = q_2 + l_c, \tag{13.1}$$

i.e. in a reverse process an amount of heat q_1 is transferred to the high-temperature source. This heat is equal to the sum of heat q_2 removed from the low-temperature source and heat equivalent to the work l_c transferred from an external source in the cycle.

If two machines simultaneously realize forward and reverse cycles between high-temperature and low-temperature sources of heat and if all the processes in the two machines are reversible, then the work l_c done in the forward cycle, as heat is transferred from the high-temperature source to the low-temperature source, will be equal to the work expended in the reverse cycle to trans-

fer heat from the low-temperature source to the high-temperature source. But if the processes in the two machines are accompanied by irreversible losses, the work spent in the forward cycle to remove an amount of heat q_1 from the high-temperature source will be less than the work expended in the reverse cycle to transfer a similar quantity of heat q_1 to the high-temperature source.

Like a thermopower plant, a refrigerating installation incorporates a device for compressing the working medium (a compressor or pump) and a device in which the working medium (called *refrigerants*) expands; the working medium may expand performing useful work (in a reciprocating

Fig. 13.1

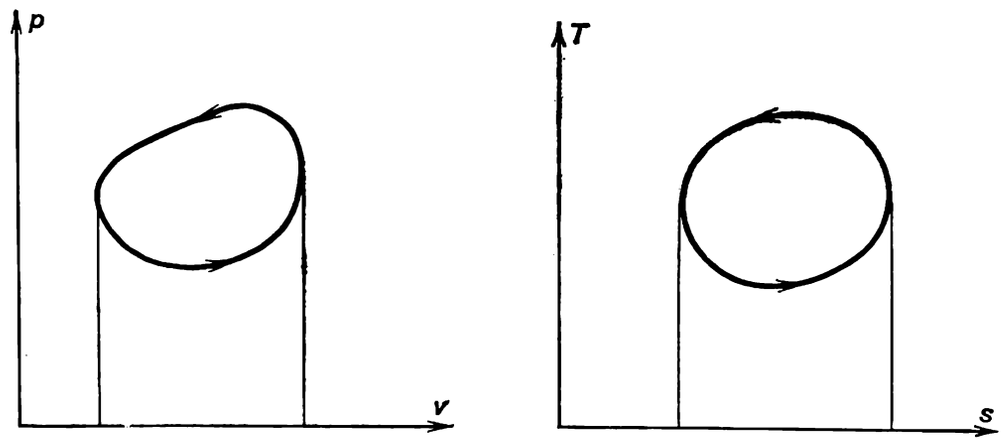

machine or in a turbine) or without doing useful work, i.e. expanding in a basically irreversible manner (by means of throttling).* The machines which cool the working medium (the refrigerant) in the process of its expansion and perform work, are called *expansion engines* or simply *expanders*. From a *T-s* diagram it can be seen that upon expansion from pressure p_1 to pressure p_2 the maximum drop in temperature will be attained if the expansion is isentropic. That is why expanders are thoroughly heat-isolated so as to make the process of expansion as close to adiabatic as possible. Expanders are divided into two groups: reciprocating and turbine. The schematic diagram of a *reciprocating expander* is similar to that of a reciprocating engine, and the schematic layout of a *turbine expander* is similar to that of a turbine.

The effectiveness of the cycle of a refrigerating installation is characterized by the so-called *refrigerating factor*, or *coefficient of performance*, ε, determined in the following manner:

$$\varepsilon = \frac{q_2}{l_c}, \tag{13.2}$$

or, taking Eq. (13.1) into account,

$$\varepsilon = \frac{q_2}{q_1 - q_2}. \tag{13.2a}$$

* The use of a basically irreversible process of expansion of the working medium (without useful work transfer) makes the layout of a refrigerating installation radically different from the layout of a thermopower plant, where irreversibility is merely a drawback.

Using the concept of mean heat-addition and heat-rejection temperatures for a cycle introduced in Chapter 9, we obtain:

$$q_2 = T_{\text{add}}^{\text{mean}} \Delta s$$

and

$$q_1 = T_{\text{rej}}^{\text{mean}} \Delta s,$$

where $T_{\text{add}}^{\text{mean}}$ is the mean temperature of heat addition to the refrigerant from the low-temperature source, $T_{\text{rej}}^{\text{mean}}$ the mean temperature of heat rejection from the refrigerant to the high-temperature source, and Δs is the

Fig. 13.2

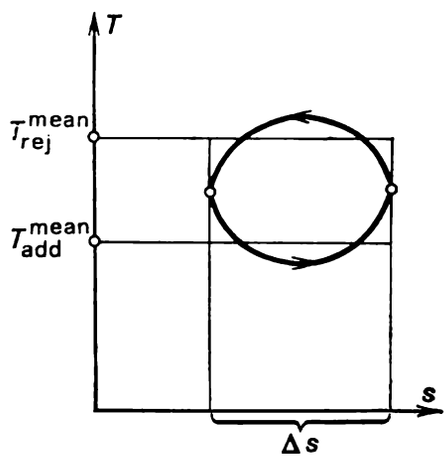

Fig. 13.3

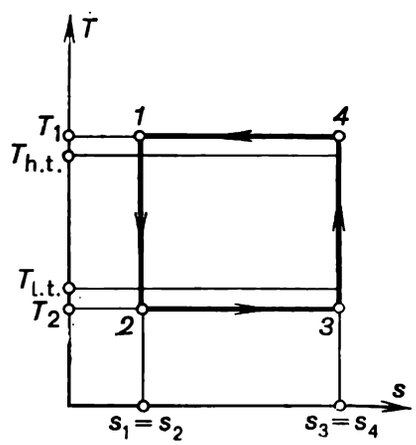

change of entropy between extreme cycle points (Fig. 13.2). Taking the above relationships into account, we can present (13.2a) as follows:

$$\varepsilon = \frac{T_{\text{add}}^{\text{mean}}}{T_{\text{rej}}^{\text{mean}} - T_{\text{add}}^{\text{mean}}}. \tag{13.3}$$

The greater the value of ε, the more effective is the cycle of a refrigerating installation: the greater the value of ε, the smaller the amount of work l_c expended to remove from the body being chilled (low-temperature source) the same amount of heat q_2. Like the thermal efficiency, the concept of the coefficient of performance will be used to analyze only reversible refrigeration cycles.

For refrigeration cycles not involving basically irreversible processes such as throttling it is easy to find an equation relating the thermal efficiency η characterizing a forward heat cycle with the coefficient of performance ε, characterizing a reverse heat cycle. Replacing in Eq. (13.2) l_c with

$$l_c = q_1 \eta,$$

and the ratio q_2/q_1 with

$$\eta = 1 - \frac{q_2}{q_1},$$

we obtain:

$$\varepsilon = \frac{1}{\eta} - 1. \tag{13.4}$$

One of the main characteristics of thermopower plants is the power rating. Refrigerating installations are characterized by their *refrigerating capacity*, defined as the quantity of heat removed from a chilled object per unit time. Refrigerating capacity is usually measured in kJ/h (also in W and kcal/h).

In Chapter 3 we discussed the cycle of an ideal refrigerating installation realizing a reverse reversible Carnot cycle. In this cycle, realized between a high-temperature source at a temperature $T_{\text{h.t.}}$ and a low-temperature one at a temperature $T_{\text{l.t.}}$, the compressed refrigerant (gas or vapour) whose state on the T-s diagram in Fig. 13.3 is represented by point *1*, expands reversibly along adiabat *1-2*, producing work (displacing a piston, for instance). In the course of adiabatic expansion the temperature of the refrigerant drops from T_1 to T_2. The refrigerant expands adiabatically until its temperature becomes equal to T_2, lower than the temperature $T_{\text{l.t.}}$ by an infinitely small value dT:

$$T_2 = T_{\text{l.t.}} - dT.$$

The refrigerant then undergoes isothermal expansion (along the isotherm T_2 = const), during which heat from the low-temperature source is transferred to the refrigerant, amounting to

$$q_2 = T_2 (s_3 - s_2). \tag{13.5}$$

After point *3* is reached the refrigerant is compressed adiabatically from temperature T_2 to the temperature T_1 which is determined from the relationship

$$T_1 = T_{\text{h.t.}} + dT.$$

Then heat is transferred from the refrigerant to the high-temperature source isothermally (T_1 = const) in the amount

$$q_1 = T_1 (s_4 - s_1). \tag{13.6}$$

Due to the rejection of heat, the specific volume of the refrigerant decreases, the refrigerant acquires its initial state *1*, and the cycle closes.

Taking into account that $s_1 = s_2$ and $s_3 = s_4$, we find that Eqs. (13.5) and (13.6) yield:

$$l_c = q_1 - q_2 = (T_1 - T_2)(s_3 - s_2). \tag{13.7}$$

In addition, allowing for Eqs. (13.7) and (13.4), we obtain from Eq. (13.2) for the reversible Carnot refrigeration cycle:

$$\varepsilon = \frac{T_2}{T_1 - T_2}. \tag{13.8}$$

It can be easily shown (by applying the methods used in Chapter 3 for analyzing heat engine cycles) that the reversible Carnot refrigeration cycle is the most effective of all refrigeration cycles within a given range of constant temperatures.

Clearly, like thermopower cycles, the cycles of real refrigerating installations differ from the Carnot cycle. Reversible cycles of refrigerating installations will be considered below.

The losses, due to the irreversibility of the cycles of real refrigerating installations* can be analyzed by the methods discussed in detail in Chapter 9 and in Sec. 11.3.

Refrigerating installations are divided into two main groups by type of refrigerant:

(1) gas (particularly air) refrigerating installations in which the refrigerant (air) is in a state far from the saturation line;

(2) vapour-cycle refrigerating installations in which the vapour of various substances are used as refrigerants.

Vapour-cycle refrigerating installations are subdivided into vapour-compression, steam-ejector (or steam-jet) and absorption refrigerating machines.

Another group includes thermoelectric refrigerating installations, whose principle of operation is based on the Peltier effect, and also installations based on the *Ettingshausen effect.* There is no refrigerant in the refrigerating installations of this type.

Also classified as refrigerating installations are devices used to obtain extremely low temperatures by adiabatic demagnetization of paramagnetic salts.

Let us look at the refrigeration cycles of the main types of refrigerating installations and machines.

13.2 Air-compression refrigeration cycle

The *air-cycle refrigerating installation* was one of the first units used. The schematic layout of an air-cycle refrigerating unit is presented in Fig. 13.4. The refrigerant (air) expands in expander *1* from pressure p_1 to pressure p_2, performing work transferred by the expander to the external consumer (for instance, generating electric power with the aid of an electric generator coupled with the expander). The air, chilled as the result of expansion in the expander from temperature T_1 to temperature T_2, flows into the chilled space *2* in which heat is transferred to the refrigerant; this heat is transferred from the chilled volume at a constant air pressure (p_2 = const). The rejection of heat from the chilled space is possible provided the temperature of the air is inferior to the temperature of the chilled space in the course of the isobaric process of heat rejection. In principle, the temperature of the air at the exit from the chilled space, T_3, can become equal to the temperature of the bodies being chilled; in practice, air temperature is always somewhat lower. From the chilled space air flows to compressor *3*** where its pressure is raised from p_2 to p_1 (with air temperature increasing from T_3 to T_4). Compressed air flows from the compressor into cooler *4*. The latter is a surface-type heat exchanger in which air temperature decreases with heat transfer to the cooling water circulating through the cooler. In principle, the temperature of air at the cooler exit, T_1, can be made as close as desirable to the temperature of the cooling water. However, in practice the temperature of air is always somewhat higher. In the cooler the process takes place at a constant air pressure (p_1 = const).

* The coefficient of performance of a real cycle is called the *actual coefficient of performance.*

** Turbine-compressors are usually used.

The air-compression refrigeration cycle is shown on a p-v diagram in Fig. 13.5. On the diagram, line *1-2* represents adiabatic expansion of air in the expander; line *2-3* refers to isobaric heat rejection from the chilled

Fig. 13.4

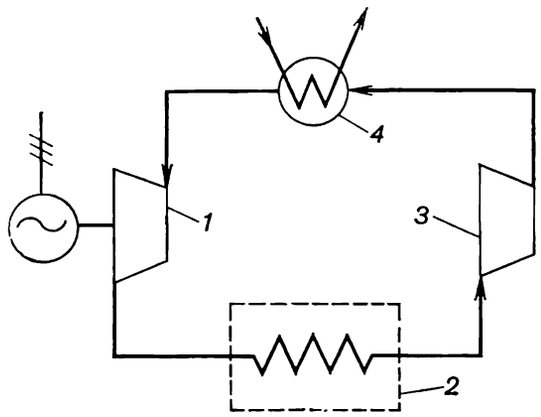

Fig. 13.5

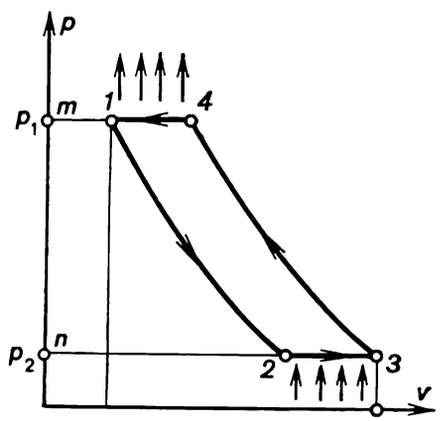

Fig. 13.6

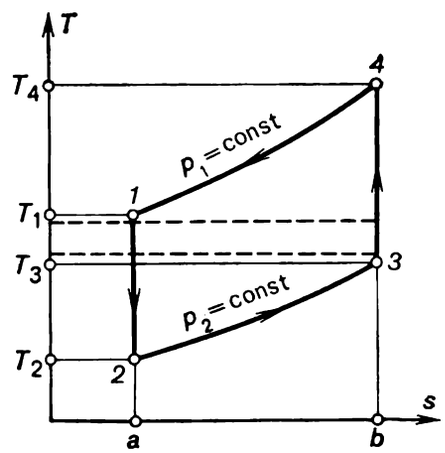

volume; line *3-4* shows the process of compression in the compressor; and line *4-1* represents the isobaric process of air cooling in the cooler. In this diagram, line *3-4-1* represents air compression, and line *1-2-3* air expansion. The work expended to drive the compressor is represented by area *m-4-3-n-m*, and the work done by the air in the expander by area *m-1-2-n-m*. It follows that the work spent in the air-compression cycle of a refrigerating installation, l_c, is depicted by area *1-2-3-4-1*.

In the compressor the process can be realized either along an adiabat, an isotherm, or a polytropic line with an exponent $1 < n < k$. With the same pressure ratio p_1/p_2, the greatest increase in air temperature takes place with adiabatic compression. The rate of heat transfer from the air intensifies with a rising temperature difference between the air and water. At a given temperature of the cooling water, however, an increase in air temperature involves an increase in the amount of work spent in the cycle.

The cycle of this installation is shown on a T-s diagram in Fig. 13.6. On the diagram line *1-2* represents the process of adiabatic air expansion in the expander; line *2-3* represents the isobaric process in the chilled volume; line *3-4* represents the process of adiabatic air compression in the com-

pressor; and line *4-1* represents the isobaric process developing in the cooler. As can be seen from the *T-s* diagram, the cycle of an air refrigerating machine can be treated as the reverse cycle of a constant-pressure combustion gas-turbine plant, involving adiabatic air compression in the compressor (see Fig. 10.16).

On the *T-s* diagram in Fig. 13.6, the heat q_2 rejected from the chilled volume is depicted by area *a-2-3-b-a*, the work spent in the cycle, l_c, is represented by area *1-2-3-4-1*; and the heat transferred to the cooler, q_1, by area *1-a-b-4-1*.

In air refrigerating installations air pressure is usually low (not over 500 kPa, i.e., about 5 kgf/cm²). Air refrigerating machines permit wide-range air temperature variation in the chilled volume. Therefore, when calculating their cycles, air should usually be considered a real gas. In practice, when the temperature in the chilled volume is considerably higher than the critical temperature of air (which is —140.7 °C, or 132.5 K), air can be considered an ideal gas with a constant heat capacity.

The heat q_2 transferred to the air from the chilled volume (low-temperature source) in the isobaric process *2-3* is

$$q_2 = i_3 - i_2, \tag{13.9}$$

and the heat q_1, transferred from the air to the cooling water in the cooler (high-temperature source) in the isobaric process *4-1* is equal to

$$q_1 = i_4 - i_1. \tag{13.10}$$

Assuming air to be an ideal gas with a constant heat capacity, we find that Eqs. (13.9) and (13.10) yield:

$$q_2 = c_p (T_3 - T_2)$$

and

$$q_1 = c_p (T_4 - T_1).$$

Substituting q_2 and q_1 into Eq. (13.2a), we obtain the following expression for the coefficient of performance of the cycle of an air refrigerating installation:

$$\varepsilon = \frac{T_3 - T_2}{(T_4 - T_1) - (T_3 - T_2)}, \tag{13.11}$$

or, which is the same,

$$\varepsilon = \frac{1}{\frac{T_4 - T_1}{T_3 - T_2} - 1}. \tag{13.11a}$$

In accordance with Eq. (7.61), for the adiabatic process *3-4*,

$$\frac{T_4}{T_3} = \left(\frac{p_4}{p_3}\right)^{\frac{k-1}{k}}, \tag{13.12}$$

and, similarly, for the adiabatic process *1-2*

$$\frac{T_1}{T_2} = \left(\frac{p_1}{p_2}\right)^{\frac{k-1}{k}}. \tag{13.13}$$

Inasmuch as for the isobaric processes *4-1* and *2-3*

$$p_1 = p_4 \text{ and } p_2 = p_3,$$

it is clear that Eqs. (13.12) and (13.13) give:

$$\frac{T_4}{T_3}=\frac{T_1}{T_2}. \tag{13.14}$$

Allowing for the above relationship, we can easily show that

$$\frac{T_4-T_1}{T_3-T_2}=\frac{T_1}{T_2}. \tag{13.15}$$

Substituting Eq. (13.15) into Eq. (13.11a), we obtain:

$$\varepsilon=\frac{1}{\frac{T_1}{T_2}-1}, \tag{13.16}$$

or, which is the same,

$$\varepsilon=\frac{T_2}{T_1-T_2}. \tag{13.16a}$$

Replacing in Eq. (13.16) the ratio T_1/T_2 from Eq. (13.13), we obtain the following expression for the coefficient of performance of an air-compression cycle:

$$\varepsilon=\frac{1}{\left(\frac{p_1}{p_2}\right)^{\frac{k-1}{k}}-1}. \tag{13.17}$$

Equation (13.16a) is similar to Eq. (13.8), which is the expression for the coefficient of performance of a reverse Carnot cycle. This similarity is, however, purely in form: in a reverse Carnot cycle T_2 is the temperature equal in the limit to the temperature of the chilled volume (denote it by T_{II}), whereas in the cycle of an air refrigerating installation, T_2 is considerably lower than T_{II} (in this cycle temperature T_{II} equals in the limit the temperature T_3). It follows that at the same temperature T_1 the coefficient of performance of a reverse Carnot cycle is greater than that of the air-compression refrigeration cycle realized in air refrigerating installations. This can be seen from the *T-s* diagram in Fig. 13.7, which presents a reverse Carnot cycle (*1-2k-3-3k-1*) and the cycle of an air refrigerating machine (*1-2-3-4-1*) realized in the same temperature interval, from T_I (the temperature of the cooling water, i.e. of the high-temperature source) to T_{II}. As this diagram shows, less heat is rejected in the cycle of an air refrigerating installation than in a reverse Carnot cycle (areas *a-2-3-b-a* and *a-2k-3-b-a* in Fig. 13.7), and the work expended in the cycle of the air refrigerating installation (area *1-2-3-4-1*) is greater than in the reverse Carnot cycle (area *1-2k-3-3k-1*). It will be noted that the coefficient of performance of the cycle of an air refrigerating installation differs essentially from that of a reverse Carnot cycle. In illustration, let us examine these refrigeration cycles realized in the temperature interval from $T_I = 20$ °C to $T_{II} = -5$ °C, assuming that in the cycle of an air refrigerating installation $p_1 = 390$ kPa (4 kgf/cm²) and $p_2 = 98$ kPa (1 kgf/cm²). For these two cycles let us assume that $T_1 = T_I = 20$ °C (293.15 K). As to the magnitude of T_2, it is clear that in the reverse Carnot cycle $T_2 = T_{II} = -5$ °C = 268.15 K and, in accordance with Eq. (13.13), in the cycle of an air refrigerating installation,

$$T_2=T_1\left(\frac{p_2}{p_1}\right)^{\frac{k-1}{k}}.$$

Again assuming an adiabatic exponent for air, $k = 1.35$, and substituting into the above equation the assumed values of T_1, p_1 and p_2, we obtain: $T_2 = 204$ K. Then, in accordance with Eq. (13.8), we obtain for the reverse Carnot cycle:

$$\varepsilon = \frac{268.15}{293.15 - 268.15} = 10.7,$$

and Eq. (13.16a) gives for the cycle of an air refrigerating installation the following coefficient of performance:

$$\varepsilon = \frac{204}{293.15 - 204} = 2.29,$$

i.e. 4.68 times smaller than for the reverse Carnot cycle.

Fig. 13.7

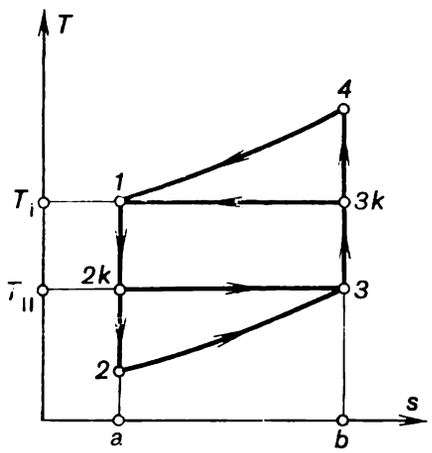

Fig. 13.8

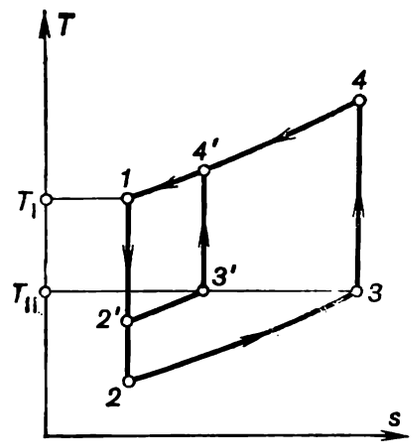

Hence, with the same amount of work expended the refrigerating capacity of an air refrigerating installation is considerably inferior to that of an installation in which a reverse Carnot cycle is realized. That is why air refrigerating installations realizing an air-compression cycle handle great amounts of air.

The shortcomings inherent in an air-compression refrigerating machine are traced to the fact that the processes of heat transfer from the chilled volume and from the air in the cooler are not isothermal but isobaric; the mean temperature at which heat is rejected in the cycle, T_{rej}^{mean}, happens to be higher than T_I, and the mean temperature at which heat is added, T_{add}^{mean}, is lower than T_{II}. It is clear that in the cycle of an air refrigerating installation the temperatures T_{rej}^{mean} and T_{add}^{mean} will be closer to T_I and T_{II}, respectively, the "narrower" the cycle on the T-s diagram, i.e. the less the air is subcooled at the expander exit compared with the chilled volume [in other words, the smaller the difference ($T_{II} - T_2$); see Fig. 13.8]. The T-s diagram, shown in Fig. 13.8 represents two cycles of an air refrigeration installation: *1-2-3-4-1* and *1-2'-3'-4'-1*, realized in the same temperature interval (between temperatures T_I and T_{II}). It is clear from this diagram that in the "narrower" cycle *1-2'-3'-4'-1* the temperatures T_{rej}^{mean} and T_{add}^{mean} are closer to T_I and T_{II}, respectively, than in the "wider" cycle *1-2-3-4-1*.

Hence, in accordance with Eq. (13.3), the "narrower" the cycle, the higher the coefficient of performance ε. However, it should be borne in mind that "narrowing" a cycle (i.e. decreasing the difference $T_{II} - T_2$) results, as can be seen from the T-s diagram, in a smaller rate of heat transfer from the chilled volume in one cycle. Thus, although theoretically the cycle becomes more effective, to ensure the previous refrigerating capacity (as in the *1-2-3-4-1*) the rate of air flow through the refrigerating circuit of the instal-

lation must be increased. In addition, the irreversibility of the real processes of adiabatic compression and expansion in a real installation affects a "narrow" cycle far more adversely.

Air refrigerating installations fitted with a reciprocating compressor were used in the second half of the 19th century. However, since the beginning of the 20th century this kind of refrigerating machines has not been successful in industry due to its low efficiency. Presently more efficient installations with turbine-compressors and regeneration are more widely used.

13.3 Vapour-compression refrigeration cycle

It is possible to affect isothermal addition and rejection of heat in a refrigerating installation when the wet vapour of a low-boiling liquid is used as the refrigerant, i.e. a liquid whose boiling point at atmospheric pressure $t_s \leqslant 0$ °C. In this respect, such a cycle resembles the Rankine power cycle with wet steam which also adds and rejects heat isothermally.

The schematic diagram of a vapour-compression refrigerating installation is shown in Fig. 13.9, while Fig. 13.10 shows the cycle on a *T-s* diagram.

The wet vapour compressed in compressor *3* to pressure p_1 flows into cooler (condenser) *4* where it condenses as heat is transferred to the cooling water. The process of condensation follows the isobar-isotherm *4-1*, so that the liquid leaving the condenser is in a saturated state corresponding to point *1* on the *T-s* diagram. With isothermal heat rejection, the difference between the temperatures of the condensing vapour and cooling water may be rather small.

It would appear that the refrigerant fluid must now be directed into an expander. It is, however, difficult to create an expander in which a saturated liquid rather than a gas or even a vapour expands and performs work. Therefore, expanders are usually not used in refrigerating installations employing the wet vapour of a low-boiling liquid, and instead of the process of expansion with external work transfer a process of expansion without external work transfer is realized, i.e. the throttling process considered in Sec. 7.6. It will be recalled that, as was shown in Sec. 7.6, in the two-phase region $\alpha_i^{t.ph.}$ is always greater than zero, i.e. the throttling of wet vapour always proceeds with a drop in temperature. The process of adiabatic throttling is accompanied by an increase in the entropy of the substance undergoing throttling; the enthalpy of a substance undergoing adiabatic throttling does not change.

Liquid at a pressure p_1 and temperature T_1 (point *1* on the *T-s* diagram shown in Fig. 13.10) flows to the throttling (expansion) valve (sometimes referred to as the reducing valve) *1* (Fig. 13.9) in which steam is throttled to the pressure p_2. Wet vapour leaves the throttling valve at a temperature T_2 and with a small dryness fraction. On the *T-s* diagram the irreversible process of throttling in the expansion valve is represented by line *1-2* (it will be recalled that inasmuch as, strictly speaking, irreversible processes cannot be shown on the diagrams of state, the line representing expansion upon throttling is a hypothetical line).

From the expansion valve the wet vapour flows to evaporator *2* (Fig. 13.9) arranged in the chilled volume, where the liquid contained in the wet vapour evaporates as heat is transferred from the chilled volume, with the dryness

fraction of the wet vapour increasing. The isobaric-isothermal process of heat addition to the refrigerant in the evaporator is represented by line *2-3* on the *T-s* diagram. The pressure p_2 is selected so that the corresponding saturation pressure is somewhat below the temperature of the chilled volume. As distinct from an expander, the throttling, or expansion, valve permits smooth control of the temperature in the chilled volume by varying the opening of the valve and thereby setting the temperature and pressure of the wet vapour in the evaporator.

Vapour with a high dryness fraction flows from the evaporator to the compressor in which it is compressed adiabatically from pressure p_2 to pressure p_1. During adiabatic compression (line *3-4* on the *T-s* diagram in

Fig. 13.9

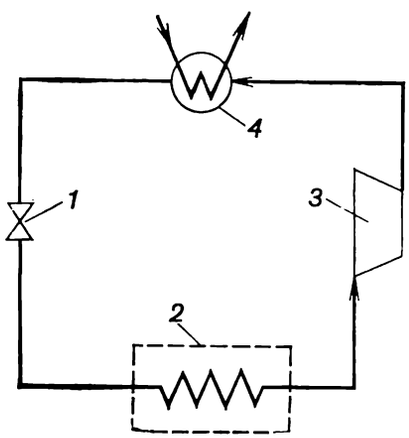

Fig. 13.10

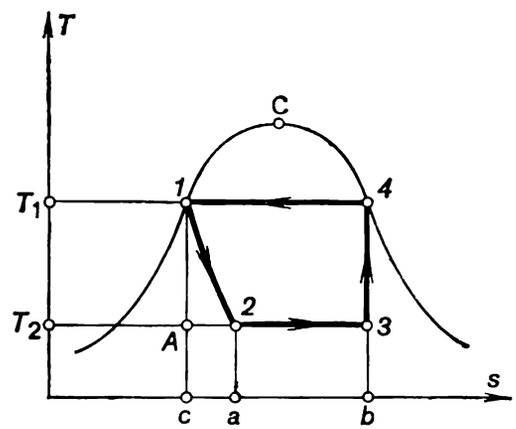

Fig. 13.10) the vapour dryness fraction increases so that dry saturated vapour* leaves the compressor. It will be noted that, depending on operating conditions, the state of the vapour leaving the compressor may be both in the saturation and superheat regions (Fig. 13.11). The vapour is then directed to condenser *4* and the cycle closes.

Refrigerating machines of this kind are referred to as vapour-compression installations, since wet vapour is compressed with the aid of a compressor. This cycle differs from the reverse Carnot cycle only in that instead of cooling the refrigerant by adiabatic expansion in the expander from temperature T_1 to temperature T_2 (line *1-A* on the *T-s* diagram in Fig. 13.10), the refrigerant is cooled by irreversible adiabatic expansion in the throttling valve (line *1-2*). The irreversibility of the throttling process causes a certain decrease in the refrigerating capacity compared with the reverse Carnot cycle. In fact, it can be seen from Fig. 13.10 that the amount of heat q_2 rejected from the low-temperature source (chilled volume) in the vapour-compression cycle is represented by area *a-2-3-b-a*, whereas the amount of heat q_2 rejected in the reverse Carnot cycle, in the same temperature and entropy intervals, is depicted by a larger area *c-A-3-b-c*.

In this vapour-compression cycle the work expended to drive the compressor, ensuring adiabatic compression of the refrigerant, is equal to

$$l_{\text{comp}} = i_4 - i_3, \tag{13.18}$$

* The vapour is sometimes separated after the chilled volume, and as a result, moisture is separated and dry saturated vapour enters the compressor; this causes an increase in the internal relative efficiency of the machine.

inasmuch as in this cycle the refrigerant expands without external work transfer (during the process of expansion $i_1 = i_2$), it is clear that the work of the cycle is equal to that of the compressor, l_{comp}, i.e. in accordance with Eq. (13.18),

$$l_c = i_4 - i_3. \tag{13.18a}$$

The heat added to the refrigerant in the chilled volume is

$$q_2 = i_3 - i_2. \tag{13.19}$$

Substituting these values of l_c and q_2 into Eq. (13.2), we obtain the following expression for the coefficient of performance of the vapour-compres-

Fig. 13.11

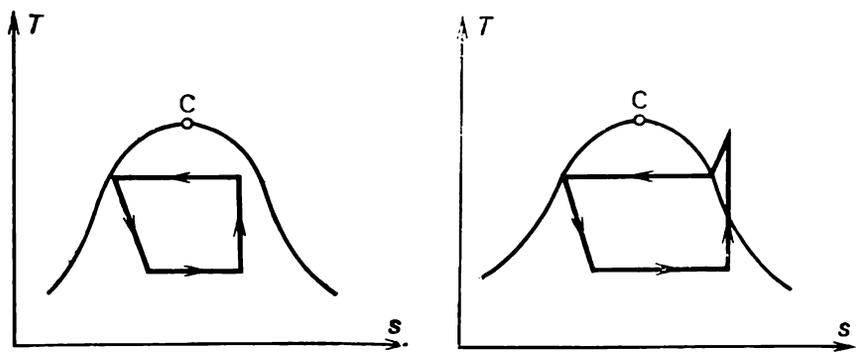

sion refrigeration cycle:

$$\varepsilon = \frac{i_3 - i_2}{i_4 - i_3}. \tag{13.20}$$

Calculations show that ε for a vapour-compression refrigeration cycle differs from that of the Carnot refrigeration cycle much less than for the air-compression cycle (an example will be given below). Thus, compared with an air refrigerating installation, a vapour-compression refrigerating machine has a higher coefficient of performance and also ensures a higher refrigerating capacity. It follows that, when operated in a narrow temperature interval, a vapour-compression installation is a more thermodynamically perfect machine than an air refrigerating installation. For a wide temperature interval the gas-compression refrigerating installation is more advantageous.

The main requirements which refrigerants must meet are: first, the temperature interval in which the cycle is realized (i.e. between T_1 and T_2, Fig. 13.10) must lie between the critical and triple points of the substance (so that wet vapour can exist in this temperature interval); second, in this temperature interval the pressure of the saturated refrigerant vapour should not be too low (since this would require that a perfect vacuum be maintained in the installation, making it rather complicated to build) nor should the vacuum be too high (this would also make the refrigerating installation more complicated).

Since the upper temperature of the vapour-compression cycle, T_1, is determined by the temperature of the cooling water flowing into the condenser, it is approximately the same for all cycles realized with different sub-

stances. As in the condensers of heating and power stations, the coolers of refrigerators maintain a temperature of cooling water from 0 to 30 °C. Estimates may be based on an average temperature $T_I = 20$ °C and, accordingly, the upper cycle temperature (i.e. the condensation temperature at the upper cycle pressure p_1) can be assumed equal to $T_1 = T_I + (5 \text{ to } 10$ °C).

The lower cycle temperature T_2 depends on the purpose of the refrigerating installation. Vapour-compression refrigerating installations are used where a temperature ranging from 0 to —120 °C or even lower must be created and maintained in the chilled volume. It is clear that in designing a refrigerating installation, the refrigerant is selected by the temperature interval in which the installation is to operate. It is desirable that at the lower cycle temperature T_2 the pressure of the saturated refrigerant vapour is close to atmospheric; this permits a simpler installation with less strict vacuum-maintenance requirements.

It follows from Fig. 13.10 that the amount of heat q_2 transferred in cycle from the chilled volume (area *a-2-3-b-a*) is greater, the greater the entropy difference $(s_3 - s_2)$, since

$$q_2 = T_2 (s_3 - s_2). \tag{13.21}$$

The difference $(s_3 - s_2)$ is larger, the "wider" the cycle, i.e. the greater the entropy difference $(s_4 - s_1)$, with

$$s_4 - s_1 = \frac{r}{T_1}, \tag{13.22}$$

where r is the heat of vapourization of the given refrigerant at a temperature T_1. It follows that with the same rate of refrigerant flow in a refrigerating installation, the refrigerating capacity of the cycle is higher, the greater the heat of vapourization of the refrigerant involved at the cycle's upper temperature. Thus, the quantity r is a criterion to rate a refrigerant.

Many refrigerants have been suggested for vapour-compression refrigerating installations. Let us examine the refrigerants most widely used at present.

Water cannot be used as a refrigerant for the temperature interval indicated, since, first, the temperature of the triple point for water is 0.01 °C (consequently, below this temperature a two-phase mixture does not consist of vapour and water but of vapour and ice) and, second, the saturation pressure for water at temperatures even above the triple point is rather low [at the triple point p_s is 610.8 Pa (0.006 228 kgf/cm²), and at 5 °C it is 871.8 Pa (0.008 890 kgf/cm²)]. Therefore, water vapour (steam) is unsuitable for refrigerating installations where $T_2 < 3$ °C.

In Fig. 13.12 the saturation pressure of various refrigerants is plotted on log paper as a function of temperature in the interval from — (minus) 100 to + (plus) 50 °C, and the heat of vapourization of various refrigerants as a function of temperature in the same temperature interval is represented in Fig. 13.13.

As can be seen from the graph in Fig. 13.12, at $T_1 = 20$ °C carbon dioxide, one of the first refrigerants used, has a high saturated vapour pressure (5700 kPa, or 58.1 kgf/cm²); even at $T_2 = -30$ °C the saturated carbon-dioxide vapour pressure is 1430 kPa (14.6 kgf/cm²). As a result, plants with carbon dioxide as a refrigerant are rather complicated to build.

Ammonia (NH_3) is a good refrigerant. At $T_1 = 20$ °C the pressure of saturated ammonia vapour is 857 kPa (8.74 kgf/cm²); a pressure of 98 kPa

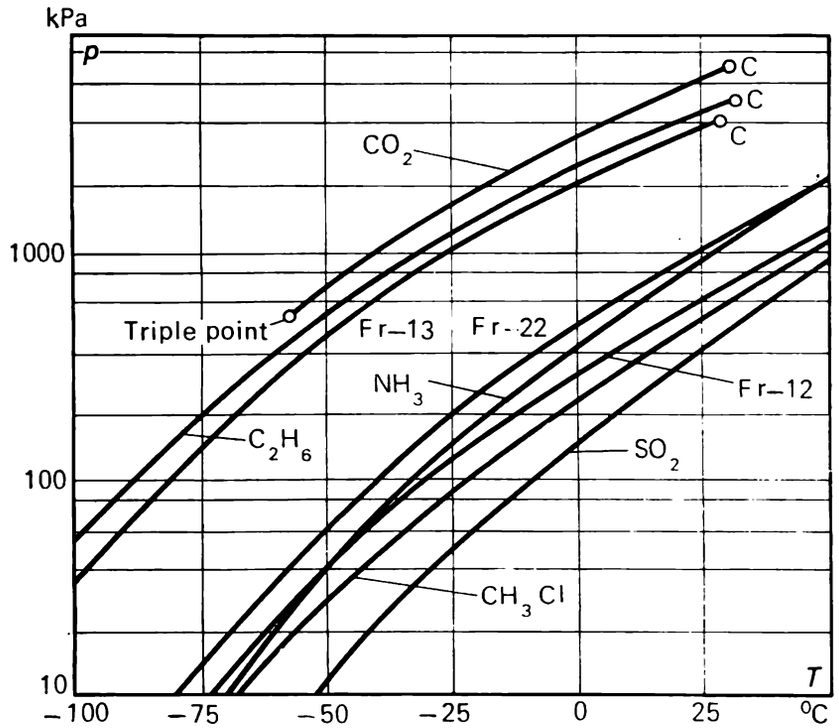

Fig. 13.12

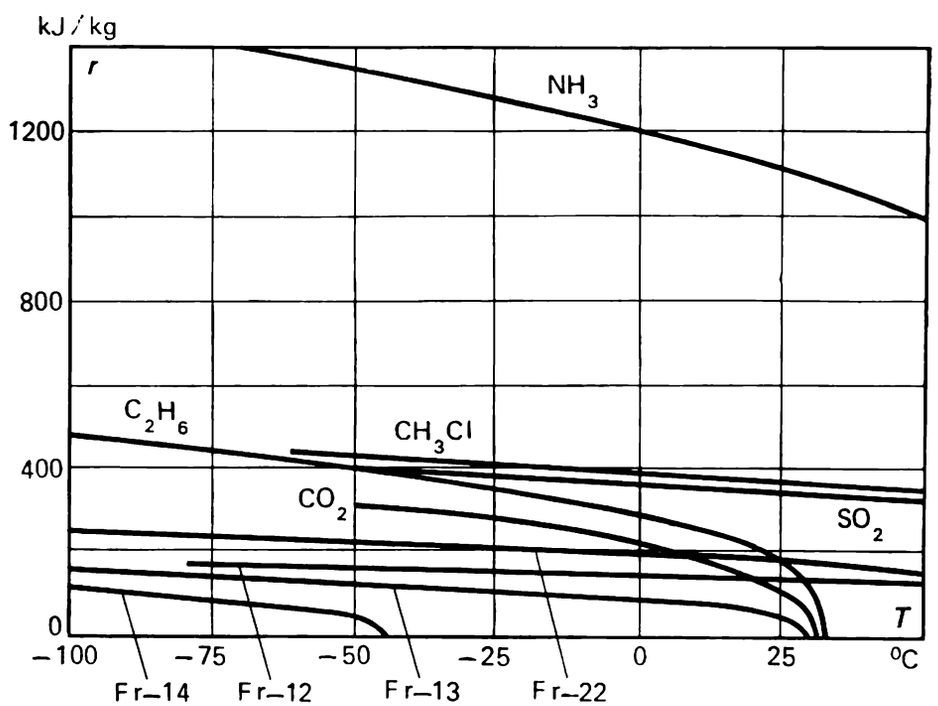

Fig. 13.13

corresponds to saturation temperature of —34 °C. Hence, the creation of an ammonia vapour-compression refrigerating installation for a temperature $T_2 \geqslant -34$ °C does not necessitate a vacuum, which naturally considerably simplifies the design of the installation. It should also be noted that, as can be seen from the dependence of r on T plotted in Fig. 13.13, the heat of vapourization of NH_3 is considerably greater than for any other refrigerant and consequently ensures a greater refrigerating capacity per unit

mass of the refrigerant. These qualities make ammonia one of the best refrigerants, and it is widely used in industrial refrigerating installations. Because of its shortcomings—toxicity and corrosivity in relation to nonferrous metals—ammonia is not used in home refrigerators.

As can be seen from the graph shown in Fig. 13.12 methyl chloride (CH_3Cl) and, in certain cases, ethane (C_2H_6), are suitable refrigerants. Sulphur dioxide (SO_2) is too toxic to be used.

Freons, fluorochlorine derivatives of the simplest saturated hydrocarbons, are more and more used as refrigerants. Freons are chemically stable, nontoxic, and do not attack construction materials (at $T < 200$ °C). The boiling point of various freons at atmospheric pressure varies within a wide temperature range. At atmospheric pressure freon-14 (CF_4) boils at a temperature $T = -128$ °C; freon-13 ($CClF_3$) at $T = -82$ °C; freon-22 ($CHClF_2$) at $T = -40.8$ °C; and freon-12 (CCl_2F_2) at $T = -29.8$ °C.

The most common of the freon refrigerants is freon-12, used in many home refrigerators*. Although the thermodynamic properties of freon-12 are close to those of ammonia, its heat of vapourization is less than that of ammonia.

To illustrate the properties of various refrigerants Table 13.1 shows the results obtained in calculating the refrigeration cycle of a vapour-compression refrigerator operating at $T_1 = 30$ °C and $T_2 = -15$ °C with a refrigerating capacity of 13 942 kJ/h (3330 kcal/h). The table gives the pressures

Table 13.1 Comparison of refrigerants

Refrigerant	Saturated vapour pressure (kPa)		Performance ε	$\frac{\varepsilon}{\varepsilon_{Carnot}}$	Flow rate (kg/h)
	for −15 °C	for 30 °C			
Any substance in the Carnot cycle	—	—	5.74	1	—
Carbon dioxide	2305	7163	2.56	0.447	96.0
Ammonia	236	1167	4.85	0.845	11.2
Freon-12	182	744	4.72	0.823	106.8
Sulphur dioxide	81	458	4.74	0.825	38.4
Methyl chloride	144	658	4.67	0.817	38.6
Propane	289	1070	4.88	0.850	44.9

of saturated refrigerant vapours at 30 °C and at −15 °C, the values of the coefficient of performance, and the rates of refrigerant flow required to ensure the given refrigerating capacity. The table also gives the ratios of the coefficient of performance of a vapour-compression refrigeration cycle to the performance coefficient of a reverse Carnot cycle realized in the same temperature interval.

As the table shows, unlike the air-compression refrigeration cycle, the vapour-compression refrigeration cycle's coefficient of performance differs little from that of the reverse Carnot cycle. The only exception is the carbon-

* Home refrigerators are usually vapour-compression types, fitted with a piston-type compressor.

dioxide vapour-compression cycle. Its comparatively low performance comes from the fact that, inasmuch as the temperature T_1 (equal to 30 °C) is close to the critical temperature of carbon dioxide (31.0 °C), the heat of condensation for that temperature is rather low, the cycle is "narrow" and, consequently, it is greatly affected by the process of nonisentropic expansion of the refrigerant vapour in the expansion valve.

Ammonia ensures a high cycle performance at a rather small rate of refrigerant flow. Although freon-12 refrigerating machines have a slightly inferior performance than do ammonia installations, the former operate with a higher rate of refrigerant flow (due to the small heat of vapourization of freon-12).

The first vapour-compression refrigerating installation using ether vapour as a refrigerant was created as far back as 1834. This type of refrigerating machine was then operated with methyl ether and sulphur dioxide. In 1874, the German engineer K. von Linde created an ammonia refrigerating installation, and in 1881 a carbon dioxide vapour-compression refrigerating machine. During the 1930's vapour-compression refrigerating installations were operated with synthetic freons.

Before the 1920's only piston-type compressors were used in vapour-compression refrigerating installations. Then, when high-capacity refrigerating installations were built, rotary-, screw- and turbine-compressors came into usage.

Vapour-compression refrigerating installations are usually most effective for the needs of moderate chilling and are widely used in industry and in the home.

An important technological process in the refrigeration industry is the production of solid carbon dioxide, made in a vapour-compression refrigerating installation using carbon dioxide as a circulating refrigerant. The method of producing solid carbon dioxide is rather simple: saturated liquid carbon dioxide is throttled in an expansion valve to a pressure below the pressure at the triple point. As a result the medium flowing from the expansion valve is a two-phase mixture consisting of dry saturated carbon dioxide vapour and solid-phase crystals, which are in equilibrium with the vapour. The solid phase (in an amount corresponding to the dryness fraction of this two-phase mixture) precipitates and is removed, and the gas is sent into the compressor to repeat the cycle. The used carbon dioxide, which precipitates as a solid, is replaced by introducing new portions of the gaseous carbon dioxide into the circuit of the refrigerating installation making dry ice.

The parameters of carbon dioxide at the triple point are $T_{\text{tr. p.}} = -56.6$ °C; and $p_{\text{tr. p.}} = 518$ kPa (5.28 kgf/cm²). Inasmuch as in the state of saturation at the upper temperature of a vapour-compression cycle, equal to 25 °C, the pressure of carbon dioxide $p_1 = 6430$ kPa (65.6 kgf/cm²) and this cycle involves throttling of the saturated liquid carbon dioxide to the pressure $p_2 = 98$ kPa (1 kgf/cm²) ($T_s = -78.5$ °C), it is clear that the pressure ratio of the compressor is rather great ($p_1/p_2 = 65.6$). If we take into account the fact that dry rather than wet saturated vapour enters the compressor (the second component of the two-phase mixture, solid carbon dioxide, is extracted from the mixture), the carbon dioxide leaving the compressor operating with such a pressure ratio will be heavily superheated and its temperature will be about 216 °C.

Since a single unit cannot operate with such a high pressure ratio, a multiple stage compressor is used; the temperature of the carbon dioxide is reduced during compression by interstage cooling in intercoolers arranged between the stages of the compressor. Installations manufacturing dry ice

Fig. 13.14

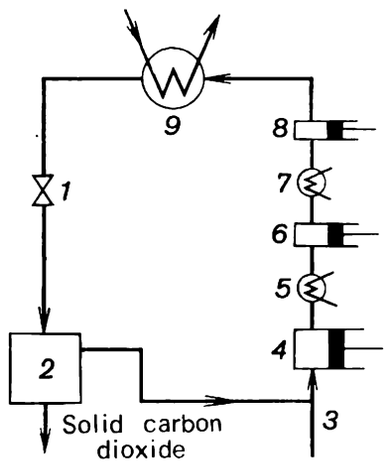

Fig. 13.15

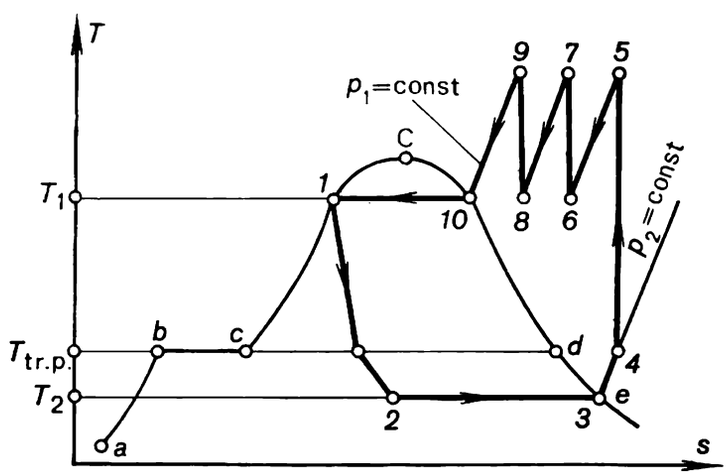

usually have three-stage piston compressors, ensuring interstage water cooling of the compressed carbon dioxide. The schematic diagram of a simplest dry ice (solid carbon dioxide) maker is shown in Fig. 13.14. On this diagram the following notations are used: *1*, the expansion valve; *2*, the chamber for solid carbon dioxide; *3*, the make-up gas circuit inlet; *4*, *6* and *8*, the first, second and third compressor stages, respectively; *5* and *7*, the intercoolers ensuring interstage cooling of compressed carbon dioxide; and *9*, the condenser.

The cycle of this dry ice maker is shown on the *T-s* diagram in Fig. 13.15. Represented on this *T-s* diagram are the two-phase liquid-vapour region (*cCdc*) and the two-phase solid-vapour region (*abcde*), separated by the triple point isotherm $T_{tr.\,p.}$ = const (straight line *bcd*). Line *ab* corresponds to the saturation state of the solid phase, and line *ed* to the dry saturated vapour in equilibrium with the solid phase. Line *1-2* represents the process of throttling in the expansion valve. (Passing through the triple point temperature, line *1-2* has a discontinuity. Inasmuch as in the two-phase region

$\alpha_i = dT/dp$, and at the triple point the slope of the sublimation curve differs from that of the boiling curve, the nature of this discontinuity is clear.) Line *2-3* represents the separation of the dry saturated vapour from the solid phase; line *3-4* shows slight superheating of the vapour due to mixing of the dry saturated vapour and a small amount of the supplementary gas (usually introduced into the circuit at atmospheric pressure and a temperature of approximately 20 °C). The isentropes *4-5*, *6-7* and *8-9* correspond to compression in the first, second and third stages of the compressor, while the isobars *5-6* and *7-8* on the *T-s* diagram represent intermediate cooling of the gas.* Line *9-10-1* depicts isobaric heat rejection in the condenser, with line *9-10* representing the cooling of the gas to the saturation temperature, and line *10-1* the process of condensation.**

This kind of installation is used to make solid carbon dioxide at a temperature of —78.5 °C [at that temperature the heat of vapourization is 573 kJ/kg (137 kcal/kg)]. Solid carbon dioxide is known as "dry ice". It is most widely used in the food industry.

Multistage compression is used in refrigeration cycles not only in the production of solid carbon dioxide. It is hard to maintain a temperature below —25 °C in the chilled volume even with so suitable a refrigerant as ammonia. To attain lower values of T_2 for the same value of T_1 a greater pressure drop across the expansion valve is required, i.e. the compressor must operate with a greater pressure ratio, with the values of the ratio p_1/p_2 required so high that it becomes necessary to use multistage compression with water-cooled intercoolers arranged between compressor stages. At values of T_2 ranging from approximately —25 to —55 °C, two-stage compression is sufficient; three-stage compression is used with T_2 ranging from —55 to —85 °C.

13.4 Steam-jet refrigeration cycle

Like the cycle of a vapour-compression refrigerating installation, the steam-jet refrigeration cycle is realized with a refrigerant in the wet-vapour state. The basic difference between the two cycles is that while the vapour leaving the chilled volume in the vapour-compression cycle is compressed by a compressor, the steam-jet refrigeration cycle ensures compression by a steam-jet ejector whose principle of operation was described in Sec. 7.9.

Why is the steam-jet ejector used instead of the compressor? Refrigerating installations intended for creating moderately low temperatures (from about 3 to 10 °C) can be operated using water vapour, or steam, as a refrigerant. At temperatures close to 0 °C, however, the specific volume of steam is rather great (for instance, at $T = -5$ °C we have $v'' = 147.2$ m³/kg). A piston compressor meant to compress steam of such a small density would be very cumbersome. For precisely this reason, steam-jet refrigerating installations using water as a refrigerant incorporate a considerably more compact, although

* The process of air compression in the compressor need not necessarily be organized as shown on the *T-s* diagram in Fig. 13.15, i.e. with air heated in each stage to the same temperature.

** It should be noted that modern installations permit compression in each stage to higher and higher temperatures (with intercooling). The process of expansion is also of the multistage type.

far less perfect and efficient, apparatus, a steam-jet ejector operated with cheap low-condition steam.

The steam-jet refrigerating installation is one of the oldest types of refrigerator. The schematic diagram of a steam-jet refrigerating installation is shown in Fig. 13.16.

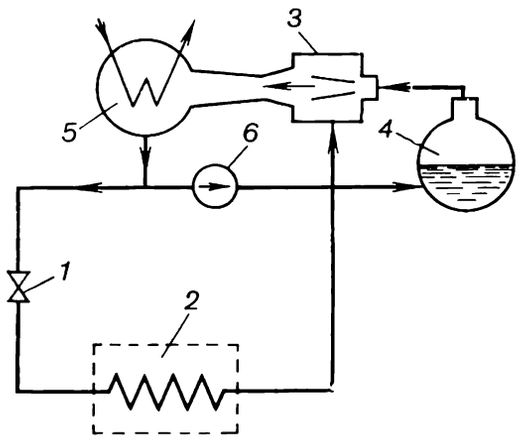

Fig. 13.16

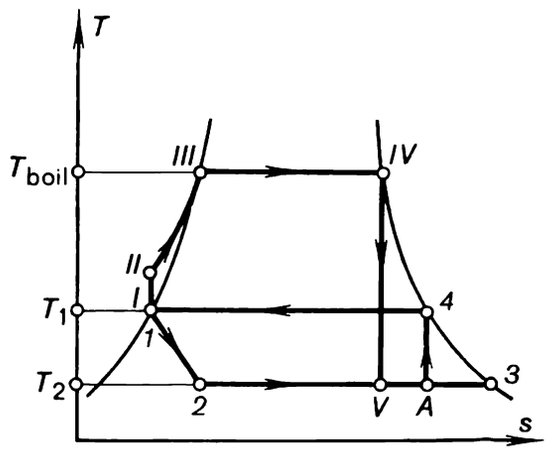

Fig. 13.17

Steam forming as saturated water expands in expansion (reducing) valve *1* from pressure p_1 to pressure p_2 flows into evaporator* *2* arranged inside the chilled volume. From the evaporator steam with a high dryness factor and at the pressure p_2 is directed into the combining chamber of the ejector *3*. Operating steam is delivered to the ejector nozzle from boiler *4* at a pressure p_{boil}. The rates of steam flow into the ejector combining chamber from the evaporator and into the ejector nozzle from the boiler are selected such that steam leaves the ejector diffuser at a pressure p_1. From the ejector the dry saturated steam flows to condenser *5* where it condenses transferring heat to the cooling water. The flow of condensate, leaving the condenser at a pressure p_1, splits into two streams: a greater portion of the water flows into the refrigerating circuit, to the inlet of expansion valve *1*, while a smaller portion flows to feed pump *6* in which water pressure is raised to p_{boil};

* The temperature in the evaporator of a steam-jet refrigerating installation can be maintained below the temperature of the water triple point (0.01° C) if brine is used as a refrigerant.

the pump delivers the water to boiler *4*. Heat added in the boiler upon fuel combustion causes vapourization.

The steam-jet refrigerating installation differs essentially from the vapour-jet refrigerator in that mechanical energy (supplied from an electric motor or some other engine) is expended to drive the compressor. The vapour refrigerant is compressed in the ejector by the kinetic energy of the steam generated in the boiler.

The steam-jet cycle is represented on the *T-s* diagram shown in Fig. 13.17. Just as for the vapour-compression cycle, line *1-2* on this diagram represents the process of adiabatic throttling of saturated water in the expansion valve, and line *2-3* reflects the isobaric-isothermal process in the evaporator (let us assume for the sake of definiteness that dry saturated steam leaves the evaporator).

The same diagram represents the cycle which that portion of steam circulating in the "boiler-ejector-condenser-boiler" circuit undergoes. We must remember that the representation of the cycle on the *T-s* diagram is hypothetical: the rates of steam flow in each of the two refrigerator circuits are different, whereas on the *T-s* diagram both cycles are plotted for unit mass of steam. On the diagram, *I-II* represents the process of raising water pressure in the feed pump; *II-III-IV*, the process of adding heat in the boiler along the isobar p_{boil} = const (*II-III*, the heating to the boiling point; *III-IV*, the vapourization); and *IV-V*, the process of steam expansion in the ejector nozzle. In the nozzle the steam expands to the pressure p_2 (point *V*) and then mixes with steam at the same pressure, flowing into the ejector from the evaporator (point *3*). The mixing of wet steam in state *V* with dry saturated steam in state *3* yields steam with an intermediate dryness fraction (between *V* and *3*), point *A*.

Line *A-4* corresponds to the increase in the pressure of the two steam flows in the ejector diffuser from p_2 to p_1, and line *4-1* represents condensation of this amount of steam in the condenser of the steam-jet refrigerating installation.

Inasmuch as no work is transferred in the cycle from the outside*, and heat is added in the boiler instead of external work, the effectiveness of the steam-jet refrigeration cycle is characterized by the *heat utilization factor* ξ, determined by the ratio

$$\xi = \frac{q_2}{q_{\text{boil}}}, \tag{13.23}$$

where q_2 is the amount of heat removed from the chilled volume, and q_{boil} is the amount of heat added in the boiler.

The notation given in Fig. 13.17 permits formula (13.23) to be presented in the following form:

$$\xi = \frac{i_3 - i_2}{(i_{\text{IV}} - i_1)\, g}, \tag{13.24}$$

where g denotes the ratio of the amount of steam at the pressure p_{boil} flowing into the ejector nozzle from the boiler to the amount of steam coming into the ejector combining chamber from the evaporator.

---

* The work of the pump supplying feed water to the boiler, $i_{\text{II}} - i_1$, is negligible, i.e. i_1 is assumed equal to i_{II}.

The heat utilization factor should not be confused with the coefficient of performance ε, since the latter includes the work expended in the cycle, l_c, while the former includes the heat involved in the cycle, q_{boil}. If we let l^* be the amount of work which could be obtained from this amount of heat in a thermopower cyclerealized between sources with temperatures T_{boil} and T_1, and η be the thermal efficiency of this cycle, then $q_{boil} = l^*/\eta$; it follows from Eq. (13.23) that

$$\xi = \varepsilon^*\eta, \tag{13.25}$$

where ε^* is the coefficient of performance of this refrigerator defined as $\varepsilon^* = q_2/l^*$. Since, in principle, we know neither the exact value of η nor the kind of the thermopower cycle, the hypothetical nature of this method is obvious. For the sake of definiteness, we can only assume that this thermopower cycle is a Carnot cycle. It follows that a direct comparison of the effectiveness of a vapour-compression cycle and a steam-jet cycle is methodologically complicated.

As has been already mentioned, the temperature T_2 of steam-jet refrigeration cycles ranges from 3 to 10 °C [at these temperatures the corresponding pressure of saturated steam (water vapour) is from 0.7 to 1.2 kPa, i.e. from 0.007 to 0.012 kgf/cm^2].

The upper cycle temperature is usually kept from 30 to 40 °C (the corresponding pressure of saturated vapour at these temperatures ranges from 4.2 to 7.4 kPa, i.e. from 0.043 to 0.075 kgf/cm^2).

The pressure p_{boil} of the dry saturated steam delivered into the ejector nozzle from the boiler is usually set from 0.3 to 1 MPa, i.e. from 3 to 10 kgf/cm^2 (boiler water temperature T_{boil} reaches 180 °C).

Compared with the cycle of a vapour-compression refrigerating installation, the steam-jet refrigeration cycle is thermodynamically rather imperfect, since the process of mixing in the ejector is accompanied by a loss in availability due to the fundamentally irreversible nature of this process. Nevertheless, because of their simple construction (compact design, absence of moving parts*) and use of cheap steam at low conditions as a refrigerant, steam-jet refrigerating plants are used.

13.5 Absorption refrigeration cycle

The cycle of an absorption refrigerating installation, or the *absorption refrigeration cycle*, is another variety of refrigeration cycle using wet vapour as a refrigerant. It differs from the steam-jet and vapour-compression cycles in the method of compressing the vapour leaving the evaporator.

This installation operates on the principle of absorption of vapour by a solvent. By this we mean the absorption of a substance by the entire volume of an absorbent. As is generally known, the vapour of a pure substance can be absorbed (condensed) by the same substance in the liquid state only if the temperature of the liquid is less than the temperature of the vapour. The direct-contact regenerative heaters examined in Chapter 9 for instance, are based on this principle.

Unlike pure substances, solutions possess a remarkable ability to absorb the vapour of a solution of one composition by the liquid solution of another composition even when the temperature of the liquid is higher than vapour temperature. Precisely this property of solutions is applied in absorption refrigerating installations. Inasmuch as a detailed examination of the pro-

* With the exception of the water pump.

cesses in solutions is beyond the scope of this book, we shall dwell only briefly on the process of absorption.

At a constant pressure, the boiling point of a binary solution depends on its composition. The boiling point or temperature is higher, the greater the fraction of the solution component with a higher boiling point. The

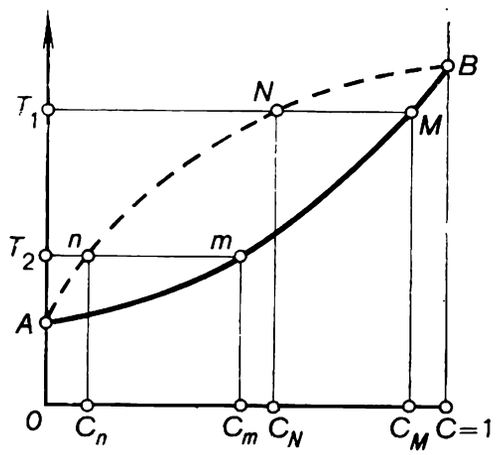

Fig. 13.18

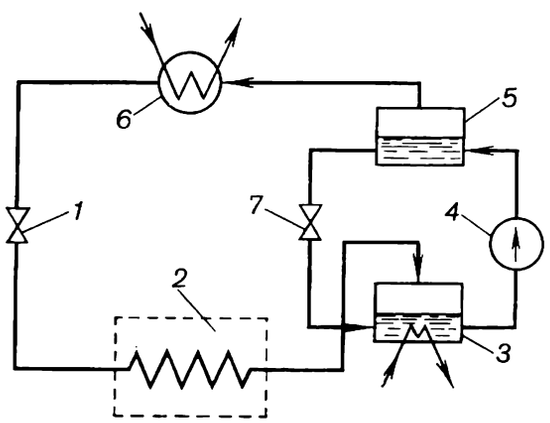

Fig. 13.19

dependence of the boiling point of a binary solution at constant pressure on the composition of the solution is represented by the boiling curve on a T-C diagram, where C is the composite fraction of the high-boiling component. On the T-C diagram shown in Fig. 13.18 the boiling curve is represented by the solid line. The composition of the vapour forming upon boiling a solution differs from the composition of the liquid solution which is in equilibrium with the vapour; the vapour phase contains more of the low-boiling component. The vapour curve, the line of compositions of vapour which is in equilibrium with the liquid, is represented on the T-C diagram, shown in Fig. 13.18, by the dotted line. As can be seen from Fig. 13.18, at a temperature T_1 the composition of the vapour which is in equilibrium with the liquid of composition C_M is C_N, and at a temperature T_2 for the liquid solution of composition C_m there is a vapour of composition C_n. If the supercooled vapour of composition C_n at a temperature T_2 is brought into contact with the liquid solution of composition C_m at a temperature T_1, it is clear that the vapour will condense (will be absorbed by the liquid solution). In this process the liquid and vapour are at the same pressure.

The heat of vapourization which is released during absorption, proceeding at the temperature T_1, is rejected from the solution. The resulting solution is of composition C, with $C_m < C < C_N$.

The schematic diagram of an absorption refrigerating installation is shown in Fig. 13.19. This installation uses wet ammonia vapour as a refrigerant. The liquid saturated ammonia undergoes throttling in expansion valve *1* from pressure p_1 to pressure p_2 and cools as a result of throttling from temperature T_1 to temperature T_2. Wet ammonia vapour then passes into evaporator *2*, where the dryness fraction of the vapour increases to $x = 1$ because of the heat q_2 transferred from the chilled volume. The dry saturated ammonia vapour at a temperature T_2 flows into absorber *3*, into which an aqua-ammonia solution is delivered at a temperature T_1. Since for the same pressure water boils at a considerably higher temperature than ammonia, the low-boiling component of this solution is ammonia, and this solution absorbs ammonia vapour; the heat of absorption, q_{ab}, released in the process of absorption, is removed by the cooling water.* In the absorption process the concentration of ammonia in the solution increases and, consequently, an enriched solution leaves the absorbent, at a temperature $T_2 < T_{II} < T_I$ and pressure p_2. Pump *4* raises the pressure of this enriched solution from p_2 to p_1 and delivers it to the ammonia-vapour generator *5* where the solution is evaporated by heat q_g added to the solution from an external source. The resulting vapour is much richer in ammonia than the solution from which it is evaporated. Virtually, pure ammonia vapour separates from the solution, since the partial pressure of the water vapour present in the gas phase is negligible at these temperatures. This ammonia vapour then passes, at a temperature T_1 and pressure p_1, into condenser *6* where the vapour condenses and liquid saturated ammonia is directed to flow to expansion valve *1*. The ammonia-poor solution leaving the vapour generator *5*, whose ammonia content dropped considerably because of evaporation, is throttled in expansion valve *7* from pressure p_1 to pressure p_2 and directed to flow to absorbent *3* where, as was already mentioned above, the solution is enriched with ammonia by absorbed ammonia vapour. It should be noted that the temperature of this weak solution undergoing throttling in expansion valve *7* does not change appreciably**. Hence, for all practical purposes, $T_I = T_1$.

From the schematic diagram of this refrigerating installation it can be seen that the installation's absorption component, consisting of absorber *3*, ammonia vapour generator *5*, pump *4* and expansion valve *7*, in the final analysis serves to compress ammonia vapour from the evaporator exit pressure p_2 to the condenser inlet pressure p_1. The advantage of this method of compressing ammonia vapour is that while in a conventional vapour-compression refrigerating installation considerable work is expended to compress the refrigerant vapour, in an absorption refrigerator the pump

---

* As ammonia dissolves in water, the solution temperature rises, and the solubility of ammonia in water diminishes. Thus the process of absorption will soon terminate, if heat is not rejected from the solution.

** Since the properties of a weak aqua-ammonia solution make it close to water and in refrigerating installations the temperature of this solution is known to be less than 248 °C, the temperature below which the Joule-Thomson coefficient for water is negative, throttling of the solution is accompanied by some increase in temperature, albeit negligible (for water at a temperature $T = 20$ °C we have $\alpha_i = 0.2 \times 10^{-5}$ m²-K/kg).

raises the pressure of a liquid (aqua-ammonia solution), with a negligible amount of work compared with that spent to drive the compressor. In addition the pump is compact and designed simply. To be sure, the gain in work spent to drive the compressor is compensated by the heat expended in the ammonia vapour generator *5*; this heat is then removed by the cooling water in absorber *3*, so that $q_{ab} = q_g$ (if the work of the pump is ignored).

The *heat utilization factor of an absorption refrigerating installation* is determined from the relationship

$$\xi = q_2/q_g. \tag{13.26}$$

Previously, absorption refrigerating installations were rather widely used, but with the development of compressors they were superseded by compression refrigerating installations. However, cooling, or chilling, by means of absorption is still used in refrigerating engineering (for instance, in some types of home refrigerators). It is expedient to operate absorption refrigerating installations where waste steam or other low-potential heat-carrying agents can be used to evaporate ammonia from the aqua-ammonia solution in the ammonia-vapour generator.

13.6 Thermoelectric refrigeration cycle

The thermoelectric method of cooling is based on the Peltier effect discussed in Sec. 12.1. It will be recalled that the essence of this effect is that if a current from an external source flows through a thermoelectric circuit, one of the circuit junctions absorbs heat and the other releases heat. As has been shown in Sec. 12.1, the amount of heat Q absorbed in or released from a junction is proportional to the current in the thermoelectric circuit, namely

$$Q = \alpha T I.$$

If we let the temperature of the surroundings to which the junction releasing heat is exposed be T_1 and the temperature of the medium surrounding the heat-absorbing junction be T_2, then the expressions for the amounts of released heat (Q_1) and absorbed heat (Q_2) can be given in the following form:

$$Q_1 = \alpha T_1 I \tag{13.27}$$

and

$$Q_2 = \alpha T_2 I. \tag{13.28}$$

It follows that if $T_1 > T_2$, then $Q_1 > Q_2$, i.e. the hot junction releases more heat than the cold junction absorbs. It is clear that the difference

$$Q_1 - Q_2 = \alpha I (T_1 - T_2) \tag{13.29}$$

is equal to the electric energy expended by the external source. This energy is used to ensure the flow of a current against the electric potential difference, which appears in this circuit when T_1 is not equal to T_2, according to the Seebeck law. In fact, in accordance with Eq. (12.2), the circuit potential difference is

$$\Delta E = \alpha (T_1 - T_2),$$

and, consequently, the work done by the electric current in this circuit, equal to the product of the current and the potential difference, will be

$$L = \alpha I (T_1 - T_2),$$

which coincides with Eq. (13.29).

If the heat-absorbing junction is placed in a chilled volume (junction temperature T_2) and the junction from which heat is released is located in surroundings of a higher temperature (T_1), the result will be a thermoelectric refrigerating installation, shown schematically in Fig. 13.20.

The cycle of a thermoelectric refrigerating installation is the reverse cycle of the thermoelectric generator discussed in Chapter 12.

Fig. 13.20

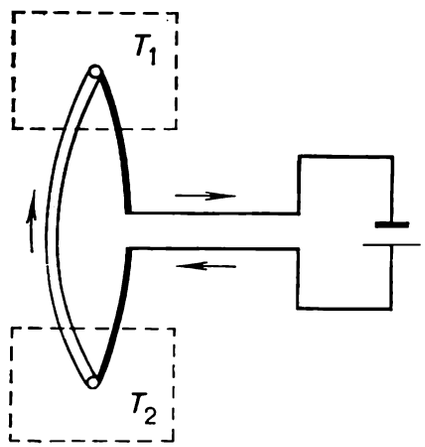

If the flow of current through a thermoelectric circuit did not involve irreversible losses, the coefficient of performance of such a refrigerator would be

$$\varepsilon = \frac{\alpha T_2 I}{\alpha I (T_1 - T_2)} = \frac{T_2}{T_1 - T_2} \tag{13.30}$$

in accordance with (13.2a).

As expected, this quantity coincides with the coefficient of performance of the reverse Carnot refrigeration cycle: heat is removed from the chilled volume at a constant temperature T_2 and is transferred to the high-temperature source at a constant temperature T_1. In addition, we assume that no irreversible processes are involved.

Actually, the functioning of a thermoelectric refrigerating installation involves two types of irreversible losses: first, the flow of current along a conductor is accompanied by the inevitable loss of Joule's heat; second, the heat is lost by conduction from the circuit conductors through which heat flows continuously from the hot junction to the cold junction.

The magnitude of Joule's heat is determined from relation (12.21):

$$Q_J = I^2 r,$$

where r is the resistance of the electrodes. The magnitude of r is determined from Eq. (12.22):

$$r = \left(\frac{\rho_I}{\sigma_I} + \frac{\rho_{II}}{\sigma_{II}}\right) l.$$

The amount of heat flowing from the high-temperature source to the cold junction due to conductivity, Q_λ, is determined from Eq. (12.18):

$$Q_\lambda = \frac{\lambda_{\mathrm{I}}\sigma_{\mathrm{I}} + \lambda_{\mathrm{II}}\sigma_{\mathrm{II}}}{l}(T_1 - T_2),$$

or, which is the same [see Eq. (12.20)],

$$Q_\lambda = \Lambda\,(T_1 - T_2).$$

As has been mentioned in Sec. 12.1, it can be assumed with a high degree of accuracy that one half of Joule's heat released in the circuit flows to the cold junction, and one half to the hot junction.

Consequently, the amount of heat transferred to the cold junction from the chilled volume will be less than the quantity determined by Eq. (13.28), the difference between the two being equal to the heat transferred due to Joule's heat (one half of the total amount of heat lost) plus the heat transferred by conduction:

$$Q_2 = \alpha T_2 I - \frac{1}{2} Q_{\mathrm{J}} - Q_\lambda. \tag{13.31}$$

The work of the cycle $L_c = Q_1 - Q_2$, which in the absence of irreversible losses would be determined from relationship (13.29), should include the work spent to overcome the electrical resistance of the circuit (Joule's heat), so that

$$L_c = \alpha I\,(T_1 - T_2) + Q_{\mathrm{J}}. \tag{13.32}$$

It follows that in accordance with Eq. (13.2) the coefficient of performance of the real cycle of a thermoelectric refrigerating installation can be given in the form

$$\varepsilon = \frac{\alpha T_2 I - \frac{1}{2} Q_{\mathrm{J}} - Q_\lambda}{\alpha I\,(T_1 - T_2) + Q_{\mathrm{J}}}. \tag{13.33}$$

Comparing this expression with Eq. (13.30), we see that, as expected, the irreversible losses decrease the magnitude of the coefficient of performance.

It is clear that the greater α is the smaller the resistivity of the conductors from which the thermoelectric circuit is built (i.e. the smaller Q_{J}) and the smaller the thermal conductivity of these conductors (i.e. the smaller Q_λ is), the higher the coefficient of performance. In other words, the coefficient of performance is higher, the greater the coefficient z characterizing the properties of the thermoelectric materials. (This coefficient was introduced in the preceding chapter when analyzing thermoelectric generators.)

Let us demonstrate it in greater detail. As can be seen from Eq. (13.33), the coefficient of performance of a thermoelectric refrigerating installation depends on the intensity I, i.e. on the voltage applied to the thermal electrodes, ΔE. Replacing in Eq. (13.33) I with its value from Ohm's law,

$$I = \frac{\Delta E}{r},$$

where r is the resistance of the thermal electrodes, and substituting the value of Q_λ from equation (12.20) and Q_{J} from Eq. (12.21) into Eq. (13.33), we obtain:

$$\varepsilon = \frac{\alpha T_2 - \frac{1}{2}\Delta E - \frac{r}{\Delta E}\Lambda\,(T_1 - T_2)}{\alpha\,(T_1 - T_2) + \Delta E}. \tag{13.34}$$

The value of ΔE at which the coefficient of performance is maximum for given T_1, T_2, α, Λ and r (denote this value of ΔE by ΔE^*) can be obtained by differentiating (Eq. (13.34) with respect to ΔE and equating the result with zero:

$$\Delta E^* = \frac{T_1 - T_2}{T_1 + T_2} \frac{2\alpha}{z} \left[1 + \sqrt{\frac{z}{2}(T_1 + T_2) + 1} \right]; \tag{13.35}$$

here, as in Sec. 12.1, we use expression (12.30),

$$z = \frac{\alpha^2}{\Lambda r},$$

characterizing the materials of the conductors of the thermoelectric circuit. Taking into account the notation introduced in Sec. 12.1,

$$\nu^* = \sqrt{\frac{z}{2}(T_1 + T_2) + 1},$$

we obtain:

$$\Delta E = \frac{\alpha (T_1 - T_2)}{\nu^* - 1}.$$

Substituting this value of ΔE^* into equation (13.34), we find the maximum value of the coefficient of performance at given T_1, T_2, α, Λ and r:

$$\varepsilon = \frac{T_2}{T_1 - T_2} \frac{\nu^* - T_1/T_2}{\nu^* + 1}. \tag{13.36}$$

The first factor in the right-hand side of this equation is the coefficient of performance of a reverse Carnot cycle, while the second factor accounts for the decrease of this coefficient of performance due to the irreversible losses (conductivity and Joule's heat).

If follows from Eq. (13.36) that the coefficient of performance is closer to the quantity $T_2/(T_1 - T_2)$, the greater the value of ν^* compared with T_1/T_2. As can be seen from Eq. (12.34) ν^* is greater, the larger is z. Consequently, the coefficient of performance is actually higher, the greater the value of z.

As has been mentioned in Chapter 12, semiconductor thermoelements have the highest values of z. Their use permits the construction of thermoelectric refrigerating circuits with a coefficient of performance several times greater than with metal thermoelements.

The magnitude of the coefficient of performance for a semiconductor thermoelectric refrigerating installation can be estimated by the following example. Let us take a semiconductor refrigerating installation whose thermoelectric circuit is made of materials with the following properties: $\alpha = 3 \times 10^{-4}$ V/K, $\rho_I \cong \rho_{II} \cong 10^{-5}$ ohm-m, $\lambda_I \cong \lambda_{II} \cong 1$ W/(m-K). Assume the electrodes to be 0.01 m long and the density of the current in the circuit $j = 2 \times 10^5$ A/m^2 (0.2 A/mm^2). The temperature of the chilled volume is $T_2 = -5$ °C, and the ambient temperature $T_1 = 20$ °C.

We shall calculate the coefficient of performance of this refrigerator, based on 1 mm^2 (i.e. $\sigma = 10^{-6}$ m^2) of the cross-sectional area of each thermal electrode.

In accordance with Eqs. (12.19) and (12.20),

$$Q_J = 2j^2\rho l\sigma = 2(2 \times 10^5)^2 \times 0.01 \times 10^{-6} = 0.0080 \text{ W } (6.88 \text{ cal/h}),$$

and, in accordance with Eq. (12.16),

$$Q_\lambda = 2\frac{\lambda\sigma}{l}(T_1 - T_2) = \frac{2 \times 1 \times 10^{-6}}{0.01} 25 = 0.0050 \text{ W } (4.30 \text{ cal/h}).$$

Further,

$$\alpha T_2 I = 3 \times 10^{-4} (273.15 - 5) \times 2 \times 10^5 \times 10^{-6} = 0.0161 \text{ W } (13.82 \text{ cal/h})$$

and

$$\alpha (T_1 - T_2) I = 3 \times 10^{-4} \times 25 \times 2 \times 10^5 \times 10^{-6} = 0.0015 \text{ W } (1.29 \text{ cal/h}).$$

Taking these values into account, we find that Eqs. (13.31) and (13.32) give

$$Q_2 = 0.0161 - \frac{1}{2} \times 0.0080 - 0.0050 = 0.0071 \text{ W}$$

and

$$L_c = 0.0015 + 0.0080 = 0.0095 \text{ W},$$

so that

$$\varepsilon = \frac{0.0071}{0.0095} = 0.75.$$

In accordance with Eq. (13.30), the coefficient of performance for the Carnot refrigeration cycle realized in this temperature interval is

$$\varepsilon^{\text{Carnot}} = \frac{273.15 - 5}{25} = 10.7,$$

i.e. exceeds more than 14 times the value for an actual refrigerating plant.

As can be seen from this example, thermoelectric refrigerating installations are rather imperfect. However, because of their simple construction and reliability, they are more and more used as home refrigerators.

13.7 Heat pump. Principle of operation

While refrigerating installation is in operation, heat is removed from the chilled volume and transferred to a medium which is at a higher temperature. Hence, the realization of the refrigeration cycle results not only in cooling the element from which heat is transferred, but also in heating the heat absorbing element.

This prompted Lord Kelvin to suggest in 1852 that the refrigeration cycle could be used to heat houses, i.e. he suggested the creation of the so-called *heat pump*.

A refrigerating installation used to transfer heat to a heated volume is called a heat pump because it seemingly "pumps" heat from a low-temperature source to a high-temperature source. The heat transferred to the high-temperature source, q_1, is equal to the heat removed from the low-temperature source, q_2, plus the work transferred from the outside to realize the refrigeration cycle, l_c. Although any refrigerating installation is essentially a heat pump, this term is usually associated with refrigerating installations whose main purpose is to heat a heat absorber.

The effectiveness of the heat pump is estimated by a *heating coefficient*, or coefficient of performance, defined as the ratio of the heat q_1 transferred to the high-temperature body heated volume to the amount of work l_c transferred in the cycle:

$$\varepsilon_{\text{h.p.}} = \frac{q_1}{l_c}. \tag{13.37}$$

The coefficient of performance of a heat pump, $\varepsilon_{\text{h.p.}}$, can be easily related with the coefficient of performance of the same installation operated

as a refrigerator, ε, since, in accordance with Eq. (13.1),

$$q_1 = q_2 + l_c,$$

and taking Eq. (13.2) into account, we find from Eq. (13.37) that

$$\varepsilon_{h.p.} = \varepsilon + 1. \tag{13.38}$$

It follows from Eq. (13.38) that the higher the coefficient of performance of a refrigeration cycle is, the greater the coefficient of performance of the heat-pump cycle.

To realize any refrigeration cycle (including, of course, the cycle of a heat pump) work should be expended, l_c, transferred from an external source of work*. This work is spent to drive a compressor or any other apparatus compressing the refrigerant. All this work can, of course, be converted into heat (in an electric heater, for instance), which can be used to heat a room. The advantage of the heat pump over all other heating appliances is that with the same amount of energy (l_c) spent a heat pump enables more heat to be transferred to the heated room ($l_c + q_2$) than is transferred with any other method of heating (when electric heating is employed, the amount of heat transferred to the heated volume, or high-temperature body, is equal to l_c). This should not be surprising, since while an electric motor only converts work into heat, the heat pump using the same amount of energy converts heat of a low temperature potential into heat of a higher temperature potential, i.e. "pumps heat".

Inasmuch as for the heat pump q_1 is always greater than l_c, it follows that $\varepsilon_{h.p.} > 1$ is always true, which can be seen from Eq. (13.38).

The coefficient of performance of heat pumps operated on reversible cycles is considerably greater than one. For instance, if a heat pump realizes a reverse Carnot cycle and if the temperature of the chilled space is $T_2 = 0$ °C and the temperature of the heated room is to be $T_1 = 25$ °C, the coefficient of performance of this heat pump determined by Eq. (13.38), taking into account Eq. (13.8)

$$\varepsilon_{h.p.} = \frac{T_2}{T_1 - T_2} + 1 = \frac{T_1}{T_1 - T_2},$$

will be

$$\varepsilon_{h.p.} = \frac{25 + 273.15}{25} = 11.9,$$

i.e. the amount of heat transferred into the heated room is 11.9 times greater than the work expended in the cycle.

Heat pumps operated on refrigeration cycles which are less perfect than the Carnot cycle have a lower coefficient of performance.

The decrease of the coefficient of performance in real installations is also traced to the inevitable losses due to the irreversibility of the processes in the installation's components. The coefficient of performance of real heat pumps can be 3.4 and more.

A vapour-compression heat pump was used for the first time to heat building in 1930. Since then, many heat pumps have been constructed. There are reasons to believe that heat pumps will be used even more in the future.

---

* Heat, and not work, is transferred from an external source in steam-jet and absorption refrigerating installations.

The existing heat pumps are operated on the air-compression, vapour-compression, and thermoelectric refrigeration cycles.

It should be noted that refrigerating installations can be used for combined production of cold and heat. For example, as early as 1943 an ammonia refrigerating installation was constructed for an indoor skating rink; the water cooling the condenser of this refrigerating installation became quite hot and was utilized by the municipal heating system. Combined installations of this kind clearly have much potential.

13.8 Liquefaction of gases

In the laboratory as well as in industry, it often becomes necessary to maintain low temperatures in enclosures for a short period of time. Since it would be unreasonable to build a special refrigerating installation for each case, it is far more expedient to use liquefied gases.*

The boiling points of some liquefied gases at atmospheric pressure are given in Table 13.2.

If a gas, such as nitrogen, is liquefied in some way and then poured into the chilled volume, then, since at a constant pressure any pure liquid evaporates at a constant temperature, the temperature in the chilled volume will remain constant and equal to the saturation temperature of nitrogen at atmospheric pressure equal to 77.4 K. By periodically replacing the nitrogen lost in evaporation (adding liquid nitrogen into the chilled volume), a low temperature can be maintained in the chilled volume.

Table 13.2 Boiling points of liquids at atmospheric pressure

Substance	T_{boil} (K)	Substance	T_{boil} (K)
Helium	4.2	Nitrogen	77.4
Hydrogen	20.4	Air *	≅ 80
Neon	27.3	Oxygen	90.2

* Air is a mixture of several gases and therefore the boiling point of air changes somewhat (increases) in the course of boiling, as the liquid-phase concentration of the high-boiling component (nitrogen) diminishes.

Liquefied gases are kept in long-time storage in Dewar vessels, which are double-wall glass or metal, vessels with a vacuum between the walls.

If the pressure in the volume where the liquefied gas evaporates is reduced relative to atmospheric pressure, the temperature of the evaporating liquid will drop and the temperature of the chilled volume will become somewhat lower. In practice, the pressure of a gas in equilibrium with its liquid is reduced by continuously pumping the gas from the chilled volume by prevacuation pumps; the chilled volume should then be isolated from the surroundings. By adjusting the rate of evacuation, it is possible to vary the pressure in the chilled volume and thereby the temperature of the evaporating liquid.

* Liquefied gases are also used in power engineering, transport, and in the food industry, for rectification processes, etc.

As Table 13.2 shows, helium has the lowest boiling point at atmospheric pressure (4.2 K). Evacuation of the gaseous helium from a chilled volume makes it possible to maintain a helium temperature of about 0.71 K, with the saturation pressure equal to 0.48 Pa (3.6×10^{-3} mm Hg).

Liquefied gases are used not only as refrigerants but for other purposes as well.

The three main methods of gas liquefaction are the Pictet cascade method, the Linde gas liquefaction process, and the Claude gas liquefaction process.

The *Pictet cascade method* is the oldest gas liquefaction process. Named after the Swiss physicist R. Pictet, who suggested this method in 1877, the method of cascade liquefaction is realized by combining several vapour-compression refrigeration cycles (a cascade). The schematic diagram of the installation realizing the method of cascade liquefaction is shown in Fig. 13.21.

In the upper cycle *I* of the cascade the refrigerant condenses in condenser K_{I} and the heat of condensation is transferred to the cooling water. The refrigerant used in the second cycle *II* has a boiling point lower than that of the refrigerant of the first cycle (at the same pressure). The refrigerant of the second cycle condenses in condenser K_{II} and the heat of condensation is transferred to the evaporating refrigerant of the first cycle, circulating through this condenser. The refrigerant of the first cycle is a coolant for the second cycle, as water was for the first cycle*.

The second cycle thus realized, its upper temperature T_1^{II} will be close to the lower temperature of the first cycle T_2^{I} (although somewhat higher); consequently, the lower temperature of the second cycle T_2^{II} will then be considerably lower than if the condenser is cooled with water.

In the third cycle (*III*) of the cascade a refrigerant with an even lower boiling point is used. In the condenser of this cycle, K_{III}, the heat liberated upon condensation of the third-cycle refrigerant is transferred to the evaporating refrigerant of the second cycle; as a result, T_2^{II} is almost equal to T_1^{III}.

The fourth (*IV*) cycle of the cascade operates with the gas which is to be liquefied. The gas is precooled in condenser K_{IV} to a temperature T_1^{IV}, close to temperature T_2^{III}.

This gas is then expanded in a reducing valve to the state corresponding to a two-phase mixture. The liquid component of the mixture is separated and discharged from the circulation circuit, and the non-liquefied fraction of the gas is directed to the inlet of the compressor, and the cycle is repeated. Gas is added into the circulation circuit from an outside source to replace the liquefied portion of the gas discharged from the circuit.

It should be noted that the layout of the cascade cycle is somewhat like that of the binary thermopower cycle discussed in Sec. 11.6 (the only difference is that the latter is made up of forward and the former of reverse cycles).

The number of cascade cycles (stages) may differ depending on the gas to be liquefied. For example, air can in principle be liquefied in a four-stage cascade, similar to that shown schematically in Fig. 13.21. The first cycle is realized with ammonia, the second with ethylene, the third with oxygen, and the fourth cycle is realized with the liquefied gas, air. The same four-

---

* The only difference is that cooling water does not evaporate in the condenser, and is heated slightly.

stage layout can also be used to liquefy nitrogen. In principle, a five-stage cascade is suitable for neon or hydrogen liquefaction, and a six-stage cascade is sufficient to liquefy helium.

In 1877 the Pictet method of cascade liquefaction was used to liquefy oxygen, nitrogen and carbon oxide.

An installation based on the Pictet method of gas liquefaction is complex since it consists of several refrigerant and coolant circuits, compressors, condensers, expansion (reducing) valves and other components. This hampers

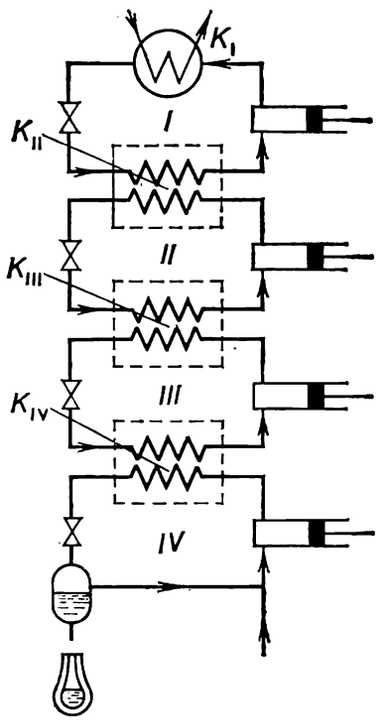

Fig. 13.21

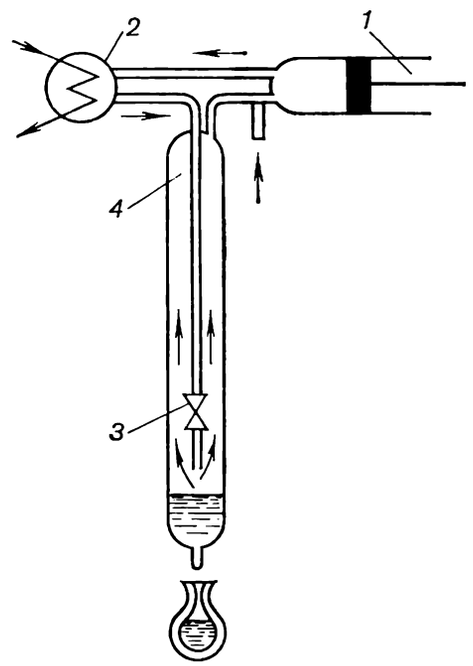

Fig. 13.22

the operation and maintenance of such installations.

Liquefaction installations based on the Linde gas liquefaction process are considerably more compact and simpler to operate.

The *Linde gas liquefaction method*, first suggested and carried out in 1895, ensures liquefaction by cooling a precooled gas during adiabatic throttling. The schematic diagram of a liquefaction plant based on the Linde process is shown in Fig. 13.22.

The gas to be liquefied is compressed in compressor *1* to a pressure p_1, cooled by a refrigerant in heat exchanger *2* and then delivered to expansion (throttling) valve *3*. As it passes through the latter valve, the gas is throttled to a pressure p_2 thus lowering its temperature (if the state of the gas before throttling is set below the inversion curve). However, this temperature is still far from the boiling point of the substance handled at the pressure p_2 usually equal to atmospheric pressure. This somewhat cooled gas is directed to heat-exchanger *4* where the gas is in counterflow past the pipeline through which gas is delivered to the expansion valve. The cooled gas then flows to the compressor. As a result of the regenerative heat transfer in the heat exchanger, the temperature of the gas flowing to the valve lowers; consequently, the temperature of the gas downstream from the expansion valve diminishes. In turn, this gas cools still more in the heat exchanger the portions of it

flowing to the expansion valve. The temperature of the gas downstream from the expansion valve drops still more, etc. The process is continued until gas temperature downstream from the expansion valve becomes equal to the saturation temperature at the pressure p_2. After this the temperature does not decrease, and the gas condenses at a constant temperature, with a two-phase mixture leaving the expansion valve. The liquid phase is separated and discharged from the liquefying plant, and the gas is returned to the condenser through the heat exchanger.

The heat exchanger *2* has to be used when the inversion point of the gas to be liquefied is below room temperature: in this case throttling of the gas will increase, not decrease the temperature. Therefore when oxygen is liquefied by the Linde process, it is precooled with liquid ammonia; when hydrogen is liquefied (the temperature of inversion of hydrogen is about 183 K), liquid nitrogen is used for precooling; and when helium is liquefied ($T_{\text{inv}} \cong 38$ K), it is precooled with liquid hydrogen.

Using the Linde process with precooling, the English scientist J. Dewar obtained liquid hydrogen for the first time in 1898. The Linde gas liquefaction process was also used to liquefy helium, the gas which has the lowest boiling point (4.2 K); liquid helium was obtained for the first time in 1908 by the Dutch physicist H. Kamerlingh Onnes.

In liquefaction plants based on the *Claude gas liquefaction process*, along with irreversible expansion upon adiabatic throttling, the gas to be liquefied undergoes adiabatic expansion with work transfer in an expander.

As has been shown in Sec. 7.6, adiabatic expansion with work transfer ensures a more effective cooling of a gas or liquid than adiabatic throttling. In accordance with Eq. (7.140),

$$\alpha_s > \alpha_i,$$

i.e.

$$\left(\frac{\partial T}{\partial p}\right)_s > \left(\frac{\partial T}{\partial p}\right)_i .$$

It follows that at the same values of p_1 and p_2 and the same initial gas temperature T_1, upon expansion, the temperature of the gas, T_2, obeys the following inequality:

$$T_2^{(s)} < T_2^{(i)}, \tag{13.39}$$

where the superscript "*i*" refers to adiabatic throttling, and "*s*" to adiabatic expansion with heat transfer.

As was already mentioned, the fact that a gas is cooled less upon adiabatic throttling than upon adiabatic expansion with work transfer is explained by the presence of inevitable losses due to the irreversibility of the throttling process.

The schematic layout of a liquefying plant (usually called *expander liquefiers*) based on the Claude gas liquefaction process is shown in Fig. 13.23. It differs from the Linde gas liquefying plant in that the throttling valve is replaced by expander *2*. Just as in a liquefier realizing the Linde gas liquefying process, the expander-type liquefier involves precooling of the gas, compressed in compressor *1*, in the counterflow regenerative heat exchanger *3*. The use of the heat exchanger (cooler) in the expander liquefier is not obligatory: since the expansion of a gas in the expander is always accompanied

by a drop in gas temperature, the gas can be liquefied without precooling by an external refrigerant.

This kind of precooling is practised in expander-type liquefiers only to cut down the starting time. It should be noted that expander-type helium liquefiers presently come in two models: with or without an external refrigerant (liquid nitrogen).

Expander-type liquefiers are usually operated with simultaneous throttling and expansion in the expander. The gas flow leaving the compressor *1*

Fig. 13.23

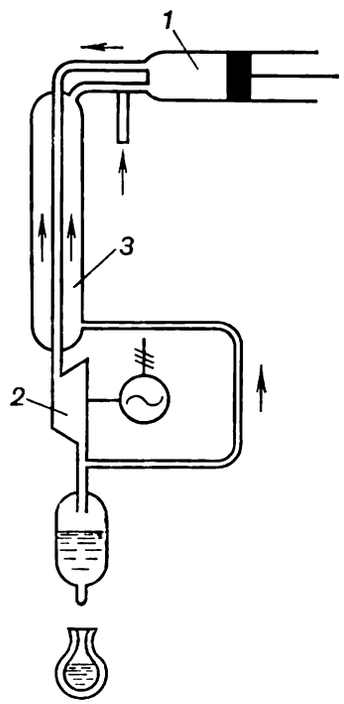

Fig. 13.24

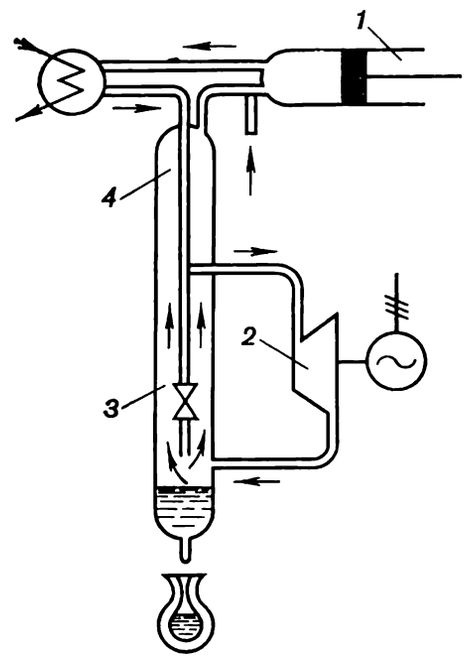

splits into two streams (Fig. 13.24): part of the gas is expanded in expander *2* and then flows to heat exchanger *4*, where it cools the other part of the gas flowing to the reducing valve *3*. The liquefied gas proper is produced by separating the liquid component of the two-phase mixture leaving the reducing valve.

It is clear that the expander-type liquefier is a thermodynamically more perfect and effective apparatus than the liquefier realizing the Linde gas liquefaction process: it requires only one working medium, although the introduction of the expander makes the plant more complex and increases its size.

The efficient performance of expander liquefiers depends to a great extent on the internal relative efficiency of the expander proper. The efficiency of modern reciprocating and turbine expanders falls within 0.8 to 0.85. The active-reactive turbine expanders, designed by the Soviet physicist P. L. Kapitza in the 1930's, are the main component of high-capacity liquefaction plants.

14

Humid air

14.1 Basic concepts

Mixtures of dry air* and water vapour, humid air, are encountered in a number of heat-engineering processes, particularly the process of drying. Thermal electric power stations far away from water-supply sources are often equipped with closed circuit-type cooling water systems. The design of such systems requires a knowledge of moist air properties.

Humid air is a special case of a gas mixture.

Why is it necessary to consider this special case of a gas mixture? Why cannot we use the general principles governing the behaviour of gas mixtures? Let us try to answer these questions.

Humid air at atmospheric or near atmospheric pressure in a temperature interval whose lower limit is not below —50 °C is of practical importance. At these conditions dry air can exist only as a gas, whereas water can exist as a vapour, liquid or solid, depending on mixture temperature. It follows that mixture of air and water vapour is such a mixture of gases one of whose components, water vapour, can undergo a change of phase (condense into a liquid or solid) with a drop in temperature, and precipitate from the mixture. Therefore, the amount of water vapour in such a mixture cannot be random; depending on the mixture's temperature and total pressure, the quantity of water vapour in moist air cannot exceed a certain value as we shall see below. It is precisely this property of humid air that distinguishes it from ordinary gas mixtures.

---

* By the term "dry air" we mean air containing no water vapour. It will be recalled that the molecular weight of air $\mu_{air} = 28.96$.

Since we shall consider humid air at comparatively low pressures (close to atmospheric), it is clear that with an accuracy sufficient for engineering calculations, both the dry air and the water vapour contained in it can be regarded as ideal gases.* When analyzing the thermodynamic properties of humid air, this assumption permits us to use the principles formulated for ideal gases in Sec. 1.4.

It will be recalled that, in accordance with Dalton's law, each individual gas component of a gas mixture behaves in the mixture as it would if it occupied the entire volume of the mixture at the mixture temperature, or, which is the same, the sum of the partial pressures of the components of a gas mixture is equal to the total pressure of the gas mixture.

Denoting the partial pressure of dry air by p_{air}, the partial pressure of

Fig. 14.1

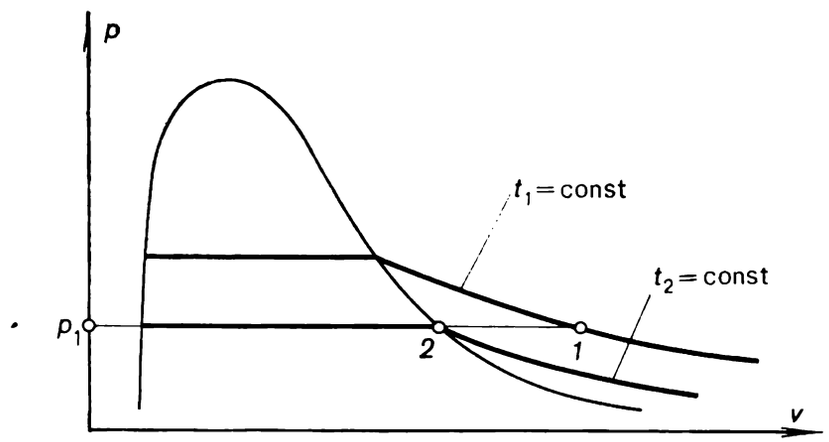

water vapour by p_v and the pressure of their mixture, i.e. humid air, by p, in accordance with Dalton's law we obtain:

$$p = p_{air} + p_v. \tag{14.1}$$

Since the pressure of moist air is usually equal to atmospheric pressure (B), we can write that

$$B = p_{air} + p_v. \tag{14.2}$$

The more water vapour there is in humid air, the higher the partial pressure of the water vapour in this mixture.

In moist air the partial pressure of water vapour cannot exceed p_s, the saturation pressure of moist air at a given temperature, i.e.

$$p_v \leqslant p_s. \tag{14.3}$$

The maximum partial pressure of the water-vapour component of humid air, p_s, is determined by the temperature of the mixture of air and water vapour and is independent of mixture pressure p.

---

* It is possible to make sure that this assumption is true in the following example. At $t = 50$ °C the saturation pressure of water vapour is 12.3 kPa (0.126 kgf/cm²) and, at these conditions, its specific volume $v'' = 12.05$ m³/kg. If follows that for this vapour $z = pv/RT$ equals 0.999, which differs by only 0.1% from the value of z for an ideal gas, $z_{ideal} = 1$. At temperature of 50 °C and atmospheric pressure the specific volume of air is 0.916 m³/kg. For air at these conditions, $z = 0.968$, which differs from z_{ideal} by 3.2%.

Humid air for which $p_v < p_s$ will be referred to as *unsaturated*, and humid air for which $p_v = p_s$, as *saturated humid air*. The water vapour in unsaturated humid air (i.e. the vapour for which $p_v < p_s$) is superheated. If the temperature of unsaturated air is reduced at a constant pressure, the saturation state can be attained (this is clear from the p-v diagram for water shown in Fig. 14.1). In the process of temperature reduction, the superheated vapour whose initial temperature is t_1 (point *1* on the p-v diagram in Fig. 14.1), will be cooled to temperature t_2 where vapour pressure corresponds to the state of saturation (point *2*); with a further reduction in temperature moisture will precipitate from the air and the partial pressure of vapour will diminish. This phenomenon is often encountered in everyday life: since atmospheric air always contains a certain amount of water vapour, a drop in temperature often causes the air to become saturated, and we see a mist or dew. The temperature at which the pressure p_v equals the pressure p_s is therefore called the *dew point*.

Moisture content. Absolute and relative humidity

Let us introduce a few new concepts to aid our study of humid air.

Mass moisture content d will mean the ratio of the mass of moisture contained in humid air, G_{moist}, to the mass of dry air, G_{air}:

$$d = \frac{G_{moist}}{G_{air}}. \tag{14.4}$$

It follows that d represents the mass of moisture (in kilograms) per unit mass (1 kg) of dry air*, or, which is the same, per $(1 + d)$ kg of moist air.

It sometimes is more convenient to use the number of moles of water vapour and of dry air. The *molar moisture content* x can then be defined as the ratio of the number of moles of water to the number of moles of dry air. The number of moles of water vapour in humid air equals G_{moist}/μ_{moist}, and the number of moles of dry air equals G_{air}/μ_{air}, where μ_{moist} and μ_{air} are the molecular masses of water and air. It follows that

$$x = \frac{\mu_{air} G_{moist}}{\mu_{moist} G_{air}}. \tag{14.5}$$

Since $\mu_{air} = 28.96$ and $\mu_{moist} = 18.016$, taking into account Eq. (14.4), we obtain:

$$x = 1.61d \tag{14.6}$$

and

$$d = 0.622x. \tag{14.7}$$

The quantities d and x characterize humid air which may contain water both as a vapour or as droplets of moisture or crystals of ice (snow).

For one mole of dry air Clapeyron's equation takes the form:

$$p_{air} V = \mu RT, \tag{14.8}$$

where V is the volume occupied by one mole of dry air.

---

* Moisture content d is sometimes expressed in grams of moisture per unit mass of dry air.

If the molar moisture content is x, then for x moles of water, occupying the same volume V, Clapeyron's equation takes the form:

$$p_v V = x\mu RT. \tag{14.9}$$

Dividing Eq. (14.9) by equation (14.8), we obtain:

$$x_v = \frac{p_v}{p_{air}} = \frac{p_v}{p - p_v}. \tag{14.10}$$

Thus, taking into account Eq. (14.2), we find that when humid air is at atmospheric pressure,

$$x_v = \frac{p_v}{B - p_v}. \tag{14.11}$$

Allowing for Eq. (14.7), we find that

$$d_v = 0.622 \frac{p_v}{p - p_v}, \tag{14.12}$$

and when humid air is at atmospheric pressure,

$$d_v = 0.622 \frac{p_v}{B - p_v}. \tag{14.13}$$

It snould be emphasized that if the quantities d and x determined from relationships (14.4) and (14.5) characterize humid air in which water may be both a vapour or droplets of moisture or crystals of ice (snow), Eqs. (14.10) and (14.13) refer only to the presence of moisture as a vapour, because only then can the equation for ideal gases (14.9) be applied. Therefore, the quantities d and x in these equations bear the subscript "v". The quantities d_v and x_v will be referred to as *vapour content.*

The partial pressure of water vapour, p_v, in humid air may vary from zero for dry air, to B for pure water vapour. It follows from Eqs. (14.11) and (14.13) that x_v and d_v change from zero (dry air) to infinity (pure water vapour whose temperature is equal to or greater than the saturation temperature at this pressure), respectively.

The maximum possible vapour content in humid air at a given temperature can be determined from Eqs. (14.10) to (14.13) substituting the vapour pressure p_v with its maximum value, i.e. with the saturation pressure at that temperature, p_s. Then

$$x_s = \frac{p_s}{B - p_s}, \tag{14.14}$$

$$d_s = 0.622 \frac{p_s}{B - p_s}. \tag{14.15}$$

It follows from Eqs. (14.14) and (14.15) that the maximum vapour content in humid air depends, first, on the pressure of the humid air (barometric pressure B) and, second, on the temperature of the moist air, since p_s is determined directly by temperature. Since the saturation pressure of water vapour increases with temperature, it follows that the higher the temperature of air, the greater its maximum vapour content.

When $p = B$, it follows from equations (14.14) and (14.15) that at a temperature of 100 °C, when the saturation pressure of water vapour is equal to barometric pressure, the quantities x_s and d_s tend to infinity (since the difference $(B - p_s)$ in the denominator becomes zero).

To facilitate our study of humid air, we shall now introduce the concept of relative humidity. Relative humidity is defined as the ratio of the partial pressure of water vapour contained in humid air to the saturation pressure of water vapour for the same temperature (i.e. to the maximum possible partial pressure of water vapour at that temperature):

$$\varphi = \frac{p_v}{p_s}. \tag{14.16}$$

The quantity φ is usually expressed as a percentage. Inasmuch as $0 \leqslant p_v \leqslant p_s$, we have $0 \leqslant \varphi \leqslant 100\,\%$. For dry air $\varphi = 0$, and for saturated air $\varphi = 100\,\%$.

The magnitude of relative humidity alone does not characterize the content of vapour in humid air; for this purpose, we must also know the temperature of humid air, determining directly the saturation pressure p_s. If the vapour content of air remains constant and air temperature rises, then the relative humidity of air diminishes, since the saturation pressure of water vapour increases with temperature.

Finally, the ratio

$$\psi = \frac{d_v}{d_s}, \tag{14.17}$$

referred to as the *degree of saturation* or the *saturation ratio*, is also used.

Taking into account Eqs. (14.13) and (14.15), we find that

$$\psi = \frac{p_v}{p_s}\,\frac{B-p_s}{B-p_v}, \tag{14.18}$$

or

$$\psi = \varphi\,\frac{B-p_s}{B-p_v}. \tag{14.19}$$

If the temperature of humid air is not too high, then p_s (and even more $p_v \leqslant p_s$) is small compared with B. Therefore, it may be assumed that

$$\psi \cong \varphi. \tag{14.20}$$

In addition to relative humidity, the concept of absolute humidity is sometimes used. *Absolute humidity* is defined as the partial pressure of water vapour, p_v, in humid air, usually expressed in mm Hg (it will be recalled that 1 mm Hg corresponds to 133.322 Pa). The term absolute humidity is sometimes given to the mass of water vapour contained in one cubic metre of humid air, expressed in grams.

Numerically, the partial pressure of water vapour, expressed in mm Hg, and the mass of water vapour per 1 m^3 of humid air, expressed in grams, are almost equal to each other; they are exactly equal at a temperature of 16.5 °C. We can prove this in the following way. Let us consider Clapeyron's equation for an amount of water vapour of mass G occupying volume V:

$$p_v V = G R_v T.$$

We know that in the above expression p_v must be expressed in pascals, V in cubic metres, G in kilograms, R_v in joules per kilogram per kelvin, and T in kelvins. But if p_v is expressed in mm Hg, and G in grams, this equation takes the following form:

$$\frac{p_v}{7.50 \times 10^{-3}}\,V = \frac{G}{10^3}\,R_v T.$$

Since p_v and G/V are the definitions of absolute humidity discussed above, it is clear that the temperature at which these two quantities are numerically equal, i.e. at which $p_v/(G/V) = 1$, is determined from this equation in the following way*:

$$T = \left(p\frac{V}{G}\right)\frac{10^6}{7.50\times 461} = \frac{10^6}{7.50\times 461} = 289.5\ \text{K},$$

i.e. 16.5 °C.

Let us now calculate the density of moist air.

In accordance with Eq. (1.62), the gas constant of a mixture of two ideal gases, dry air and water vapour, is determined from the expression

$$R_{mix} = \frac{8314}{r_{air}\mu_{air} + r_v\mu_v}, \tag{14.21}$$

where r_{air} and r_v are the volumetric fractions of dry air and water vapour, respectively, in the humid air. Since we know that the volumetric fractions of the components can be expressed as the ratio of the partial pressure of the gas in the mixture to the total mixture pressure,

$$r_{air} = \frac{p_{air}}{p} = \frac{p - p_v}{p} \quad \text{and} \quad r_v = \frac{p_v}{p}.$$

Taking into account the fact that

$$\mu_{air} = 28.96 \quad \text{and} \quad \mu_v = 18.016,$$

we find from Eq. (14.21) that

$$R_{mix} = \frac{8314}{\frac{p-p_v}{p}28.96 + \frac{p_v}{p}18.016},$$

or, transforming the denominator in the right-hand side of the equation we get:

$$R_{mix} = \frac{8314}{28.96 - 10.94\frac{p_v}{p}}. \tag{14.22}$$

Knowing R_{mix}, we shall write the equation of state for humid air:

$$\frac{p}{\rho} = \frac{8314T}{28.96 - 10.94\frac{p_v}{p}}; \tag{14.23}$$

thus,

$$\rho = \frac{28.96p - 10.94p_v}{8314T}. \tag{14.24}$$

It follows from Eq. (14.24) that the greater the humidity of air (i.e. the higher the partial pressure of water vapour in air, p_v), the smaller the density of air. Hence, moist air is always lighter than dry air.

---

* It will be recalled that $R_v = 461.43$ J/(kg-K).

Caloric properties of humid air

The enthalpy of $(1 + d)$ kg of humid air, denoted by I, is the sum of the enthalpy of 1 kg of dry air, i_{air}, and the enthalpy of the d kg of water vapour contained in this air:

$$I = i_{air} + i_v d. \tag{14.25}$$

In calculating the enthalpies of mixtures, it is important to use one reference point for the enthalpies of each of the components. It is customary to measure the enthalpy of water from the reference point 0 °C*. The enthalpy of dry air will also be measured from 0 °C.

We shall now calculate the enthalpy of each component of a mixture of air and water vapour. At a temperature t and pressure p the enthalpy of water vapour is determined from the equation

$$i_v = r\,(0\,°C) + \int_0^t c_p^v\,dt + \int_{p_0}^p \left(\frac{\partial i_v}{\partial p}\right)_T dp, \tag{14.26}$$

where r (0 °C) is the heat of vapourization at $t = 0$ °C, and c_p^v is the heat capacity of water vapour on the isobar $p_0 = 610.8$ Pa $= 0.006228$ kgf/cm². The last member in the right-hand side is the change in enthalpy with the increase in pressure on the isotherm t. Since water vapour can be treated here as an ideal gas and since the heat capacity and enthalpy of ideal gases do not depend on pressure, and for the given narrow temperature interval the heat capacity of water vapour in the state of an ideal gas, $c_{p_0}^v$, can be assumed to be constant [$c_{p_0}^v = 1.93$ kJ/(kg-K) $= 0.46$ kcal/(kg-K)], relationship (14.26) can be simplified thus:

$$i_v = r\,(0\,°C) + c_{p_0}^v\,t. \tag{14.27}$$

Inasmuch as r (0 °C) $= 2501$ kJ/kg $= 597.3$ kcal/kg, when enthalpy is measured in units of kJ/kg, we have

$$i_v = 2501 + 1.93t. \tag{14.28}$$

Correspondingly, when enthalpy is measured in units of kcal/kg, we have:

$$i_v = 597.3 + 0.46t. \tag{14.28a}$$

Dry air is also considered here to be an ideal gas. Given this assumption and in accordance with the selected reference point from which the enthalpy of dry air is measured, we can write

$$i_{air} = c_{p_0}^{air} t. \tag{14.29}$$

For the given temperature interval the quantity $c_{p_0}^{air} = 1$ kJ/(kg-K) $=$ $= 0.24$ kcal/(kg-K) and, thus, when i is measured in units of kJ/kg,

$$i_{air} = t, \tag{14.30}$$

* As was mentioned in Sec. 6.2, in accordance with the decision of the 6th International Steam Table Conference (1963), the zero reference point for measuring the caloric properties of water was selected in the following way: it was assumed that the internal energy of water at the triple point (0.01 °C) was equal to zero. Then, the enthalpy of water at 0 °C is equal to —0.0416 kJ/kg (—0.009 94 kcal/kg). Consequently, for engineering calculations the enthalpy of water may be assumed to be zero at 0 °C.

and when i is measured in units of kcal/kg,

$$i_{air} = 0.24t. \tag{14.30a}$$

Taking Eqs. (14.28) and (14.30) into account, we find that the formula (14.25) for the enthalpy of humid air takes the following form:

$$I = t + d_v (2501 + 1.93t) \tag{14.31}$$

if I is expressed in kJ/kg, and, correspondingly,

$$I = 0.24t + d_v (597 + 0.46t) \tag{14.31a}$$

if I is expressed in kcal/kg.

As these equations show, the enthalpy of dry air is independent of pressure; this is to be expected, since the components of the mixture are assumed to be ideal gases not reacting with each other.

It will be recalled that enthalpy I is referred here to 1 kg of dry air or to $(1 + d)$ kg of moist air.

Generally, humid air may contain moisture not only in the vapour state, but also in the form of a liquid (mist) or a solid (ice or snow). The moisture content d can then be expressed as follows:

$$d = d_v + d_l + d_s, \tag{14.32}$$

where d_l and d_s represent the content of water and ice, respectively, and by analogy with Eq. (14.25) the expression for the enthalpy of such air can be written in the form

$$I = i_{air} + d_v i_v + d_l i_l + d_s i_s, \tag{14.33}$$

where i_l and i_s are the enthalpies of water and ice, respectively.

At temperatures in the 0-100 °C interval the heat capacity of water can be assumed to be $c_p^w = 4.19$ kJ/(kg-K) = 1 kcal/(kg-K). Then the enthalpy of the water contained in air, $i_l = c_p^w t$, can be expressed in the following form:

$$i_l = 4.19t \text{ (kJ/kg)} \tag{14.34}$$

and

$$i_l = t \text{ (kcal/kg)}. \tag{14.34a}$$

At 0 °C the enthalpy of ice is less than the enthalpy of water at the same temperature (and the enthalpy of water is assumed equal to zero) by the heat of ice melting, 335 kJ/kg = 80 kcal/kg, i.e. the enthalpy of ice at 0 °C is negative and equals i_s (0 °C) = —335 kJ/kg = —80 kcal/kg. The heat capacity of ice is approximately $c_p^s = 2.1$ kJ/(kg-K) = 0.5 kcal/(kg-K). Hence, at temperature t the heat capacity of ice is

$$i_s(t) = i_s(0\,°C) + c_p^s t$$

or

$$i_s(t) = -335 + 2.1t \text{ (kJ/kg)} \tag{14.35}$$

and

$$i_s(t) = -80 + 0.5t \text{ (kcal/kg)}. \tag{14.35a}$$

Taking into account Eqs. (14.31), (14.34) and (14.35), we find that q. (14.33) gives:

$$I = t + d_v(2501 + 1.93t) + 4.19d_l t + d_s(-335 + 2.1t) \text{ (kJ/kg)} \tag{14.36}$$

and

$$I = 0.24t + d_v (597 + 0.46t) + d_l t + d_s (-80 + 0.5t) \text{ (kcal/kg)}. \quad (14.36a)$$

When air contains water or ice, it has a maximum possible vapour content, i.e. at $d_l > 0$ or $d_s > 0$, we have $d_v = d_s$.

Psychrometer

Humidity is often measured with the aid of an instrument called the *psychrometer*. It consists of dry-bulb and wet-bulb mercury-in-glass thermometers. The wet-bulb thermometer is covered with a wet cloth. When a stream of

Fig. 14.2

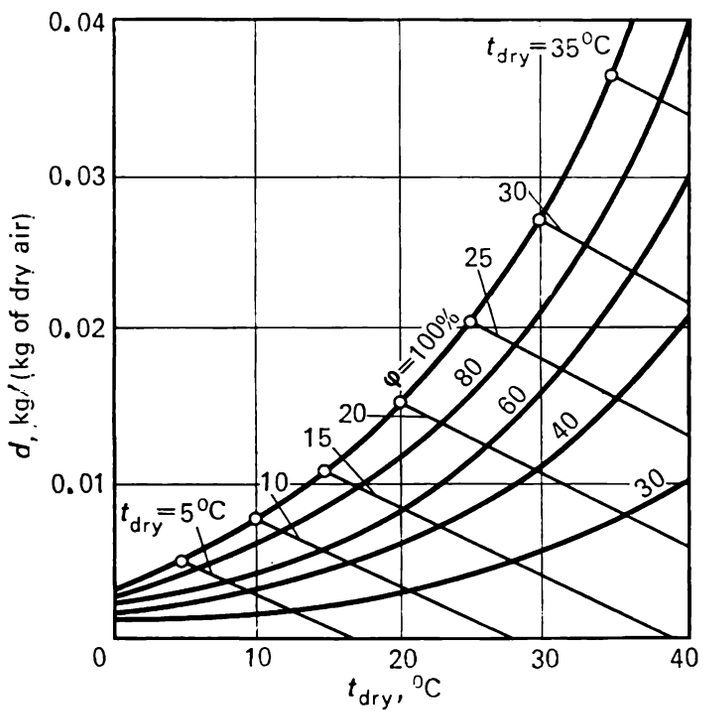

humid air flows past the bulbs of these thermometers, the dry-bulb thermometer gives the temperature of the humid air. The wet bulb thermometer gives the temperature of the water contained in the moistened cloth. It is clear that when air steadily flows past the wet-bulb thermometer, the water evaporates from the surface of the wet cloth (if only the moist air is not saturated), with the rate of water evaporation being greater, the drier the stream of air flowing past the wet cloth (i.e. the lower the pressure of the water vapour contained in the air). Inasmuch as the moisture is evaporated by an amount of heat equal to the heat of water vapourization removed primarily from the water proper, the temperature of the wet cloth will drop. If there were no heat transfer to the wet-bulb thermometer from the surrounding layers of air, the temperature of the wet cloth would drop to the water saturation temperature at the partial pressure of vapour in the given air, i.e. equal to the dew point for the given partial pressure of water vapour. The water wetting the cloth will then cease to evaporate, and the temperature will remain constant in time. Having measured this dew-point temperature and finding the corresponding water-vapour saturation pressure (with the aid

of a table or a p_s-T_s diagram plotted for water), we can determine the partial pressure of water vapour in humid air and, consequently, the humidity of the air.

Actually, with a decrease in the wet-cloth temperature, due to the increasing difference between the temperatures of the ambient air and of the water wetting the cloth, heat flows from the closest layers of the surrounding air to the wet cloth. The resulting equilibrium (constancy of wet-cloth temperature) is at the dew-point temperature, but at a somewhat higher temperature known as the *wet-bulb temperature.*

The difference between the dry-bulb temperature t_{dry} and the temperature on the wet-bulb thermometer, t_{wet}, is proportional to air humidity. The drier the air, the greater the difference $t_{dry} - t_{wet}$. But if the air is saturated with vapour, then $t_{dry} = t_{wet}$ since the partial pressure of water vapour in the air is equal to the saturation pressure of water vapour at that temperature t_{dry}.

The dependence of the moisture content of air, d, on dry-bulb temperature t_{dry} and wet-bulb temperature t_{wet} is established by experiment, and experimental results are used to plot special psychrometric diagrams (Fig. 14.2) or compile psychrometric tables. These tables and diagrams permit the moisture content in air to be easily determined by the readings of a psychrometer.

14.2 *I-d* diagram for humid air

If the enthalpy of humid air, I, is plotted along the vertical axis and the moisture content d along the horizontal axis, we obtain an I-d diagram which greatly simplifies calculations of humidity; the diagram particularly facilitates the determination of parameters and the study of the drying processes. A rectangular I-d diagram for humid air is shown in Fig. 14.3. The values of enthalpy i plotted on this diagram as a function of d for various temperatures are calculated from Eq. (14.31).

Let us consider the isotherms of saturated air plotted on this diagram. Differentiating Eq. (14.25) with respect to d_v at t = const and taking Eq. (14.27) into account, we obtain:

$$\left(\frac{\partial I}{\partial d_v}\right)_t = r\,(0\ ^\circ\mathrm{C}) + c_{p0}^{v} t. \tag{14.37}$$

It is clear from Eq. (14.37) that on the I-d diagram the isotherms of non-saturated air are straight lines, since the slopes $(\partial I/\partial d_v)_t$ are constant for the given temperatures. It also follows from this equation that the higher the temperature, the steeper the isotherm (Fig. 14.3). The slope of the isotherm 0 °C is the smallest, emerging, as can be seen from Eq. (14.31), from the origin of coordinates.

In order to plot the saturation line for humid air on this diagram (line $\varphi = 100\,\%$), the magnitude of d_s must be determined for each temperature. The point on this isotherm corresponding to d_s will be the saturation line. The magnitude of d_s is determined from relationship (14.15) by the atmospheric pressure B and saturation pressure for water vapour, p_s. The saturation moisture content d_s will vary for different isotherms. It will be recalled that the higher the temperature, the greater d_s is. Hence, on the I-d diagram the

saturation line of humid air will always have a positive slope, as shown in Fig. 14.3*.

Figure 14.3 shows that the isotherms of non-saturated air (between the saturation line and the isotherm 100 °C) occupy a narrow strip on the diagram. As follows from Eq. (14.31), the enthalpy of humid air varies greatly with d_v, but comparatively little with a change in air temperature. Thus, for $d = 0$ the enthalpy of air at 0 °C is zero and for 100 °C it is

Fig. 14.3

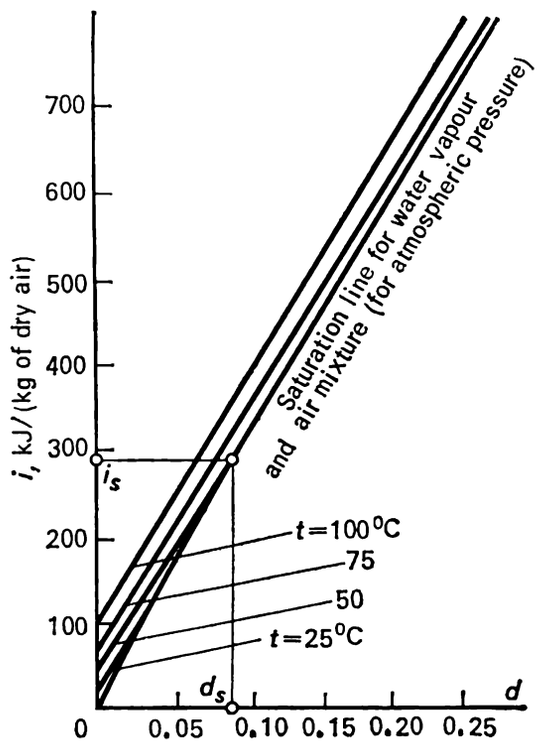

100 kJ/(kg of dry air), whereas for $d = 0.5$ the enthalpy of air at 0 °C is 1250 kJ/(kg of dry air) and for 100 °C it is 1447 kJ/(kg of dry air). As drawn, the diagram is inconvenient, since the region of non-saturated air, which is most important for practical calculations, is too narrow. Any attempt to increase the scale of enthalpy along the ordinate axis stretches the diagram vertically. Therefore, an *I-d* diagram whose horizontal axis corresponds to the isotherm 0 °C is most convenient. The axis d is then inclined to the horizontal axis at an angle α whose tangent is determined from relationship

* The saturation line plotted in Fig. 14.3 is for a barometric pressure 98 kPa = = 1 kgf/cm²; for other pressures

$$d_s = 0.622 \frac{p_s}{p - p_s},$$

where p is the pressure of moist air. It is clear that the higher p is, the smaller is d_s on this diagram. Therefore, the greater p is, the higher is the saturation line on the *I-d* diagram.

As for the isotherms of non-saturated air to the left of the saturation line, as was mentioned in Sec. 14.1, the enthalpy of humid air is independent of pressure. Hence, the isotherms are equal for various pressures of humid air (provided these pressures are not too high, so that the assumption that humid air can be regarded an ideal gas remains valid).

(14.37) when $t = 0$ °C, i.e. $\left(\frac{\partial I}{\partial d_v}\right)_{0\,°C} = 2501$ kJ/(kg of dry air) = = 597 kcal/(kg of dry air). Thus, the diagram *I-d*, illustrated in Fig. 14.4,

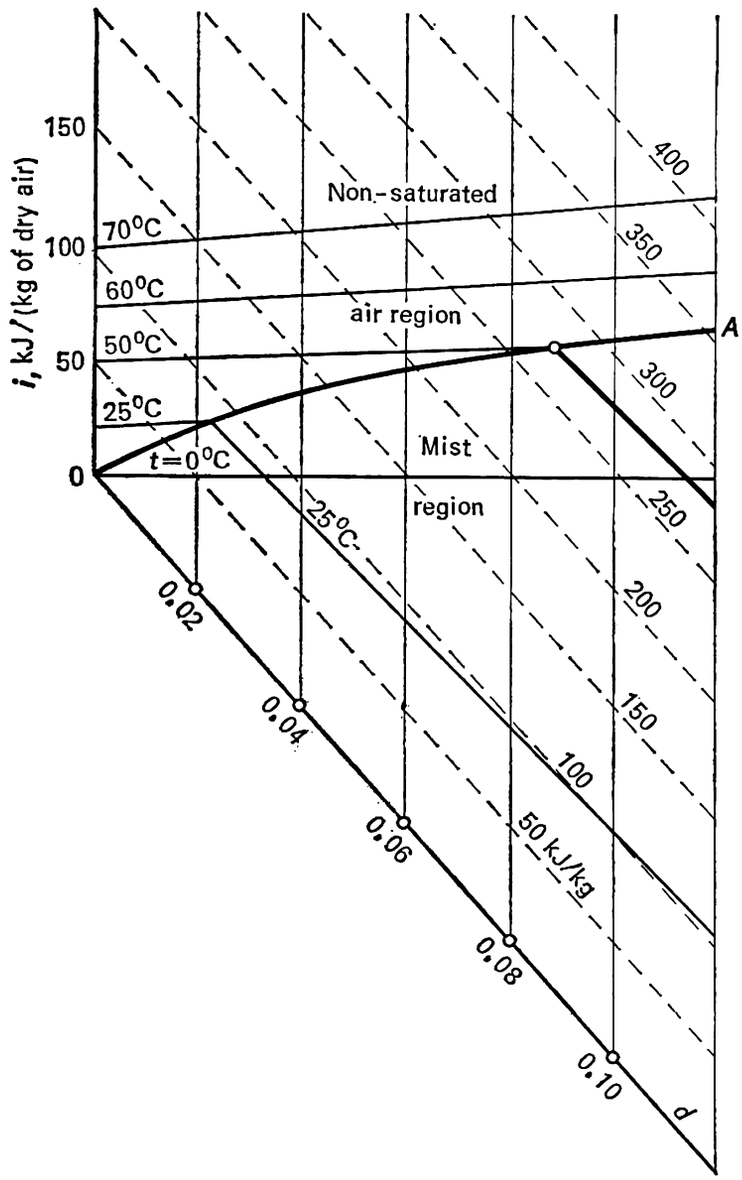

Fig. 14.4

is oblique. As can be seen from the illustration, the region of non-saturated air occupies a considerably greater area on this diagram than on the rectangular diagram. On the oblique *I-d* diagram, the lines d = const are vertical and parallel to the i-axis.

On the oblique *I-d* diagram, the isenthalpies (dotted lines in Fig. 14.4) run parallel to the d-axis, i.e. are located at the same angle α. The slope of the isotherms in the oblique system of coordinates also increases with rising temperature, with the slope of the isotherm 0 °C being equal to zero.

On the oblique *I-d* diagram, the humid-air saturation line (line *OA* in Fig. 14.4) is plotted exactly as described for the rectangular *I-d* diagram.

In accordance with Sec. 14.1, at atmospheric pressure and $t = 100$ °C $d_s = \infty$. Hence, at atmospheric pressure the humid-air saturation line on

the I-d diagram will approach asymptotically the isotherm 100 °C with increasing temperature.

As has been already mentioned, injection of water into a saturated mixture of air and water does not cause an increase in the vapour content: it is already at its maximum and the moisture will condense forming a mist. Correspondingly, on the I-d diagram, the region of saturated air will be to the right of the saturation line (the *mist region*). If the isotherm of humid air is continued to the right of the saturation line, then, although d increases, d_v remains constant and equal to d_s and, consequently, d increases only because of the increase in d_l (the solid phase precipitates only at $t \leqslant 0$ °C, therefore, at $t > 0$ °C we have $d_s = 0$).

Let us now determine the arrangement of isotherms in the region of saturated air (mist region). Differentiating Eq. (14.36) with respect to d for t = const, and allowing for $d_v = d_s$ = const and $d_s = 0$, we obtain:

$$\left(\frac{\partial I}{\partial d}\right)_t = 4.19t \tag{14.38}$$

if I is expressed in units of kJ/kg, and

$$\left(\frac{\partial I}{\partial d}\right)_t = t \tag{14.38a}$$

if I is expressed in units of kcal/kg.

It is clear that in the saturated air region the isotherms are straight lines whose slopes are greater the higher the temperature is. It follows from Eqs. (14.37) and (14.38) that when crossing the saturation line an isotherm has a discontinuity, with the slope of the isotherm in the saturated air region being smaller than in the non-saturated air region. It also follows from Eq. (14.38) that in the mist region the isotherm 0 °C coincides with the isenthalpy and since the temperature is usually not very high, the isotherms with $t > 0$ °C are also very close to the isenthalpies with respect to their direction* (Fig. 14.4, isotherms 25 °C and 50 °C).

Let us now consider humid air cooled to $t = 0$ °C. The region of the isotherm 0 °C on the I-d diagram is shown in Fig. 14.5. The process of heat rejection at constant temperature $t = 0$ °C from saturated humid air not containing droplets of water will apparently proceed along an isotherm in the mist region. However, this process is complicated by the fact that, depending on the rate of heat transfer, either droplets of water or particles of ice may appear in the vapour. For any given value of d, the enthalpy of humid air will, of course, be smaller when the air contains particles of ice and not droplets of water, with the decrease in enthalpy corresponding to the magnitude of the heat of ice melting.

It follows that for air containing only particles of ice the slope of the isotherm 0 °C of the region of mist will exceed the slope of the isotherm plotted for air containing only droplets of water (lines *ab* and *ac*, respectively,**

---

* It was mentioned above that when the I-d diagram is plotted for humid air at different pressures, the moist-air saturation lines occupy different positions. For each of the pressures, i.e. for each position of the saturation line, the isotherms of the mist region must be plotted anew.

** We should not be surprised by the fact that on the I-d diagram in Fig. 14.4 the saturation line crosses the isotherm 0° C practically at the origin of coordinates, and on the I-d diagram in Fig. 14.5 the same saturation line approaches the isotherm 0 °C at a finite value of d. This stems from the different scales taken for the d-axis on the two

in Fig. 14.5), and the vertical distance between these two isotherms will be equal to the product of the heat melting the ice and the content of ice in the air.

The region of states for humid air-mist, containing both water and particles of ice, is arranged between these two isotherms. T

At $t < 0$ °C moisture can be present in air only as vapour or ice. Taking into account that in this case $d_v = d_s$ and $d_l = 0$, we obtain from Eq. (14.36)

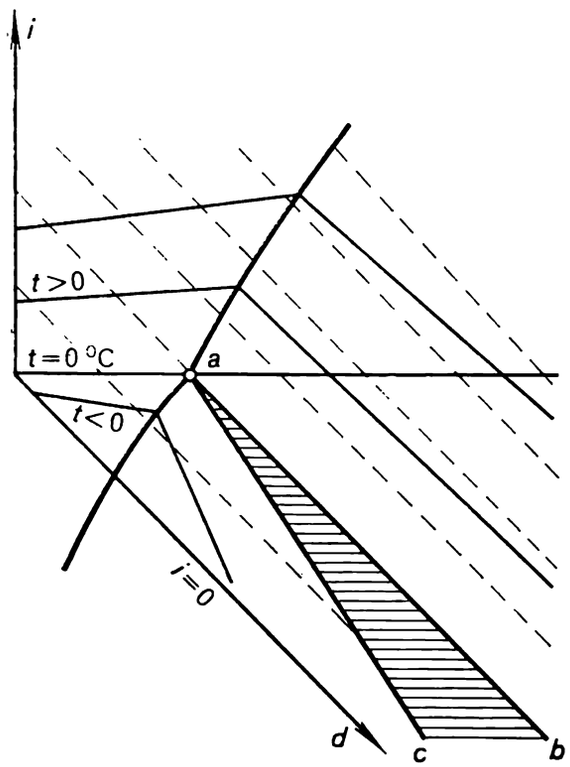

Fig. 14.5

for the mist region:

$$\left(\frac{\partial I}{\partial d}\right)_t = -335 + 2.1t \tag{14.39}$$

if I is expressed in units of kJ/kg, and

$$\left(\frac{\partial I}{\partial d}\right)_t = -80 + 0.5t \tag{14.39a}$$

if I is expressed in units of kcal/kg.

It follows that for $t < 0$ °C the mist isotherms are considerably steeper than the mist isotherms for $t > 0$ °C (Fig. 14.5). At $t = 0$ °C the saturation line has a point of inflection. The I-d diagram is widely used in engineering because it is very convenient when a substance is being dried. The air used to dry the substance absorbs moisture and its moisture content naturally increases. Only non-saturated air is suitable for drying processes; moreover,

diagrams. In fact, inasmuch as for water vapour at 0 °C we have $p_s = 610.8$ Pa (0.006-228 kgf/cm²), in accordance with Eq. (14.15), at atmospheric pressure, and $t = 0$ °C we find that $d_s = 0.0039$ (kg of moist)/(kg of dry air) [or 3.9 (g of moist)/(kg of dry air)]. This value is practically zero on the scale of the diagram shown in Fig. 14.4, while in Fig. 14.5 the d-axis is drawn on much greater scale.

it is desirable that its initial moisture content be as small as possible. From this point of view the analysis of the cooling of humid air, aided by the *I-d* diagram (Fig. 14.6), is of great interest.

Let us assume that on the *I-d* diagram the initial state of humid air is represented by point *I* (temperature t_I and moisture content d_I). Heat is transferred from the humid air, which thereby cools to a temperature t_{II}. As air is cooled, its moisture content does not change and, consequently,

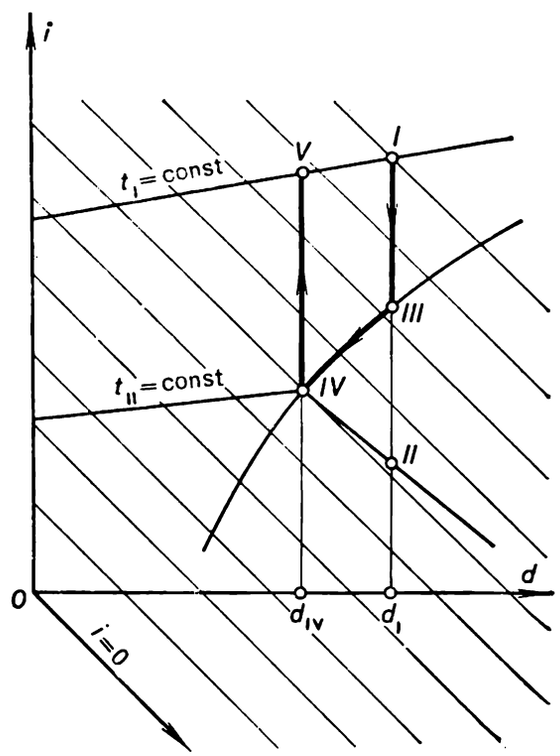

Fig. 14.6

this process can be represented by the vertical line *I-II*. Point *II* (the end of the cooling process) corresponds to temperature t_{II} and moisture content $d_{II} = d_I$. As can be seen in Fig. 14.6, the straight line *I-II* crosses the humid air saturation line at point *III* (dew point for air in the state *II*). When moist air is cooled below point *III*, the water vapour contained in this moist air will condense and precipitate as mist. State *II* is located in the mist region and represents the mixture of saturated air in state *IV* and water. The water state cannot be presented on the diagram (this state lies at infinity since $d = \infty$). If the water suspended in humid air is removed in the state of mist,

$$d_l = d_{III} - d_{IV} = d_I - d_{IV},$$

we shall get saturated air in the state *IV* corresponding to temperature t_{II} and moisture content d_{IV}. By heating this air we can reach state *V*, lying on the initial isotherm t_I but with a smaller moisture content $d_{IV} < d_I$. This process, illustrated on the *I-d* diagram, is an elementary way of decreasing the moisture content of air.

15

Fundamentals of chemical thermodunamics

The basis of chemical thermodynamics is the first and second laws of thermodynamics and the Nernst heat theorem* applied to processes of chemical transformation.

The application of the first law of thermodynamics to chemical processes has created a separate branch of science, *thermochemistry*, which permits us to solve such important practical problems as the determination of the thermal effects (of heats) of reactions and their dependence on the conditions under which the reactions proceed.

Under the necessary conditions any chemical process can be brought to a state of stable equilibrium. For the same reaction the state of equilibrium depends on a number of conditions, particularly temperature. By studying the states of chemical equilibrium on the basis of the second law of thermodynamics, it is possible to determine both the conditions under which the required chemical process can proceed and the limits to which it can be brought, i.e. determine the equilibrium composition.

The importance of studying the conditions of equilibrium will be illustrated by the following example. The combustion of carbon in atmospheric oxygen causes the formation of end products CO and CO_2. Upon contact with red-hot carbon (for example, in a layer, or bed, of coal through which hot air is blown) the proportions of CO and CO_2 may vary sharply, depending on temperature. Thus, at a temperature above 800 °C the proportion of CO_2

* The essence of the Nernst heat theorem is given below.

is over 80 % and that of CO is, correspondingly, less than 20 %. But at a temperature below 550 °C the proportions of CO and CO_2 are reversed. It is clear that the proportions of CO and CO_2 in the products of combustion are extremely important. When fuel is burned in the furnace of a boiler, attempts should be made to ensure as complete a combustion as possible (i.e. as high a fraction of CO_2 as possible in the products of combustion) in order to burn fuel efficiently as possible. On the other hand, when operating a gas generator producing a combustible gas, measures should be taken to ensure incomplete combustion (i.e. more CO and less CO_2 in the produced gas). In order to oxidize carbon most effectively, the process must be carried out under the proper conditions in both cases. Naturally, these conditions will differ for the two cases, and to ensure a correct selection of the conditions, chemical equilibrium must be studied.

15.1 Thermochemistry. Hess's law. Kirchhoff's equation

As we know, chemical reactions can be classified either as *exothermic*, i.e. liberating heat, or *endothermic*, i.e. absorbing heat. For a process accompanied by chemical transformations, the first law of thermodynamics takes the following form [see Eq. (2.25)]:

$$dQ = dU + p\,dV + dL^*,$$

where $p\,dV$ is the differential of work of expansion, and dL^* is the differential of other work performed during a chemical reaction (for example, electrical work, magnetic work, and work done by light).

We already mentioned that the choice of sign for heat and work is arbitrary. Although in thermochemistry Q is often assumed to be positive when a system releases heat during a reaction, we shall again consider the heat added to a system and the work done by the system positive.

The *heat of reaction* is the amount of heat released (in an exothermic reaction) or absorbed (in an endothermic reaction) at constant V and T or at constant p and T provided only work of expansion is performed by the given system ($dL^* = 0$). In accordance with this definition, chemical thermodynamics uses two kinds of heats of reactions: the heat of reaction of an isochoric-isothermal reaction, Q_v, and that of an isobaric-isothermal reaction, Q_p.

The reader should not be surprised that these processes occur for two constant parameters, V and T or p and T. If no chemical changes took place in the system, the constancy of any two parameters would mean that the process cannot take place and the state of the system would be represented by a corresponding point, for instance, on a p-V or T-S diagram. But where chemical transformations take place, the given system possesses at least one more variable parameter, determined by its composition. Therefore processes which occur at two constant parameters, especially for V = const and T = const or for p = const and T = const, are possible. In this respect, a chemical reaction is similar to the process of change of phase, for example, evaporation, occurring at a constant pressure and temperature.

The work of expansion in an isochoric-isothermal process is zero and, since it is assumed that $dL^* = 0$, the equation of the first law of thermodynamics takes the form:

$$dQ_v = dU$$

or

$$Q_v = U_2 - U_1. \tag{15.1}$$

For an isobaric-isothermal reaction*,

$$dQ_p = dU + p\,dV = d\,(U + pV) = dI$$

or

$$Q_p = I_2 - I_1. \tag{15.2}$$

Thus, the heat of reaction of an isochoric-isothermal process is determined by the change in the internal energy of the system, and the heat of reaction of an isobaric-isothermal process is determined by the change in system enthalpy. Inasmuch as internal energy and enthalpy are functions of state, the values of Q_v and Q_p are determined directly by the corresponding initial and final states of the system.

This is the basis of the law discovered by the Russian chemist G. H. Hess. *Hess's law*** can be formulated as follows:

The resultant heat change in a chemical reaction consisting of several intermediate stages does not depend upon the stages or upon their sequence but is determined only by the initial and final states of the system.

Hess's law can also be expressed in the following way: if by means of chemical transformations a system undergoes a cyclic process at a constant temperature and volume or constant temperature and pressure, the algebraic sum of the heats of reaction must be equal to zero. This statement of Hess's law requires no further explanations, since we know that as a result of a cyclic process the functions of state remain constant; for instance, for a cyclic process, $\Delta U = 0$ and $\Delta I = 0$, meaning that, as was shown above, the algebraic sum of the heats of reactions must be equal to zero.

Hess's law can be used to solve many important practical problems, such as determining the magnitude of the heats of reactions, which cannot be easily determined by experiment, on the basis of known heats of some other reactions. Let us consider one example. Suppose we have to determine the heat of the reaction of incomplete combustion of carbon at constant pressure:

$$C + \frac{1}{2}O_2 = CO + Q_p,$$

Suppose that the heats of two other reactions proceeding at p = const = = 760 mm Hg = 101.325 kPa and t = const = 25 °C are known, namely

$$\text{for } C + O_2 = CO_2, \quad Q_p = -393\,785 \text{ kJ/kmol } (-94\,054 \text{ kcal/kmol}):$$

$$\text{for } CO + \frac{1}{2}O_2 = CO_2, \quad Q_p = -283\,187 \text{ kJ/kmol } (-67\,638 \text{ kcal/kmol}).$$

---

* For this reaction $V\,dp = 0$.

** It should be noted that this law was formulated by Hess independently from the law of conservation of energy and was of great practical importance at the time. Now we consider it as a corollary of the first law of thermodynamics.

To solve these kinds of problems, let us imagine the following isobaric-isothermal cyclic process:

$$\begin{array}{ccc} C+O_2 & \xrightarrow{Q_{p1}} & CO+\frac{1}{2}O_2 \\ \uparrow & & \downarrow \\ & \xleftarrow[Q_{p3}]{} CO_2 \xleftarrow[Q_{p2}]{} & \end{array}.$$

But in accordance with Hess's law,

$$Q_{p1}+Q_{p2}+Q_{p3}=0;$$

thus, the unknown heat of reaction is determined as follows:

$$Q_{p1}=-Q_{p2}-Q_{p3}=283\,187-393\,785=$$
$$=-110\,598 \text{ kJ/kmol CO } (-26\,416 \text{ kcal/kmol CO}).$$

Hess's law has a number of obvious important corollaries such as the following:

(1) The heat of formation of a compound from initial substances does not depend on the method of production. It can easily be seen that this is merely a somewhat different formulation of the first statement of the law given above.

(2) The quantity of heat which must be supplied to decompose a compound into its elements is equal to the heat evolved when that compound is formed from its elements. (This fact was first observed by A. L. Lavoisier and P. S. Laplace in 1780.)

(3) The difference between the heats of reaction involved in the transformation of two different systems into identical reaction products is equal to the heat of reaction involved in the transition of one system into the other. Or, the difference between the heats of two reactions involved in the transformation of two identical chemical systems into different reaction products is equal to the heat of the reaction involved in the transition of the products of one reaction into the products of the other. Since thermodynamic tables often give the values of the heats of reaction involved in the formation of substances from elements in an isobaric-isothermal process under standard conditions (p = 760 mm Hg = 101.325 kPa and t = 25 °C), this corollary of Hess's law can be formulated as follows: the heat of reaction is equal to the algebraic sum of the heats of formation of reaction products minus the sum of the heats of formation of the initial substances, i.e.

$$Q_p=\sum_{i=1}^{n}(Q_{p(i)\,\text{form}})_{\text{prod}}-\sum_{j=1}^{k}(Q_{p(j)\,\text{form}})_{\text{init}}. \tag{15.3}$$

Tables sometimes contain the values of heats of combustion for various substances and usually for isobaric-isothermal processes, assuming that complete combustion takes place under standard conditions. Here, the third corollary of Hess's law can be formulated as follows: the heat of reaction is equal to the algebraic sum of the heats of combustion of the initial substances minus the sum of the heats of combustion of reaction products, i.e.

$$Q_p=\sum_{j=1}^{k}(Q_{p(j)\,\text{comb}})_{\text{init}}-\sum_{i=1}^{n}(Q_{p(i)\,\text{comb}})_{\text{prod}}. \tag{15.4}$$

Let us consider the following example. Suppose it is necessary to determine the heat if reaction in the synthesis of ammonia chloride from ammonia and hydrogen chloride of the heats of formation of the three reactants from simple substances are known. The reaction

$$NH_3 + HCl = NH_4Cl + Q_p$$

in which the unknown quantity is Q_p, can be presented in the form shown in Fig. 15.1.

According to Hess's law,

$$Q_p = Q_{p1} + Q_{p2} + Q_{p3}.$$

But

$$Q_{p1} = -(Q_{p\,\mathrm{form}})_{NH_3}, \quad Q_{p2} = -(Q_{p\,\mathrm{form}})_{HCl},$$

$$Q_{p3} = (Q_{p\,\mathrm{form}})_{NH_4Cl},$$

and hence,

$$Q_p = (Q_{p\,\mathrm{form}})_{NH_4Cl} - (Q_{p\,\mathrm{form}})_{NH_3} - (Q_{p\,\mathrm{form}})_{HCl}.$$

Fig. 15.1

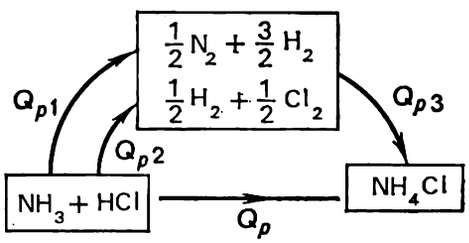

Fig. 15.2

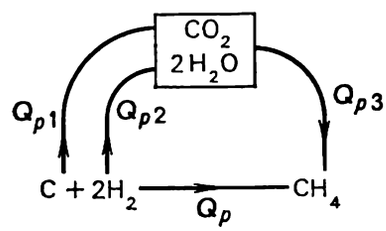

Let us take another example. Knowing the heats of combustion of C, H_2 and CH_4, we shall determine the heat of reaction in methane synthesis (Fig. 15.2):

$$C + 2H_2 = CH_4 + Q.$$

According to Hess's law,

$$Q_p = Q_{p1} + Q_{p2} + Q_{p3}.$$

But since

$$Q_{p1} = (Q_{p\,\mathrm{comb}})_C, \quad Q_{p2} = (Q_{p\,\mathrm{comb}})_{2H_2},$$

$$Q_{p3} = -(Q_{p\,\mathrm{comb}})_{CH_4},$$

we get:

$$Q_p = (Q_{p\,\mathrm{comb}})_C + (Q_{p\,\mathrm{comb}})_{2H_2} - (Q_{p\,\mathrm{comb}})_{CH_4}.$$

These two examples explain the corollaries of Hess's law.

The heats of reaction Q_v and Q_p are usually different because only work of expansion can be done in an isobaric-isothermal process. It is understood that the work of expansion will differ from zero only if the system undergoes expansion. For all practical purposes the volume of a system undergoing an isobaric-isothermal process changes as a result of the change in the number of moles of the gaseous reactants.

Let us see what happens when all reactants possess the properties of an ideal gas. Let the total number of moles of the initial substances of reaction be ν_{init}, and the total number of moles of the products of reaction be ν_{prod}. The reaction causes a change in the number of moles $\Delta\nu = \nu_{prod} - \nu_{init}$. It follows from Clapeyron's equation (1.23), which for ν moles of an ideal gas takes the form

$$pV = \nu\mu RT, \tag{15.5}$$

where V is the volume occupied by ν moles, that for a reaction proceeding at $dT = 0$ and $dp = 0$,

$$L = p\,(V_2 - V_1) = \Delta\nu\mu RT, \tag{15.6}$$

where the subscripts "1" and "2" refer to states before and after the reaction respectively. Assuming that $\mu R \cong 8.4$ kJ/(kmol-K) [2 kcal (kmol-K)], we find that

$$L = 8.4\Delta\nu T \text{ (kJ)}. \tag{15.7}$$

Since, in accordance with Eqs. (2.39), (15.1) and (15.2),

$$Q_p = \Delta U + p\,(V_2 - V_1) = Q_v + L, \tag{15.8}$$

we find that

$$Q_p - Q_v = 8.4\Delta\nu T \text{ (kJ)}. \tag{15.9}$$

Equation (15.9) is true for gaseous reactants possessing the properties of an ideal gas. The quantity $8.4\Delta\nu T$ can be positive, negative or equal to zero depending on whether the number of moles of the reactants changes, and if so, in what way. It is clear that for $\Delta\nu > 0$ we get $Q_p > Q_v$, and for $\Delta\nu < 0$, we get $Q_p < Q_v$, for $\Delta\nu = 0$, we get $Q_p = Q_v$.

Let us now examine the dependence of the heats of reaction on the parameters characterizing the state of the system. Experience shows that the heats of reaction change with a change in system parameters, and especially with a change in temperature. An analysis of the heats of reaction and a knowledge of the dependence of caloric values on temperature would lead to the same conclusion.

In fact, by definition, the heats of reaction, Q_v, and Q_p, are the differences between the respective internal energies and enthalpies of the products of reaction and the initial products. For example, we know that the internal energy and enthalpy of ideal gases change with temperature. To a great extent this dependence is determined by the valency of the gas molecules, and there is no reason to believe that the temperature dependence of internal energy U and enthalpy I will be the same both for the initial substances and for the reaction products.

Let us analyze this problem in greater detail. Consider the dependence of the quantity Q_p on temperature in an ideal-gas reaction. It is clear that

$$Q_{p,\,T} = I_{\text{prod}} - I_{\text{init}} = \int_0^T c_{p\,\text{prod}}\,dT + I_{0\,\text{prod}} - \int_0^T c_{p\,\text{init}}\,dT - I_{0\,\text{init}}, \tag{15.10}$$

where the subscripts "T" and "0" refer to temperatures T and 0 K, respectively.

Since by definition

$$I_{0\,\text{prod}} - I_{0\,\text{init}} = Q_{p0}, \tag{15.11}$$

where Q_{p0} is the heat of reaction at a temperature $T = 0$ K, Eq. (15.10) can be presented in the following form:

$$Q_{p,\,T} = Q_{p0} + \left[\int_0^T c_{p\,\text{prod}}\,dT - \int_0^T c_{p\,\text{init}}\,dT\right]. \tag{15.12}$$

The second term in the right-hand side of Eq. (15.12) will determine the dependence of Q_p on temperature.

By writing the equation of a chemical reaction in the most general form:

$$\nu_1 A_1 + \nu_2 A_2 + \ldots = \nu_1' A_1' + \nu_2' A_2' + \ldots, \tag{15.13}$$

where ν_1, ν_2, . . . are the stoichiometric numbers of the initial substances, A_1, A_2, . . . the chemical symbols of the initial substances, ν_1', ν_2', . . . the stoichiometric numbers of the products of reaction, and A_1', A_2', . . . the chemical symbols of reaction products, Eq. (15.12) that defines the heat of an isobaric-isothermal reaction can be presented in the following form:

$$Q_p = Q_{p0} + \left[\sum_{i=1}^{n} \int_0^T \nu_i' c_{pi}' \, dT - \sum_{i=1}^{m} \int_0^T \nu_i c_{pi} \, dT \right]. \tag{15.14}$$

Thus it follows that*

$$\frac{dQ_p}{dT} = \sum_{i=1}^{n} \nu_i' c_{pi}' - \sum_{i=1}^{m} \nu_i c_{pi}. \tag{15.15}$$

The last equation, expressing the dependence of Q_p on temperature, is known as the *Kirchhoff's equation.*

Similarly, for the equality $Q_v = U_{\text{prod}} - U_{\text{init}}$ we can obtain

$$\frac{dQ_v}{dT} = \sum_{i=1}^{n} \nu_i' c_{vi}' - \sum_{i=1}^{m} \nu_i c_{vi}. \tag{15.16}$$

Table 15.1 Standard heats of chemical reactions

Reaction	Q_p (kcal/kmol)	Q_p (kJ/kmol)
$H_2(g) = 2H(g)$	−103 252	−432 295
$H_2(g) + \frac{1}{2} O_2(g) = H_2O(l)$	−68 315	−286 021
$\frac{1}{2} Cl_2(g) + \frac{1}{2} H_2(g) + 2O_2(g) = HClO_4(l)$	−8 300	−34 750
$\frac{1}{2} H_2(g) + \frac{1}{2} Br_2(l) = HBr(g)$	−8 670	−36 300
S (s. rhombic) $+ O_2(g) = SO_2(g)$	−70 960	−297 095
$Si(s) + O_2(g) = SiO_2$ (s. α-quartz)	−217 720	−911 550
$Li(s) + H_2O(l) = LiOH(s) + \frac{1}{2} H_2(g)$	−47 620	−199 375
$NH_3(g) = N(g) + 3H(g)$	276 790	1 158 864
$N_2H_4(g) = 2NH_2(g)$	60 400	252 883
$2Al(s) + \frac{3}{2} O_2(g) = Al_2O_3$ (s. corundum)	−400 400	−1 676 395

Note. The letters "g", "l" "s" indicate the state of aggregation of the reactants.

Since tables usually contain the values of standard heats of reaction for $t = 25$ °C ($T = 298.15$ K), it is more convenient to present Eq. (15.14)

* Inasmuch as the caloric quantities of an ideal gas depend only on temperature, we take here not the partial but the total derivative; in this case there is no difference between them.

in the form

$$Q_p = Q_{p,\,T=298.15} + \left[\sum_{i=1}^{n} \int_{T=298.15}^{T} \nu_i' c_{pi}'\, dT - \sum_{i=1}^{m} \int_{T=298.15}^{T} \nu_i c_{pi}\, dT\right]. \quad (15.17)$$

A similar equation can be written for the heat of an isochoric-isothermal reaction:

$$Q_v = Q_{v,\,T=298.15} + \left[\sum_{i=1}^{n} \int_{T=298.15}^{T} \nu_i' c_{vi}'\, dT - \sum_{i=1}^{m} \int_{T=298.15}^{T} \nu_i c_{vi}\, dT\right]. \quad (15.18)$$

Table 15.1 contains the values of standard heats of reaction for a number of substances at p = 760 mm Hg = 101.325 kPa and t = 25 °C.

15.2 Chemical equilibrium and the second law of thermodynamics

The first law of thermodynamics makes it possible to compose balance equations and to derive important relationships for heats of reaction. Using the second law of thermodynamics, we may now determine what chemical reactions are possible and what are not. As was mentioned in Chapter 3, natural processes occur spontaneously in one direction, for example, heat flows from a body at a higher temperature to a body at a lower temperature, gases tend to increase their volume and to diffuse, etc. The general characteristic of spontaneous, irreversible processes in isolated systems is the increase in entropy. Our task is to examine the criteria governing a number of individual chemical processes.

It has been shown experimentally that the possibility and rate of chemical processes depend on the number, chemical properties and parameters (especially temperature) of the reactants. The dependence of the rate of a reaction on the number of reactants leads to the conclusion, fully supported by experimental data, that any reaction can proceed both forward and reverse. In other words, all chemical reactions are chemically reversible*. Furthermore, chemical transformations always proceed in both directions, but not always at equal rates. If the reaction

$$\nu_1 A_1 + \nu_2 A_2 + \ldots \rightleftarrows \nu_1' A_1' + \nu_2' A_2' + \ldots \quad (15.19)$$

proceeds at a given moment from left to right, this only means that more reaction products A_1', A_2', . . ., form per unit time than initial substances A_1, A_2, ... It is precisely for this reason that in the equation of a reaction the sign of equality is often replaced by the sign $\rightleftarrows$. Later, as the amount of substances A_1', A_2', . . . increases and the amount of substances A_1, A_2, ... decreases, the total rate of reaction diminishes and in the long run a state of dynamic equilibrium sets in; it will appear to an observer that no reaction is taking place at all.

Such a state is called *chemical equilibrium*. It must be emphasized that reactions never completely finish, i.e. none of the reactants completely disap-

* The chemical reversibility of reactions should not be confused with their thermodynamic reversibility, inherent only to an ideal process under conditions of mechanical, thermal and chemical equilibrium.

pears. Hence, chemical equilibrium always includes both reaction products and initial substances in the mixture of reactants. However, in many cases such as the explosion of oxyhydrogen,

$$2H_2 + O_2 \rightleftarrows 2H_2O,$$

chemical equilibrium is heavily shifted to one side: the amount of reaction products is great in relation to the amount of initial substances. Nevertheless, this does not change the essence of the problem.

For a given reaction the quantitative composition of the reactants in chemical equilibrium, or the equilibrium composition, depends to a very great extent on temperature and other parameters. Hence, the general direction in which the reaction proceeds can change with temperature.

As was mentioned above, the most general condition for the equilibrium

Fig. 15.3

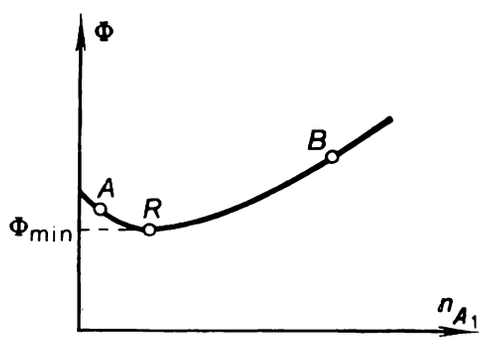

of an isolated, or closed, system is

$$dS = 0, \quad S = S_{max}.$$

Although, valid for an isolated system, this condition is not applicable as an equilibrium criterion to systems which interact with the surroundings under other conditions. That is why we introduced the concept of characteristic functions, whose variation permits us to determine the direction of the processes in different systems. In order to predict the direction of a reaction under given conditions, it is necessary and sufficient to determine the values of a corresponding characteristic function.

The following characteristic functions were introduced: internal energy U, the criterion of equilibrium in processes for S = const and V = const; enthalpy I, the criterion of equilibrium for S = const and p = const; isochoric-isothermal potential (the Helmholtz free energy) $F = U - TS$, the criterion of equilibrium for T = const and V = const; and the isobaric-isothermal potential (the Gibbs free energy) $\Phi = I - TS$, the criterion of equilibrium for T = const and p = const. At corresponding conditions introduced into a system, all these functions reach their maximum value when the system comes into equilibrium and diminish in spontaneous, non-equilibrium processes, tending to a limit.

Thus, if for a system in which an isobaric-isothermal process is possible because of chemical transformations we know the values of Φ depending on composition (for instance, if Φ is a function of the concentration of substance A_1 — n_{A_1}; see Fig. 15.3), then, for a given temperature, all the pos-

sible states of the mixture of reactants, presented on the curve $\Phi = f(n_{A_i})$ will be non-equilibrium states, except for point R which corresponds to Φ_{min}. The chemical reaction will proceed at a certain rate until the equilibrium state R is reached at a minimum value of Φ. It can be seen from Fig. 15.3 that if the mixture of reactants is characterized by point A, the reaction

$$\nu_1 A_1 + \nu_2 A_2 + \ldots \rightleftarrows \nu_1' A_1' + \nu_2' A_2' + \ldots$$

will proceed in the direction indicated by the lower arrow, from right to left (the amount of the substance A_1 in the mixture increases). If the initial state is represented by point B, the reaction will proceed in the direction indicated by the upper arrow, from left to right (the amount of the substance A_1 decreases).

It should be noted that of the four characteristic functions mentioned above, the Helmholtz free energy F and the Gibbs free energy Φ are the most useful, since they are criteria of equilibrium for the most important chemical reactions, proceeding at T = const and V = const or at T = const and p = const. It must be recalled that in the preceding section heats of reaction, Q_v and Q_p, were examined for precisely this kind of process.

The Gibbs free energy $\Phi = I - TS$ is sometimes replaced by the *Planck function*

$$\mathcal{P} = -\frac{\Phi}{T} = S - \frac{I}{T}. \tag{15.20}$$

The numerical values of F, Φ and $\mathcal{P}$ are determined below, in Sec. 15.4.

It was shown in Sec. 5.2 that in a thermodynamically reversible process the decrease of a characteristic function, which is a criterion for equilibrium of the given process, is equal to the total work performed by the system minus the work done on external pressure. As we know, the work done by constantly acting forces can be represented by the difference in the potentials of these forces at the initial and final states of the system, where the potential difference does not depend on the direction of the processes. By an analogy with mechanics, the characteristic functions U, I, F, Φ are also referred to as thermodynamic potentials, or simply potentials.

Thermodynamic potentials are very important in determining *chemical affinity*. Experiments have shown that some chemical substances react easily and rapidly with each other, some substances react with difficulty, and some substances fail to react at all.

What is the measure of chemical affinity? It was originally assumed that chemical affinity was measured by the rate of a reaction between given substances. This assumption had to be discarded simply because the rate of a reaction depends not only on the chemical properties of the reactants and on the parameters under which it proceeds, but also on the presence of catalysts, substances which take little part in a reaction but are capable of greatly affecting the rate of the reaction. Scientists then assumed that chemical affinity depends on the magnitude of the heat of reaction. This assumption was also invalid simply because in different reactions the heats of reaction have different signs. At last it was discovered that the measure of chemical affinity was best determined by the change (decrease) of thermodynamic potential as a result of reaction. Thus, the characteristic functions (thermodynamic potentials) are highly valuable in chemistry. By calculating the thermodynamic potentials, it is possible to measure chemical affinity

for various substances, the probability and limits (equilibrium composition) of a chemical reaction, depending on external conditions especially temperature.

The difference between the thermodynamic potentials of a system at the beginning and the end of a reaction gives, as was already mentioned, the magnitude of the maximum useful work, i.e. the amount of work done in a thermodynamically reversible process minus the work done on the surroundings (on external pressure). The maximum useful work can be determined as follows.

Let us examine an isobaric-isothermal system, whose characteristic function is

$$\Phi = I - TS;$$

according to Eq. (5.35),

$$S = -\left(\frac{\partial \Phi}{\partial T}\right)_p.$$

Consequently, the Gibbs free energy can be presented in the following form:

$$\Phi = I + T\left(\frac{\partial \Phi}{\partial T}\right)_p. \tag{15.21}$$

For the initial and final states of the isobaric-isothermal process ($dp = 0$, $dT = 0$) we can write:

$$\Phi_1 = I_1 + T\left(\frac{\partial \Phi_1}{\partial T}\right)_p, \tag{15.21a}$$

$$\Phi_2 = I_2 + T\left(\frac{\partial \Phi_2}{\partial T}\right)_p. \tag{15.21b}$$

Whence, taking Eq. (5.27) into account we find that

$$L_{p,T} = \Phi_1 - \Phi_2 = I_1 - I_2 + T\left[\frac{\partial(\Phi_1 - \Phi_2)}{\partial T}\right]_p. \tag{15.22}$$

Since

$$I_1 - I_2 = -Q_p,$$

Eq. (15.22) can be presented in the following form:

$$L_{p,T} = -Q_p + T\left(\frac{\partial L_{p,T}}{\partial T}\right)_p. \tag{15.23}$$

Equation (15.23), which generally takes the form

$$L_x = -Q_x + T\left(\frac{\partial L_x}{\partial T}\right)_x, \tag{15.24}$$

is the mathematical expression of the two main laws of thermodynamics and is of great importance for calculations of chemical equilibrium. It is called the *Gibbs-Helmholtz equation.*

In discussing change-of-phase processes (Sec. 5.2), we introduced the concept of chemical potential. The chemical potential is quite important for processes accompanied by chemical transformations.

In illustration, for the isobaric-isothermal system of a variable composition we can write

$$\Phi = f(p, T, M_1, M_2, \ldots). \tag{15.25}$$

where M_1, M_2, . . . represent the number of moles of individual system components; it should be emphasized that individual substances may be added and removed from the system without observing the condition

$$\sum_{i=1}^{n} M_i = \text{const.} \tag{15.26}$$

It is clear that generally

$$d\Phi = \left(\frac{\partial\Phi}{\partial p}\right)_{T, M_1, M_2, \ldots} dp + \left(\frac{\partial\Phi}{\partial p}\right)_{p, M_1, M_2, \ldots} dT + \\ + \sum_{i=1}^{n} \left(\frac{\partial\Phi}{\partial M_i}\right)_{p, T, M_j} dM_i, \tag{15.27}$$

where the subscript "j" denotes the constancy of the number of moles of all substances except M_i. The quantity

$$\left(\frac{\partial\Phi}{\partial M_i}\right)_{p, T, M_j} = \varphi_i \tag{15.28}$$

is called the *chemical potential*, as has been mentioned in Sec. 5.2*.

To elucidate the physical meaning of chemical potential, let us recall that any kind of work (mechanical, volumetric, chemical, etc.), is always expressed by the product of a generalized force and the change in a generalized coordinate. For example, mechanical work $dL_{\text{mech}} = f\,dl$, where f is the force (generalized force), and dl is the elementary displacement; work of expansion, $dL_{\text{exp}} = p\,dV$, where p is the pressure (generalized force), and dV is the volume increment (generalized coordinate). Chemical work must also be expressed by the product of quantities of this kind.

We know that the change of a characteristic function in a corresponding reversible process means a change of potential and is equal to the maximum work minus the work done on the surroundings (external pressure). For the isobaric-isothermal process ($dp = 0$ and $dT = 0$) Eq. (15.27) takes the following form:

$$d\Phi_{p, T} = \sum_{i=1}^{n} \left(\frac{\partial\Phi}{\partial M_i}\right)_{p, T, M_j} dM_i = \sum_{i=1}^{n} \varphi_i\, dM_i. \tag{15.29}$$

With this in mind, the chemical potential φ is the generalized force, and the change of the number of moles of a given substance is the generalized coordinate.

On a similar bases and taking into account Eq. (5.61), which, as applied to the amount of substance in terms of the number of moles, takes the form

$$\varphi_i = \left(\frac{\partial\Phi}{\partial M_i}\right)_{p, T, M_j} = \left(\frac{\partial F}{\partial M_i}\right)_{V, T, M_j} = \left(\frac{\partial I}{\partial M_i}\right)_{p, S, M_j} = \left(\frac{\partial U}{\partial M_i}\right)_{V, S, M_j},$$

* In Sec. 5.2 the chemical potential φ was defined as $\varphi = (\partial\Phi/\partial G)_{p,T}$, where G is the mass of substance in the system. It is clear that the definition expressed by Eq. (15.28) is identical with the above definition, since the amount of substance in a system can be expressed both in terms of the mass and the number of moles of this substance.

we can write:

$$dU_{V,S}=\sum_{i=1}^{n}\left(\frac{\partial U}{\partial M_i}\right)_{V,S,M_j}dM_i=\sum_{i=1}^{n}\varphi_i\,dM_i; \tag{15.30}$$

$$dI_{p,S}=\sum_{i=1}^{n}\left(\frac{\partial I}{\partial M_i}\right)_{p,S,M_j}dM_i=\sum_{i=1}^{n}\varphi_i\,dM_i; \tag{15.31}$$

$$dF_{T,V}=\sum_{i=1}^{n}\left(\frac{\partial F}{\partial M_i}\right)_{T,V,M_j}dM_i=\sum_{i=1}^{n}\varphi_i\,dM_i. \tag{15.32}$$

It will be recalled that, in accordance with Eq. (5.43),

$$\varphi = i - Ts.$$

15.3 Equilibrium constant and degree of dissociation

Let us examine a homogeneous reaction of gaseous substances possessing the properties of ideal gases. If the stoichiometric numbers of the reactants are all equal to one, the reaction equation has the form

$$A_1+A_2+\ldots \underset{w_1}{\overset{w}{\rightleftarrows}} A_1'+A_2'+\ldots\,. \tag{15.33}$$

From the molecular-kinetic point of view the rate of reaction is equal to the number of molecular collisions, which is greater, the higher the concentration of substances. Therefore, the rate at which the reaction proceeds from left to right is

$$w = K\,[A_1]\,[A_2]\ldots, \tag{15.34}$$

and the rate of the reaction from right to left is

$$w_1=K_1\,[A_1']\,[A_2'']\ldots, \tag{15.35}$$

where $[A_1]$, $[A_2]$, . . ., $[A_1']$, $[A_2']$, . . . are the concentrations of the reactants, and K and K_1 are the rate-of-reaction constants, which depend on the chemical nature of the substances, the temperature, the presence of catalysts, and other factors.

Equations (15.34) and (15.35) represent the mathematical expression of the *law of mass action*, which can be formulated as follows:

The rate of a chemical reaction is proportional to the active masses of the reacting substances.

For a homogeneous reaction this is true for concentrations.

It is clear that for a system in a state of chemical equilibrium $w = w_1$ and, consequently,

$$K\,[A_1]\,[A_2]\ldots=K_1\,[A_1']\,[A_2']\ldots, \tag{15.36}$$

or

$$\frac{K_1}{K}=\frac{[A_1]\,[A_2]}{[A_1']\,[A_2']}=K_{\text{const}}. \tag{15.37}$$

The quantity K_{const} is called the *equilibrium constant* and depends on temperature for the given ideal-gas reaction. The equilibrium constant, determined

either experimentally or analytically, is very important for chemical processes.

For a more general reaction, expressed by Eq. (15.13),

$$\nu_1 A_1 + \nu_2 A_2 + \ldots \underset{w_1}{\overset{w}{\rightleftarrows}} \nu_1' A_1' + \nu_2' A_2' + \ldots,$$

the rates of the reactions can be determined from the equations

$$w = K [A_1]^{\nu_1} [A_2[^{\nu_2} \ldots \tag{15.38}$$

and

$$w_1 = K_1 [A_1']^{\nu_1'} [A_2']^{\nu_2'}, \tag{15.39}$$

since not only the collisions of the molecules of various substances but also the collisions of molecules of the same substance are important from the molecular-kinetic point of view. Then the equilibrium constant is expressed as

$$K_{\text{cons}} = \frac{[A_1]^{\nu_1} [A_2]^{\nu_2}}{[A_1']^{\nu_1'} [A_2']^{\nu_2'}}. \tag{15.40}$$

Equation (15.40) is universal. For a given reaction, proceeding under the same external conditions, K_{const} is constant.

If a certain quantity of one or of several reactants is added to the volume in which the chemical reaction proceeds or if the temperature is changed, equilibrium may be disturbed. The new chemical process tries to restore the disturbed equilibrium and is governed by the *Le Chatelier-Braun principle.*

If a change occurs in one of the factors under which a system is in equilibrium, the system will tend to adjust itself so as to annul, as far as possible, the effect of that change.

If, for example, the temperature of the reactants is increased, then, in accordance with the Le Chatelier-Braun principle, the resulting chemical process will occur with absorption of heat. If a certain amount of one of the reactants is added into the mixture, the resulting reaction will be shifted in the direction of a decrease in the amount of this reactant.

Let us consider an ideal-gas reaction proceeding without a change in the number of moles such as the reaction forming hydrogen iodide (hydriodic acid), described by the equation

$$H_2 + I_2 \rightleftarrows 2HI.$$

By denoting the number of moles of each component M_i, we can write for each Clapeyron's equation

$$p_i = \frac{M_i}{V} \mu RT = [A_i] \mu RT, \tag{15.41}$$

where $[A_i]$ is the number of moles of a given substance per unit volume, i.e. the molar concentration of the given substance. Then,

$$K_{\text{cons}} = \frac{[H_2][I_2]}{[HI]^2} = \frac{p_{H_2} p_{I_2}}{p_{HI}^2} \frac{(\mu RT)^2}{(\mu RT)^2} = \frac{p_{H_2} p_{I_2}}{p_{HI}^2} = K_p, \tag{15.42}$$

where p_{H_2} p_{I_2}, and p_{HI} are the partial pressures and K_p is the equilibrium constant expressed in terms of the partial pressures of the reactants. Thus,

for an ideal-gas reaction proceeding without a change in the number of moles, $K_p = K_{\text{const}}$.

Let us now consider a more general reaction

$$\nu_1 A_1 + \nu_2 A_2 + \ldots \rightleftarrows \nu_1' A_1' + \nu_2' A_2' + \ldots,$$

with $\nu_1' + \nu_2' + \ldots - \nu_1 - \nu_2 - \ldots = \Delta\nu$ representing the change in the number of moles when the reaction proceeds from left to right. Since the molar concentration of a reactant can again be presented in the form

$$[A_i] = \frac{p_i}{\mu RT}, \tag{15.41a}$$

we find that

$$K_{\text{const}} = \frac{[A_1]^{\nu_1}[A_2]^{\nu_2}\ldots}{[A_1']^{\nu_1'}[A_2']^{\nu_2'}\ldots} = \frac{p_{A_1}^{\nu_1} p_{A_2}^{\nu_2}\ldots}{p_{A_1'}^{\nu_1'} p_{A_2'}^{\nu_2'}\ldots}(\mu RT)^{\Delta\nu}, \tag{15.42a}$$

or

$$K_{\text{const}} = K_p\,(\mu RT)^{\Delta\nu}. \tag{15.43}$$

Gas reactions are often calculated with the aid of the equilibrium constant K_p, since the composition of the mixture is usually given in molar fractions of reactants, which are proportional to the partial pressures. It should be borne in mind that different values of equilibrium constants for the same reactions, proceeding under the same external conditions, can be encountered in the literature. The fact is that sometimes the numerator of the expression for the equilibrium constant contains the product of the concentrations (or partial pressures) of the initial products to corresponding powers, and the denominator, the same products of concentrations (or partial pressures) of reaction products, as is presented in this book. But in some cases reverse ratios are used.

Chemistry frequently uses the concept of *dissociation* defined as the process of partial or full decomposition of a substance into its components.

For instance, the reaction

$$2NO_2 \rightleftarrows N_2O_4,$$

proceeding from right to left, represents the dissociation of N_2O_4.

The *degree of dissociation* α is the ratio of the number of moles of the initial substance, which decomposes into the products of dissociation, to the entire initial amount of the substance expressed in moles, M_0.

Hence, for the reaction of dissociation of N_2O_4, in a state of equilibrium, the total number of moles M in the mixture will be

$$M = (1 - \alpha)\,M_0 + 2\alpha M_0 = (1 + \alpha)\,M_0, \tag{15.44}$$

where $(1 - \alpha)\,M_0$ is the number of moles of N_2O_4, and $2\alpha M_0$ is the number of moles of NO_2.

Equation (15.44) holds for all reactions where one mole of the initial substance dissociates into two moles of the dissociation products.

In order to relate the equilibrium constants with the degree of dissociation, let us express the concentration of reactants in terms of the degree of dissociation, again using the dissociation of nitrogen tetroxide as an example. It is clear that

$$[N_2O_4] = \frac{(1-\alpha)\,M_0}{V}$$

and

$$[NO_2] = \frac{2\alpha M_0}{V},$$

where V is the total volume of the mixture.

It follows that

$$K_{const} = \frac{[NO_2]^2}{[N_2O_4]} = \frac{4\alpha^2 M_0^2 V}{V^2(1-\alpha)M_0} = \frac{4\alpha^2}{1-\alpha}\frac{M_0}{V}. \quad (15.45)$$

Clapeyron's equation,

$$pV = M_0(1+\alpha)\mu RT \quad (15.46)$$

yields:

$$\frac{M_0}{V} = \frac{p}{(1+\alpha)\mu RT}. \quad (15.47)$$

Substituting this value of M_0/V into Eq. (15.45), we get:

$$K_{const} = \frac{4\alpha^2}{1-\alpha}\frac{M_0}{V} = \frac{4\alpha^2 p}{(1-\alpha^2)}\frac{1}{\mu RT}. \quad (15.48)$$

Since, in accordance with Eq. (15.43),

$$K_{const} = K_p = (\mu RT)^{\Delta\nu}$$

and since here $\Delta\nu$ is equal to -1, we get:

$$K_p = \frac{4\alpha^2 p}{1-\alpha^2}. \quad (15.49)$$

It ought to be emphasized that in ideal-gas reactions of this type (i.e. in reactions yielding two moles of dissociation products for one mole of the initial product), an increase in pressure at a constant temperature and, consequently, with constant K_{const} and K_p, causes a decrease in the degree of dissociation α, as can be seen from Eq. (15.49). The same conclusion can be reached from the Le Chatelier-Braun principle. Indeed, according to this principle, an increase in the system's pressure must cause a new drop in mixture pressure. But this can occur only if the degree of dissociation decreases, since the number of mixture moles decreases causing a drop in the system's pressure at a constant temperature.

The dependence of K_p on α is determined by the nature of the reaction. The above method of analysis permits easy derivation of equations relating K_p and α for various types of reactions, some of which are given below.

(1) Reaction of the type

$$X + X \rightleftarrows X_2, \quad (15.50)$$

already considered, such as $2NO_2 \rightleftarrows N_2O_4$ or $2N \rightleftarrows N_2$:

$$K_p = \frac{4\alpha^2 p}{1-\alpha^2}.$$

(2) Reaction of the type

$$X + Y \rightleftarrows XY, \quad (15.51)$$

such as $NH_3 + HCl \rightleftarrows NH_4Cl$ or $N + O \rightleftarrows NO$:

$$K_p = \frac{\alpha^2 p}{1-\alpha^2}. \quad (15.52)$$

(3) Reaction of the type

$$2XY + X_2 \rightleftarrows 2X_2Y, \tag{15.53}$$

such as $2CO + O_2 \rightleftarrows 2CO_2$ or $2OH + H_2 \rightleftarrows 2H_2O$ or $2H_2 + O_2 \rightleftarrows 2H_2O$:

$$K_p = \frac{\alpha^3 p}{(1-\alpha)^2 (2+\alpha)}. \tag{15.54}$$

(4) Reaction of the type

$$X_2 + Y_2 \rightleftarrows 2XY, \tag{15.55}$$

such as $Cl_2 + H_2 \rightleftarrows 2HCl$ or $H_2 + I_2 \rightleftarrows 2HI$:

$$K_p = K_{\text{const}} = \frac{\alpha^2}{4(1-\alpha^2)}. \tag{15.56}$$

(5) Reaction of the type

$$A + X_2 \rightleftarrows AX_2, \tag{15.57}$$

where A is a chemical substance in the solid state; in this case a heterogeneous reaction takes place where the concentration of the solid reactant is considered to be constant and therefore is not introduced into the equation for the equilibrium constant. An example of such a reaction is $C + O_2 \rightleftarrows CO_2$:

$$K_p = K_{\text{const}} = \frac{\alpha}{1-\alpha}. \tag{15.58}$$

(6) Reaction of the type

$$A + AX_2 \rightleftarrows 2AX, \tag{15.59}$$

for instance, $C + CO_2 \rightleftarrows 2CO$:

$$K_p = \frac{\alpha(2-\alpha)}{4p(1-\alpha^2)}. \tag{15.60}$$

Dissociation of diatomic gases

The thermodynamic properties of dissociating diatomic gases (especially hydrogen, oxygen, nitrogen, etc.) are important for many engineering problems. At low pressures the mixture components (monoatomic and diatomic) can be considered as ideal gases. The equilibrium constant K_p of the dissociation reaction considered above is determined by Eq. (15.49). This equation can also be presented in the form

$$\alpha = \sqrt{\frac{K_p}{K_p + 4p}}. \tag{15.61}$$

Below, we shall derive relations which permit us to calculate the equilibrium constant K_p [see Eq. (15.107)]. Having calculated the value of K_p for various values of p and T, we can use Eq. (15.61) to determine the direct dependence of α on pressure and temperature, thereby determining the mixture composition.

Knowing the composition of the mixture, we can determine its major thermodynamic properties. The molar enthalpy of the dissociating ideal gas is determined from relationship

$$I_{\text{mix}} = N_1 I_1 + N_2 I_2, \tag{15.62}$$

where I_1 and I_2 are the molar enthalpies of mixture components of monoatomic and diatomic gases, respectively, in the ideal-gas state, and N_1 and N_2 are the molar fractions of the mixture components.

It will be recalled that the molar fraction N_i of a mixture component is determined from Eq. (1.39)

$$N_i = \frac{M_i}{M},$$

where M_i and M are the number of moles of the ith mixture component and of the entire mixture, respectively. Since, as was shown above, for a similar reaction, described by Eq. (15.44), $M_1 = (1 - \alpha) M_0$, $M_2 = 2\alpha M_0$ and $M = (1 + \alpha) M_0$, where M_0 is the initial quantity of substance (before dissociation sets in) expressed in moles, it is clear that

$$N_1 = \frac{1-\alpha}{1+\alpha} \quad \text{and} \quad N_2 = \frac{2\alpha}{1+\alpha}. \tag{15.63}$$

In accordance with Eq. (1.55), the apparent molecular mass of this mixture of a monoatomic and a diatomic gas is

$$\mu_{\text{mix}} = N_1\mu_1 + N_2\mu_2. \tag{15.64}$$

Allowing for Eq. (15.63) and bearing in mind that

$$\mu_2 = 2\mu_1 \tag{15.65}$$

(a molecule dissociates into two atoms), we find that Eq. (15.64) yields for this mixture:

$$\mu_{\text{mix}} = \frac{2\mu_1}{1+\alpha} \tag{15.66}$$

The heat of an isobaric-isothermal reaction of dissociation (the heat of dissociation, Q_p^{dis}) is, obviously, determined from the expression

$$Q_p^{\text{dis}} = 2I_1 - I_2. \tag{15.67}$$

Taking into account Eqs. (15.63), (15.66) and (15.67), we derive from Eq. (15.62) the following relation for the specific enthalpy ($i_{\text{mix}} = I_{\text{mix}}/\mu_{\text{mix}}$) of this dissociating gas:

$$i_{\text{mix}} = \frac{I_1 - \frac{1-\alpha}{2} Q_p^{\text{dis}}}{\mu_1} = i_1 - \frac{1-\alpha}{2\mu_1} Q_p^{\text{dis}}. \tag{15.68}$$

Differentiating i_{mix} with respect to temperature for T = const and taking into account that according to Kirchhoff's equation*

$$\frac{dQ_p^{\text{dis}}}{dT} = 2\mu c_{p1} - \mu c_{p2}, \tag{15.69}$$

we derive from Eq. (15.68) the expression for the heat capacity c_p of the dissociating gas:

$$c_p^{\text{mix}} = \alpha c_{p1} + (1-\alpha) c_{p2} + \frac{Q_p^{\text{dis}}}{2\mu_1} \left(\frac{\partial \alpha}{\partial T}\right)_p. \tag{15.70}$$

* Unlike the Kirchhoff's equation (15.15), Eq. (15.69) contains molar heat capacities, since, as can be seen from Eq. (15.67), here Q_p^{dis} is the molar heat of dissociation.

As can be seen from this relationship, the heat capacity c_p of this chemically reacting mixture differs from the heat capacity c_p of a mixture of nonreacting ideal gases by the value of the last term in the right-hand side of Eq. (15.70), called the *chemical contribution to heat capacity*. If the chemical contribution is ignored, errors may be committed in calculating the heat capacity of such a mixture.

Inasmuch as isobars have a point of inflection on the graph $\alpha = f(p, T)$, which can be seen in Fig. 15.4, it is clear that at this point of inflection the value $(\partial\alpha/\partial T)_p$ of Eq. (15.70) passes through a maximum. It is clear that the process of dissociation proceeds at the highest rate in the temperature range where this value is maximum. Correspondingly, in this temperature range, isobars have a point of inflection on the i-T diagram plotted for the dissociating gas and, according to Eq. (15.70), the isobars of heat capacity c_p have maxima.

As was already mentioned, at low pressures the dissociating gas can be considered to be a mixture of chemically reacting ideal gases. It should be emphasized that although each of the mixture components is an ideal gas (whose enthalpy and heat capacity, for instance, do not depend on pressure), the entire system behaves as a real gas (for instance, the enthalpy and heat capacity c_p of the mixture depend on pressure). It is clear that the "degree of nonideality" of this mixture is greater, the greater the thermal effect of the dissociation reaction is. The fact that a mixture of reacting ideal gases possesses properties of a real gas is not surprising since there is a certain similarity between such a system and a real gas: there is a certain similarity between the dissociation of molecules and the disintegration of intermolecular complexes (associations).

Thermal ionization. Saha's equation

Engineers and scientists dealing with high-temperature installations and equipment, often work with substances in the so-called *plasma state*.

At high temperatures a process of *thermal ionization* consisting of the detachment of electrons from the external electron shell of an atom, takes place in a monoatomic gas. This process causes the formation of a mixture of negatively charged electrons, positively charged ions and electrically neutral atoms. This mixture of electrically charged and neutral particles is an electric conductor, as was mentioned in Chapter 12. The composition of this mixture is determined by mixture pressure and temperature.

It should be noted that thermal ionization can be considered as a chemical reaction. Thus, the equation of the reaction of single ionization* (the detachment of one electron from an atom) can be written in the following form:

$$A \rightleftarrows A^+ + e, \tag{15.71}$$

where the symbol A denotes the neutral atom, e the free electron and A^+ stands for the positively charged ions. Like any other chemical reaction, this reaction proceeds in both directions. The opposite process of formation of an

* The detachment of a second electron (secondary ionization) actually begins only at the temperatures at which the process of single ionization terminates (i.e. when all atoms are ionized). This temperature is usually very high; for argon, for instance, single ionization stops at about 20 000 K. The detachment of the next electrons occurs at even higher temperatures.

electrically neutral atom when an ion and an electron are combined is called recombination.

The ionization reaction is characterized by the degree of ionization, analogous to the degree of dissociation. The degree of single ionization α is the ratio of the number of moles of the initially neutral gas which decompose into products of ionization (ions and electrons) to the entire initial number of moles of the neutral gas M_0.

The dependence of the degree of single ionization of a monoatomic gas on the equilibrium constant K_p (at low pressures, i.e. when plasma can be considered as an ideal gas) can be derived with the aid of the law of mass action.

It is clear that for the reaction of single ionization (15.71), the total number of moles of the mixture in the state of equilibrium will be

$$M = (1 - \alpha) M_0 + \alpha M_0 + \alpha M_0 = (1 + \alpha) M_0 \qquad (15.72)$$

where $(1 - \alpha) M_0$ is the number of moles of the neutral gas, and αM_0 is the number of moles of the ions, equal to the number of moles of the free electrons.

The molar concentrations of the reactants of the single ionization (15.71) are determined by the following obvious relations:

$$[A] = \frac{(1-\alpha) M_0}{V} \text{ and } [A^+] = [e] = \frac{\alpha M_0}{V}, \qquad (15.73)$$

where V is the total volume of plasma.

From Clapeyron's equation written for a mixture in the state of equilibrium,

$$pV = (1 + \alpha) M_0 \mu RT, \qquad (15.74)$$

we obtain:

$$\frac{M_0}{V} = \frac{p}{1+\alpha} \frac{1}{\mu RT}. \qquad (15.75)$$

In accordance with Eqs. (15.70) and (15.73), the equation for the equilibrium constant K_{const} of the reaction of ionization takes the following form:

$$K_{\text{const}} = \frac{[A]}{[A^+][e]} = \frac{1-\alpha}{\alpha^2} \frac{V}{M_0}. \qquad (15.76)$$

Thus, taking into account (15.75), we get:

$$K_{\text{const}} = \frac{1-\alpha^2}{\alpha^2 p} \mu RT. \qquad (15.77)$$

When the reaction described by Eq. (15.71) proceeds from left to right, $\Delta\nu = \nu_1' + \nu_2' + \ldots - \nu_1 - \nu_2 \ldots$. For the reaction considered $\nu_1 = 1$, $\nu_1' = 1$ and $\nu_2' = 1$. Therefore $\Delta\nu = 1$. It follows then from Eq. (15.43) that

$$K_p = \frac{K_{\text{const}}}{\mu RT}. \qquad (15.78)$$

It is clear from Eqs. (15.77) and (15.78) that for the reaction of ionization

$$K_p = \frac{1-\alpha^2}{\alpha^2 p} \qquad (15.79)$$

and, consequently,

$$\alpha = \frac{1}{\sqrt{1 + pK_p}}. \qquad (15.80)$$

Equation (15.80) shows the dependence of the degree of ionization on the equilibrium constant K_p of this reaction.

Having calculated the magnitude of K_p (as we mentioned, the equations for K_p will be given below), Eq. (15.80) can be transformed to take the form $\alpha = f(p, T)$. Calculations show that Eq. (15.80) then takes the following form:

$$\frac{\alpha^2}{1-\alpha^2} p = CT^{\frac{5}{2}} e^{-\frac{U_i}{kT}}, \tag{15.81}$$

where U_i is the ionization energy for the given gas (i.e. the heat of an ionization reaction), k is Boltzmann's constant and C is a constant. Equation (15.81),

Fig. 15.4

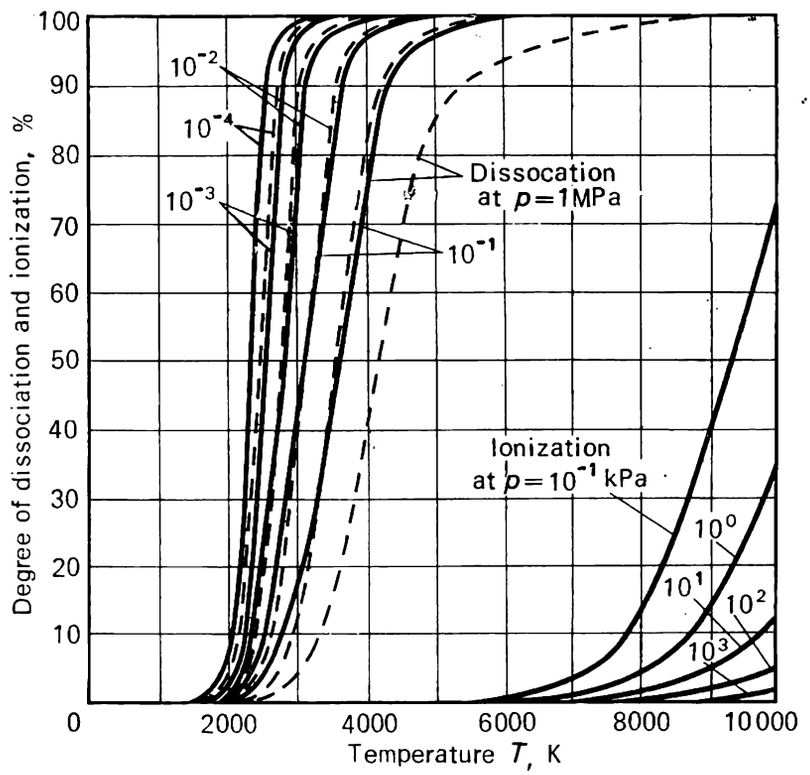

expressing the dependence of the degree of single ionization α on temperature and pressure, is called *Saha's equation*, named after the Indian astrophysicist M. N. Saha, who derived this equation in 1920.

The constant C cannot be determined thermodynamically; calculated by the methods of statistical physics, it is equal to

$$C = \frac{Z_i Z_e}{Z_a} \left(\frac{2\pi m_e}{h^2}\right)^{3/2} k^{5/2}, \tag{15.82}$$

where m_e is the electron mass, h is Planck's constant ($h = 6.62 \times 10^{-27}$ erg-s), and Z_i, Z_e and Z_a are the partition functions for ions, electrons and neutral atoms, respectively ($Z_e = 2$, the calculation of Z_i and Z_a is more complicated). It should be emphasized that C is constant only when the temperature dependence of the heat capacity of the components of the reacting mixture is ignored. For more accurate calculations, taking this temperature dependence of heat capacity into account, constant C also depends on temperature [then in Eq. (15.82) the quantities Z_i and Z_a depend on temperature].

The degree of ionization α is plotted as a function of temperature and pressure on the graph shown in Fig. 15.4, where (in the right side of the graph)

the values of α for water vapour (solid lines) and hydrogen (dotted lines) are shown on different isobars. As can be seen from this graph (on which the curves of the dependence of the degree of association on p and T are also plotted), on corresponding isobars ionization actually begins only at the temperatures at which the dissociation of the gas terminates (i.e. the gas becomes completely dissociated).

Like a reaction of dissociation, when ionization occurs in the temperature region where the rate of dissociation is the greatest [i.e. in the region where the isobar $\alpha = f(p, T)$ has a point of inflection where the quantity $(\partial\alpha/\partial T)_p$ passes through a maximum], the heat capacity of plasma passed through a maximum.

Thus, an increase in gas temperature causes its heat capacity to first pass through the maximum due to dissociation, then through the maximum due to single ionization*. The maximum dissociation and ionization heat capacities can be seen on the graph of the temperature dependence of heat capacities c_p and c_v of air (at a standard density), shown in Fig. 15.5.

The thermodynamic properties of plasma (for single thermal ionization at low pressures) were calculated by the equation of state (15.74), in which the quantity α was determined from Saha's equation. It is much more difficult to determine the properties of high-pressure, or dense, plasma.

Earlier we found that chemical equilibrium is characterized by two factors: the minimum of a corresponding characteristic function and the equilibrium constant. Although we have investigated these two equilibrium criteria independently, we may assume that they are related in some way.

To determine how the two most important equilibrium factors are related, we shall use the method suggested by the Dutch chemist J. H. Van't Hoff to examine the following thermodynamically reversible ideal-gas reaction

$$2H_2 + O_2 \rightleftarrows 2H_2O.$$

Let us visualize the layout shown in Fig. 15.6. Vessels A, B and D contain pure substances H_2, O_2 and H_2O at pressures P_{H_2}, P_{O_2} and P_{H_2O}, respectively, the concentrations being c_{H_2}, c_{O_2} and c_{H_2O}. These pressures and concentrations are usually non-equilibrium with respect to this reaction.

In addition, there is a vessel with semipermeable partitions called the *Van't Hoff reaction box*. The semipermeable partition a is only permeable to hydrogen, partition b only to oxygen, and partition d only to water vapour. In the Van't Hoff reaction box hydrogen, oxygen and water vapour are in equilibrium at corresponding equilibrium pressures p_{H_2}, p_{O_2} and p_{H_2O} and concentrations $[H_2]$, $[O_2]$ and $[H_2O]$.

If the equilibrium in the Van't Hoff reaction box is maintained and if small amounts of H_2 and O_2 are introduced at parameters equal to those of the mixture components and the component H_2O is removed from the vessel, a thermodynamically reversible reaction can be visualized. In addition, the layout must be fitted with three cylinders with pistons to affect reversible compression (or expansion) of the reaction components.

Let us imagine the following thermodynamically reversible integral process at a constant temperature and volume. Two moles of H_2 and one mole of O_2 are irreversibly (in small portions) introduced (injected) into the

* Higher-order ionization also causes a maximum for the heat capacities.

Van't Hoff reaction box, and two moles of H_2O are removed. The volumes of the vessels A, B and D are sufficiently large, so that the non-equilibrium pressures and concentrations of the gases in the vessels can be assumed con-

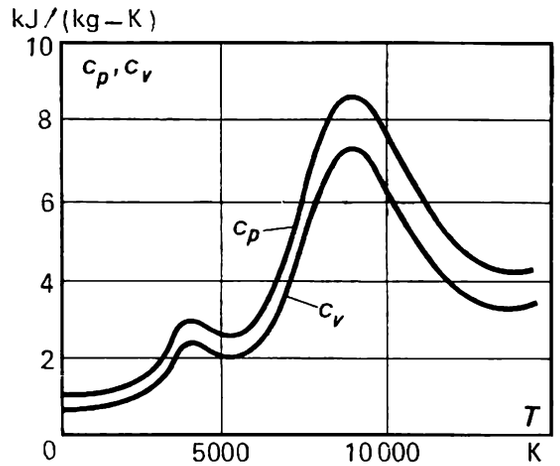

Fig. 15.5

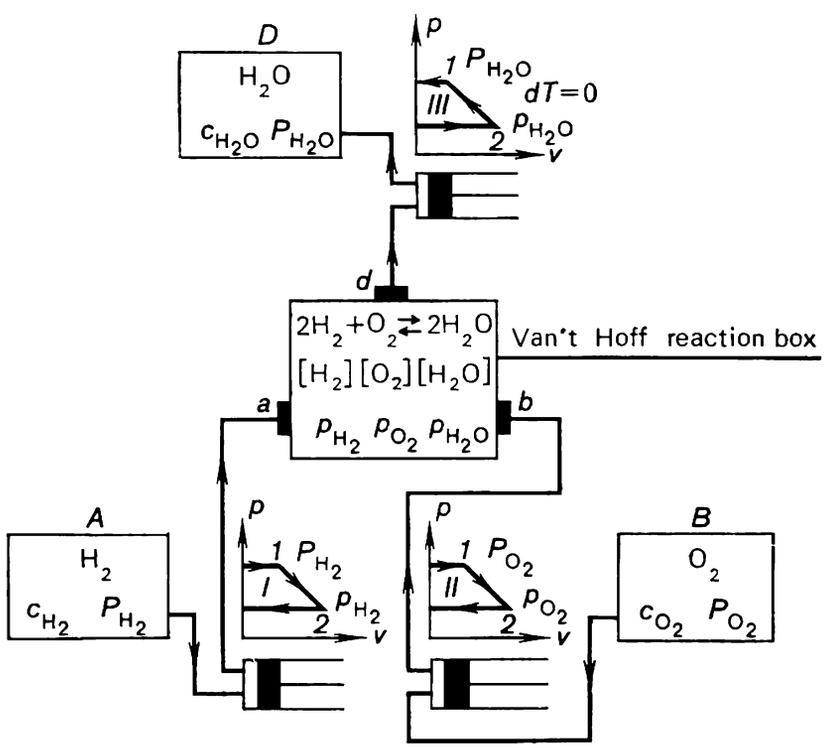

Fig. 15.6

stant*. It is clear that in the course of this procedure it is necessary to carry out reversible isothermal expansions of the two moles of H_2 and of one mole of O_2 from the initial pressures P_{H_2} and P_{O_2} to the final pressures p_{H_2} and p_{O_2} and compression of the two moles of H_2O from p_{H_2O} to P_{H_2O}. The resulting work L is the algebraic sum of three kinds of work corresponding to the three processes enumerated, and it represents the maximum work (all processes are thermodynamically reversible), which does not include the work

* This is not obligatory, and the assumption is made to simplify the subsequent analysis.

done on the surroundings (the total volume of the system does not change, and the pistons return to their initial position), denoted by $L_{V,T}$ and equal to the decrease in the Helmholtz free energy of the system.

Hence,

$$L_{V,T} = \sum L = L_{\mathrm{I}} + L_{\mathrm{II}} + L_{\mathrm{III}}, \tag{15.83}$$

where (as shown in Fig. 15.6)

$$L_{\mathrm{I}} = -\int_1^2 V\,dp = \int_2^1 V\,dp = 2\mu RT \ln \frac{p_{\mathrm{H_2}}}{p_{\mathrm{H_2}}}. \tag{15.84}$$

Inasmuch as the pressures are proportional to concentrations, we have:

$$L_{\mathrm{I}} = 2\mu RT \ln \frac{c_{\mathrm{H_2}}}{[\mathrm{H_2}]} = \mu RT \ln \frac{c^2_{\mathrm{H_2}}}{[\mathrm{H_2}]^2}. \tag{15.85}$$

Similarly (see Fig. 15.6), it is easy to find that

$$L_{\mathrm{II}} = \mu RT \ln \frac{p_{\mathrm{O_2}}}{p_{\mathrm{O_2}}} = \mu RT \ln \frac{c_{\mathrm{O_2}}}{[\mathrm{O_2}]} \tag{15.86}$$

and

$$L_{\mathrm{III}} = -2\mu RT \ln \frac{p_{\mathrm{H_2O}}}{p_{\mathrm{H_2O}}} = -\mu RT \ln \frac{c^2_{\mathrm{H_2}}}{[\mathrm{H_2O}]^2}. \tag{15.87}$$

Thus,

$$L_{V,T} = L_{\mathrm{I}} + L_{\mathrm{II}} + L_{\mathrm{III}} = \mu RT \left(\ln \frac{c^2_{\mathrm{H_2}}}{[\mathrm{H_2}]^2} + \ln \frac{c_{\mathrm{O_2}}}{[\mathrm{O_2}]} - \ln \frac{c^2_{\mathrm{H_2O}}}{[\mathrm{H_2O}]^2} \right) =$$

$$= \mu RT \ln \frac{c^2_{\mathrm{H_2}} c_{\mathrm{O_2}} [\mathrm{H_2O}]^2}{c^2_{\mathrm{H_2O}} [\mathrm{H_2}]^2 [\mathrm{O_2}]} = \mu RT \left(\ln \frac{c^2_{\mathrm{H_2}} c_{\mathrm{O_2}}}{c^2_{\mathrm{H_2O}}} - \ln \frac{[\mathrm{H_2}]^2 [\mathrm{O_2}]}{[\mathrm{H_2O}]^2} \right). \tag{15.88}$$

Then, since in accordance with Eq. (15.40)

$$K_{\mathrm{const}} = \frac{[\mathrm{H_2}]^2 [\mathrm{O_2}]}{[\mathrm{H_2O}]^2},$$

we find that Eq. (15.88) takes the following form:

$$L_{V,T} = \mu RT \left(\ln \frac{c^2_{\mathrm{H_2}} c_{\mathrm{O_2}}}{c^2_{\mathrm{H_2O}}} - \ln K_{\mathrm{const}} \right). \tag{15.89}$$

On this basis we may conclude that, irrespective of molecular-kinetic ideas of the rate of reaction, the quantity

$$K_{\mathrm{const}} = \frac{[\mathrm{H_2}]^2 [\mathrm{O_2}]}{[\mathrm{H_2O}]^2}$$

is constant for a given reaction under given conditions, since the work done in a reversible process under given conditions is always constant.

For a general chemical reaction

$$\nu_1 A_1 + \nu_2 A_2 + \ldots \rightleftarrows \nu_1' A_1' + \nu_2' A_2' + \ldots$$

Eq. (15.89) can be presented in the following form

$$L_{V,T} = \mu RT \left[\ln \frac{c_{A_1}^{\nu_1} c_{A_2}^{\nu_2} \ldots}{c_{A_1'}^{\nu_1'} c_{A_2'}^{\nu_2'} \ldots} - \ln K_{\mathrm{const}} \right], \tag{15.90}$$

or, which is the same,

$$L_{V,T} = \mu RT \left[\sum_{i=1}^{m} (\nu_i \ln c_i) - \ln K_{\text{const}}\right], \tag{15.91}$$

where

$$\sum_{i=1}^{m} (\nu_i \ln c_i) = \nu_1 \ln c_{A_1} + \nu_2 \ln c_{A_2} + \ldots - \nu_1' \ln c_{A_1'} - \nu_2' \ln c_{A_2'} - \ldots . \tag{15.92}$$

Equation (15.91) can be transformed and the equilibrium constant K_{const} replaced with K_p. From Clapeyron's equation

$$p_i V = M_i \mu RT,$$

where M_i is the number of moles of the substance, we obtain:

$$c_i = \frac{M_i}{V} = \frac{p_i}{\mu RT}. \tag{15.93}$$

It follows that expression (15.92) can be presented in the form

$$\sum_{i=1}^{m} \nu_i \ln c_i = \ln \frac{c_{A_1}^{\nu_1} c_{A_2}^{\nu_2} \ldots}{c_{A_1'}^{\nu_1'} c_{A_2'}^{\nu_2'} \ldots} = \ln \left[\frac{P_{A_1}^{\nu_1} P_{A_2}^{\nu_2} \ldots}{P_{A_1'}^{\nu_1'} P_{A_2'}^{\nu_2'} \ldots} (\mu RT)^{\nu_1' + \nu_2' + \ldots - \nu_1' - \nu_2' \ldots}\right] =$$

$$= \ln \frac{P_{A_1}^{\nu_1} P_{A_2}^{\nu_2} \ldots}{P_{A_1'}^{\nu_1'} P_{A_2'}^{\nu_2'} \ldots} + \ln (\mu RT)^{\Delta\nu}, \tag{15.94}$$

where

$$\Delta\nu = \nu_1' + \nu_2' + \ldots - \nu_1 - \nu_2 - \ldots .$$

But since according to equation (15.43)

$$K_{\text{const}} = K_p (\mu RT)^{\Delta\nu},$$

we find that

$$L_{V,T} = \mu RT \left[\sum_{i=1}^{m} \nu_i \ln c_i - \ln K_{\text{const}}\right] =$$

$$= \mu RT \left[\ln \frac{P_{A_1}^{\nu_1} P_{A_2}^{\nu_2} \ldots}{P_{A_1'}^{\nu_1'} P_{A_2'}^{\nu_2'} \ldots} + \ln (\mu RT)^{\Delta\nu} - \ln K_{\text{const}}\right]. \tag{15.95}$$

Allowing for the fact, that, as follows from Eq. (15.43),

$$\ln K_p = \ln K_{\text{const}} - \ln (\mu RT)^{\Delta\nu},$$

from Eq. (15.95) we obtain:

$$L_{V,T} = \mu RT \left[\sum_{i=1}^{m} \nu_i \ln P_i - \ln K_p\right]. \tag{15.96}$$

Equations (15.91) and (15.96) are extremely important, since they relate the maximum work done in an isochoric-isothermal process, $L_{V,T}$, with the equilibrium constants, K_{const} and K_p. For actual calculations, however, the relationships describing the isobaric-isothermal process are the most important. These relationships can be easily derived.

In order to visualize a reversible isobaric-isothermal reaction, it would be necessary to equip vessels A, B and D (Fig. 15.6) with pistons so that they would become constant-pressure and not constant-volume vessels. In this case it would be necessary to add to the equations derived for L_{I}, L_{II} and L_{III} terms accounting for the work done due to the change in the volume of vessels A, B and D. In other words, for an isobaric-isothermal process,

$$L_{\mathrm{I}} = \mu RT \ln \frac{c_{\mathrm{H_2}}^2}{[\mathrm{H_2}]^2} + P_{\mathrm{H_2}} \Delta V_A, \tag{15.97}$$

$$L_{\mathrm{II}} = \mu RT \ln \frac{c_{\mathrm{O_2}}}{[\mathrm{O_2}]} + P_{\mathrm{O_2}} \Delta V_B, \tag{15.98}$$

$$L_{\mathrm{III}} = \mu RT \ln \frac{c_{\mathrm{H_2O}}^2}{[\mathrm{H_2O}]^2} + P_{\mathrm{H_2O}} \Delta V_D, \tag{15.99}$$

where ΔV_A, ΔV_B and ΔV_D are the changes in the volume of vessels A, B and D.

But, as we know, the quantity $L_{p,T}$ is equal to the work of a reversible isobaric-isothermal process minus the amount of work done on the surroundings (against external pressure), i.e.

$$L_{p,T} = L_{\mathrm{I}} + L_{\mathrm{II}} + L_{\mathrm{III}} - \sum p\Delta V. \tag{15.100}$$

For this example

$$\sum p\Delta V = P_{\mathrm{H_2}} \Delta V_A + P_{\mathrm{O_2}} \Delta V_B + P_{\mathrm{H_2O}} \Delta V_D; \tag{15.101}$$

therefore, for the general case,

$$L_{p,T} = \mu RT \left[\sum_{i=1}^{m} (\nu_i \ln c_i) - \ln K_{\mathrm{const}} \right] \tag{15.102}$$

and

$$L_{p,T} = \mu RT \left[\sum_{i=1}^{m} (\nu_i \ln P_i) - \ln K_p \right]. \tag{15.103}$$

We can see that Eqs. (15.91), (15.102), (15.96) and (15.103) are the same. This does not mean, however, that the values of $L_{V,T}$ and $L_{p,T}$ are the same for one system. It should be borne in mind that in deriving the equation for $L_{V,T}$ we considered a constant-volume system, and this means that the pressure in vessels A, B and D may be variable. Hence, the values of non-equilibrium concentrations and partial pressures present in Eqs. (15.91) and (15.96) and in Eqs. (15.102) and (15.103) may also differ.

The maximum work done in a reaction is often determined when

$$\sum_{i=1}^{m} (\nu_i \ln c_i) = 0 \tag{15.104}$$

or when

$$\sum_{i=1}^{m} (\nu_i \ln P_i) = 0 \tag{15.105}$$

i.e. at $c_i = 1$ or at $P_i = 1$. Then the equations of maximum work which are the measure of chemical affinity acquire the following general form:

$$L = -\mu RT \ln K_{\mathrm{const}} \tag{15.106}$$

and

$$L = -\mu RT \ln K_p. \tag{15.107}$$

It should be borne in mind that the values of maximum work calculated with the aid of Eqs. (15.106) and (15.107) do not coincide, for usually $K_p \neq \neq K_{const}$. If the values of maximum work L are calculated as the differences of thermodynamic potentials for the cases described by Eqs. (15.106) and (15.107), then the difference in the results will be evident if we allow for the difference in the initial states of the system, determined in one case by the condition $\sum_{i=1}^{m} (\nu_i \ln c_i) = 0$ and in the other by the condition $\sum_{i=1}^{m} (\nu_i \ln P_i) = 0$*.

15.4 The Nernst heat theorem

Since, as was shown, the change in a thermodynamic potential of a system shifting toward chemical equilibrium, equal to the maximum work minus the work done on the surroundings, is directly related with the equilibrium constants, the values of either the thermodynamic potential or the equilibrium constants should be available for actual calculations.

It is rather difficult to determine the equilibrium constants experimentally with a sufficient degree of accuracy. Since, on the one hand, the values of the equilibrium constant must be determined for a wide range of temperatures, including high temperatures, and on the other hand, it is very difficult to measure concentrations and partial pressures at high temperatures, the method of reaction freezing is usually followed. We know that at low temperatures chemical reactions proceed at very low rates. Many reactions almost terminate at moderate temperatures. Therefore, if a chemically reacting mixture of gases in a state of equilibrium at a high temperature is rapidly cooled, the concentration of this mixture will remain virtually constant for a long time. This method is called *reaction freezing*.

However, since a direct and exact experimental determination of the equilibrium constants is difficult, determination of the thermodynamic potential is preferred. For actual calculations, we must know not the absolute value of the potential but the differences between its values. For example, for an isobaric-isothermal reaction,

$$\Phi_1 - \Phi_2 = L_{p,T} = I_1 - I_2 - T(S_1 - S_2), \tag{15.108}$$

or, allowing for Eq. (15.2),

$$\Phi_1 - \Phi_2 = -Q_p - T(S_1 - S_2), \tag{15.109}$$

where S_1 and S_2 are the total values of entropy at the temperature T for the initial substances and reaction products, respectively.

The first term in the right-hand side of Eq. (15.109), the heat of reaction, Q_p, is easily determined experimentally. The values of the heats of chemical reactions are known for a wide range of temperatures. The second term in the right-hand side of Eq. (15.109) should be examined in greater detail.

It is clear that S_1 and S_2 can be expressed as follows:

$$S_1 = f_1(p, T) + S_{1,0} \tag{15.110}$$

* Condition $p_i = 1$ holds for the case when $\frac{M_i}{V} \mu RT = 1$.

and

$$S_2 = f_2(p, T) + S_{2,0}, \tag{15.111}$$

where $S_{1,0}$ and $S_{2,0}$ refer to a temperature of 0 K.

Allowing for Eq. (4.44), for any process these relationships can be presented in the following form:

$$S_1 = \int_{T=0}^{T} \frac{c_1}{T} dT + S_{1,0} \tag{15.112}$$

and

$$S_2 = \int_{T=0}^{T} \frac{c_2}{T} dT + S_{2,0}. \tag{15.113}$$

In order to calculate the value of entropy from Eqs. (15.112) and (15.113), we must know how heat capacity depends on temperature when $T \to 0$. If at $T = 0$ K heat capacity were finite, it would be impossible to use Eqs. (15.112) and (15.113): at $T = 0$ K the integral would be infinitely large. The heat capacity at $T = 0$ K cannot be determined experimentally, since although heat capacities have been measured at temperatures very close to absolute zero, they have never been experimentally determined at $T = 0$ K. Further analysis shows that this is impossible in principle.

In addition, we must know the integration constants $S_{1,0}$ and $S_{2,0}$ for Eqs. (15.112) and (15.113). For a substance of constant chemical composition, the difference in entropies caused by a change in substance parameters, can be determined without the integration constant, since it is eliminated in calculation. But the integration constants for chemical processes differ, since they refer to substances whose compositions are chemically different.

The German chemist W. Nernst is credited for the theorem, later proved experimentally, which determines the absolute values of entropies of substances (with 0 K as a reference, or fixed, point). The essence of the Nernst heat theorem is that close to the temperature of absolute zero the entropies of all substances in a state of equilibrium become constant and equal to each other*.

We can easily see that the Nernst heat theorem removes the difficulties in solving equations (15.112) and (15.113). In fact, it follows from the Nernst heat theorem that the derivatives $(\partial s/\partial T)_v$ and $(\partial s/\partial T)_p$ must become zero with the temperature T tending to zero. But according to Eq. (4.44),

$$c_x = T\left(\frac{\partial s}{\partial T}\right)_x.$$

Hence, with $T \to 0$ the heat capacities must also become zero and

$$\lim_{T \to 0} \frac{c_x}{T} = 0.$$

This conclusion conforms both with the numerical data of heat capacities at temperatures close to the temperature of absolute zero and also with Debye's formula (6.10) stating that at sufficiently low temperatures (about 20 K and below) the heat capacities are proportional to absolute temperature in the third power (see Sec. 6.1).

* We are dealing with condensed systems.

It also follows from the Nernst heat theorem that the constants of Eqs. (15.112) and (15.113) are equal to each other at $T = 0$:

$$S_{1,0} = S_{2,0} = \ldots = \text{const}. \tag{15.114}$$

Planck subsequently showed that the values of $S_{1,0}$ and $S_{2,0}$ are not only equal to each other but are equal to zero. Planck proposed a more general formulation of the Nernst heat theorem:

The entropies of all bodies of finite volume and homogeneous composition become zero when the temperature tends to absolute zero.

To determine the absolute values of entropy we must make one more observation.

Fig. 15.7

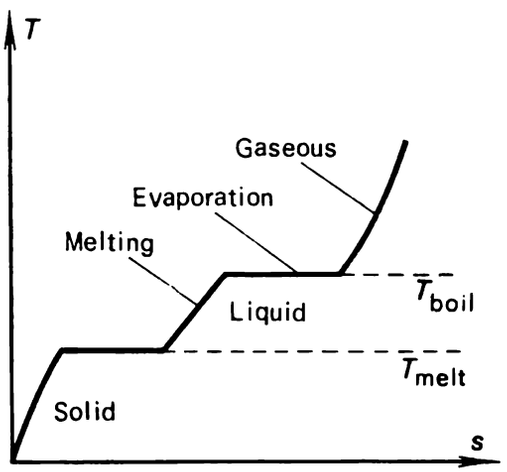

The integral $\int\limits_{T=0}^{T} \frac{c_x}{T}\, dT$ must be calculated for a concrete process with $x = \text{const}$, such as an isobaric process; in addition, the dependence of the heat capacity c_x on temperature for the given process, for example, $c_p = f(T)$, should be used. However, for an arbitrary process, such as isobaric heating, changes of phase will take place. Therefore, the equation for the absolute value of entropy takes the following form (Fig. 15.7):

$$S = \int\limits_{T=0}^{T_{melt}} \frac{c_{p\,s}}{T}\, dT + \frac{r_{melt}}{T_{melt}} + \int\limits_{T_{melt}}^{T_{boil}} \frac{c_{p\,l}}{T}\, dT + \frac{r_{boil}}{T_{boil}} + \int\limits_{T_{boil}}^{T} \frac{c_{p\,g}}{T}\, dT. \tag{15.115}$$

The notations used in (15.115) require no explanation.

As was already mentioned, the Nernst heat theorem permits us to calculate absolute values of entropy. Table 15.2 contains the values of absolute entropy for certain substances at standard conditions ($p = 760$ mm Hg, $t = 25$ °C); absolute entropy is usually denoted by $S^0_{298.15}$.

The values of K_p are often calculated by *Planck's formula*. It follows from Eq. (15.107) that

$$L_{p,T} = \Phi_1 - \Phi_2 = -\mu RT \ln K_p. \tag{15.116}$$

But

$$\Phi_1 - \Phi_2 = (I_1 - I_2) - T(S_1 - S_2). \tag{15.117}$$

Table 15.2 Absolute entropy for substances at standard conditions

Substance	$S^0_{298.15}$ (kJ/kmol-K)	$S^0_{298.15}$ (kcal/kmol-K)	Substance	$S^0_{298.15}$ (kJ/kmol-K)	$S^0_{298.15}$ (kcal/kmol-K)
$H_2(g)$	130.63	31.20	$NH_3(g)$	192.76	46.04
$H_2O(l)$	70.13	16.75	$Al_2O_3(s)$	51.00	12.18
$D_2(g)$	144.95	34.62	$K(s)$	64.73	15.46
$Cl_2(g)$	223.12	53.29	$SO_2(g)$	248.24	59.29
$N_2O_5(g)$	355.88	85.00			

Taking into account that

$$I_1 - I_2 = -Q_p$$

and

$$Q_p = Q_{p0} + I_2^* - I_1^*,$$

where I_1^* and I_2^* are absolute entropies assuming that $I_{1,0} = I_{2,0} = 0$, we can write:

$$\Phi_1 - \Phi_2 = -Q_{p0} + (I_1^* - I_2^*) - T(S_1 - S_2) = -\mu RT \ln K_p. \quad (15.118)$$

Passing to common logarithms and taking into account that $\mu R \cong \cong 8.31$ kJ/(kcal-K), we find from equation (15.118) that

$$\log K_p = \frac{1}{19.14}\left[\frac{Q_{p0}}{T} - \frac{I_1^* - I_2^*}{T} + (S_1 - S_2)\right]. \quad (15.119)$$

Allowing for equation (15.20)

$$\mathcal{P} = S - \frac{I}{T},$$

we can present (15.119) in the following form:

$$\log K_p = \frac{1}{19.14}\left[\frac{Q_{p0}}{T} + (\mathcal{P}_1 - \mathcal{P}_2)\right]. \quad (15.120)$$

This equation is of great practical value. It should be borne in mind that when determining the Planck function, entropies are taken with the temperature of absolute zero as a reference point, i.e. $I_{1,0}$ and $I_{2,0}$ are assumed equal to zero. The quantity $\mathcal{P}_1$ is the sum of the Planck functions of the initial substances, and the quantity $\mathcal{P}_2$ is the sum of the Planck functions of the products of reaction.

The importance of the Nernst heat theorem goes beyond the scope of this book. It follows from the thesis that near the temperature of absolute zero the entropy of a substance can't undergo changes in any process, that in this region substances are incapable of heat transfer. Nernst was thus able to formulate his theorem in the following way:

It is impossible to cool a substance to the temperature of absolute zero by rejecting heat; absolute zero temperature is unattainable.

Conclusion

At the end of our treatment of the main laws of engineering thermodynamics, we should like to again draw the reader's attention to the following. As was mentioned in the introduction, thermodynamics has a rather simple structure: having established the two main laws experimentally, we then applied mathematical analysis to derive the conclusions emphasized throughout the book. This simplicity and versatility distinguishes thermodynamics from other physical theories. We would like to end this book with Einstein's words, which he wrote in his *Autobiographical Notes*:

"A theory is the more impressive the greater the simplicity of its premises is, the more different kinds of things it relates, and the more extended is its area of applicability. Therefore the deep impression which classical thermodynamics made upon me. It is the only physical theory of universal content concerning which I am convinced that, within the framework of the applicability of its basic concepts, it will never be overthrown (for the special attention of those who are sceptics on principle)."

Bibliography

1. **Bošnjaković, F.**, *Technische Thermodynamik*, Vols. I-II, Steinkopff, Dresden, 1971-1972.
2. **Dodge, B.F.**, *Chemical Engineering Thermodynamics*, McGraw-Hill, New York, 1944.
3. **Gokhshtein, D.P.**, *Entropiinyi metod rascheta energeticheskikh poter'* (Entropy Calculation Method for Power Losses), Gosenergoizdat, Moscow-Leningrad, 1963.
4. **Gukhman, A.A.**, *Ob osnovakh termodinamiki* (On the Fundamentals of Thermodynamics), Akad. Nauk Kaz.SSR, Alma-Ata, 1947.
5. **Karapetyants, M.Kh.**, *Chemical Thermodynamics*, Mir Publishers, Moscow, 1977 (to be published).
6. **Keenan, J.H.**, *Thermodynamics*, MIT Press, Cambridge, Mass., 1970.
7. **Kirillin, V.A.**, and **Sheindlin, A.E.**, *Termodinamika rastvorov* (Thermodynamics of Solutions), Gosenergoizdat, Moscow-Leningrad, 1956.
8. **Kirillin, V.A., Sheindlin, A.E.**, and **Shpil'rain, E.E.**, *Zadachnik po tekhnicheskoi termodinamike* (Problems in Engineering Thermodynamics), Gosenergoizdat, Moscow-Leningrad, 1957.
9. **Kubo, R.**, *Thermodynamics*, North-Holland, Amsterdam, 1963.
10. **Landau, L.D.**, and **Lifshitz E.M.**, *Statistical Physics*, Pergamon Press, Oxford, 1969.
11. **Martynovskii, V.S.**, *Termodinamicheskie kharakteristiki tsyklov teplovykh i kholodil'nykh mashin* (Thermodynamic Characteristics of Thermopower and Refrigeration Cycles), Gosenergoizdat, Moscow-Leningrad, 1952.
12. **Martynovskii, V.S.**, *Teplovye nasosy* (Heat Pumps), Gosenergoizdat, Moscow-Leningrad, 1955.
13. **Melent'ev, L.A., Styrikovich, M.A.**, and **Shteingauz, E.O**, *Toplivno-energeticheskii balans SSSR* (Fuel-Energy Balance of the USSR), Gosenergoizdat, Moscow-Leningrad, 1962.
14. **Schmidt, E.**, *Einführung in die technische Thermodynamik und in die Grundlagen der chemischen Thermodynamik*, Springer-Verlag, Berlin, 1963.
15. **Sychev, V.V.**, *Complex Thermodynamic Systems*, Plenum Press, New York, 1973.
16. **Tribus, M.**, *Thermostatics and Thermodynamics*, Van Nostrand, Princeton, N.J., 1961.
17. **Vargaftik, N.B.**, *Spravochnik po teplofizicheskim svoistvam gazov i zhidkostei* (Handbook of Thermal-Physical Properties of Fluids), Nauka, Moscow, 1972.
18. **Vukalovich, M.P.**, *Tablitsy termodinamicheskikh svoistv vody i vodyanogo para* (Steam Tables), Gosenergoizdat, Moscow-Leningrad, 1963.
19. **Vulis, L.A.**, *Termodinamika gazovykh potokov* (Thermodynamics of Gas Flows), Gosenergoizdat, Moscow-Leningrad, 1950.
20. **Zemansky, M.W.**, *Heat and Thermodynamics*, McGraw-Hill, New York, 1968.

Name index

Andrews, Thomas 185
Aristotle 33
Avogadro, Count Amedeo 22

Bacon, Sir Francis 34
Beau de Rochas, Adolphe-Eugène 344
Bogolyubov, N. N. 200
Boltzmann, Ludwig 100, 105
Bošnjaković, Franjo 539
Boyle, Robert 18, 20

Cailletet, Louis P. 205
Carnot, Nicolas L. Sadi 64, 71, 344
Celsius, Anders 74
Clausius, Rudolf J. E. 63, 89, 386

Davy, Sir Humphry 34
Debye, Peter J. W. 167
Descartes, René 34
Dewar, Sir James 491
Diesel, Rudolf C. K. 346
Dodge, Barnet F. 539
Dulong, Pierre J. 167

Einstein, Albert 538

Gay-Lussac, Joseph L. 8, 20, 44
Gokhshtein, D. P. 539
Gouy, Georges 118
Grüneisen, Eduard 171
Gukhman, A. A. 539

Hess, Germain H. 510

Ioffe, A. F. 437, 442

Joule, James P. 34, 44

Kamerlingh Onnes, Heike 491
Kapitza, P. L. 492
Karapetyants, M. Kh. 539
Keenan, Joseph H. 539
Kelvin, Lord (William Thomson) 63, 78, 80, 486
Kirillin, V. A. 539
Kopp, Herman F. M. 169
Kubo, Ryogo 539

Landau, L. D. 539
Laplace, Marquis Pierre S. de 162, 294, 511
Laval, Carl G. P. de 307
Lavoisier, Antoine L. 511
Lenoir, Jean J. É. 344
Lifshitz, E. M. 539
Linde, Karl P. G. von 474
Lomonosov M. V.

Mach, Ernst 306
Mariotte, Edme 18, 20
Martynovskii, V. S. 539
Mathias, Emile-Ovide-Joseph 205, 212
Mayer, Joseph E. 200
Mayer, Julius R. von 49
Melent'ev, L. A. 539
Mollier, Richard 221, 290

Nernst, Walther H. 535
Neumann, Franz E. 169
Newton, Sir Isaac 294

Ostwald, Wilhelm 64
Otto, Nikolaus A. 341, 344

Peltier, Jean C. A. 437
Petit, Alexis T. 167
Pictet, Raoul P. 489
Planck, Max 63, 64, 536
Poynting, John H. 158

Rankine, William J. M. 386

Rayleigh, Lord (John W. Strutt) 437
Rumford, Count (Benjamin Thompson) 34

Saha, Meghnad N. 528
Saint-Venant, Adhémar-Jean-Claude Barré de 300
Schmidt, Ernst H. W. 539
Seebeck, Thomas J. 435
Sheindlin, A. E. 539
Shpil'rain, E. E. 539
Shteingauz, E. O. 539
Stodola, Aurel 118
Styrikovich, M. A. 539
Sychev, V. V. 539

Tammann, Gustav 175
Tribus, Maron 539
Trinkler, G. V. 349

Van't Hoff, Jacobus H. 529
Vargaftik, N. B. 539
Vukalovich, M. P. 204, 539
Vulis, L. A. 317, 539

Waals, Johannes D. Van der 188

Zemansky, Mark W. 539

Subject index

absolute electric efficiency of a turbogenerator 399
absolute humidity 497
absolute pressure 13
absolute temperature 12, 19
absolute thermodynamic temperature scale (Kelvin scale) 82-85
absolute value of enthalpy 173, 183
absolute value of entropy 536, 537
absolute value of internal energy 43, 183
absolute zero temperature 82
absorption 479
absorption refrigerating installations 463, 479, 481
actual indicator diagram 284
actual power cycles 330
actual Rankine cycle 395, 406
adiabat, Poisson's equation of 240, 247
adiabatic compressibility of substance 295
adiabatic compression 278
adiabatic curve (adiabat) 18
adiabatic flow 238, 289
  frictional 308, 311
adiabatic process 18, 138
  reversible 91, 238, 239
  reversible, equation of 239
adiabatic throttling 253, 258
  of wet vapour 261, 262
  and the cooling of gases 262
air, dry 493
  humid 493
air-cycle refrigerating installations 463
allotropic modifications
  of bismuth 174, 175
  of carbon 175, 176
  of ice 145, 174, 175
  of a solid 173
Andrew's experiment 184-186
apparent (average) molecular (molar) mass of a mixture 29
area ratio of a cycle 93, 322
associations, molecular 144, 192
availability due to heat 115, 327
availability coefficient, relative 332, 413
availability loss coefficient 332
availability of flow 335
availability of a system 110-112, 115, 327, 332
  loss of 118, 326, 404, 405, 413
availability of a thermopower plant, coefficient of 331
available work 292, 312
average (apparent) molecular (molar) mass of a mixture 29
Avogadro's law 22
Avogadro's number 22
axial compressors 275

back pressure turbine 433
barometric pressure 503
Bernoulli equation 289
binary cycle 428
  efficiency of 430
  working medium of 428, 431
  mercury-water 428
binary mixture 26
binary plant 428
binary solution 480
  boiling point of 480
binodal 226
bismuth, allotropic modifications of 174, 175
boiler, loss of flow availability in 415
  loss of system availability in 408
boiling 144
boiling boundary (curve) 147, 480

boiling point 145
of a binary solution 480
standard 151
Boltzmann's constant 23, 107, 168, 445, 449, 528
boundary curve (line) 186, 204, 210
lower 204, 210
upper 204, 210
Boyle's curve 202
Boyle's law 18
Boyle's point 202
Boyle's temperature 202
brake thermal efficiency
of a component of a plant 325
of a plant 321, 325, 326, 400, 405, 413
Brayton cycle 354
bubble chamber 225

Cailletet-Mathias law of the rectilinear diameter 205
calorie 35
15° 36
international 36
caloric equation of state 49
caloric properties of humid air 499
caloric properties of substance 48, 105, 150, 164, 176, 182, 194, 195
caloric (heating) value of fuel 402
carbon, allotropic modifications of 175, 176
carburetor 341
Carnot cycle 64, 65, 382
completely reversible 331
efficiency of 67, 68, 77, 81, 323
irreversible 65, 69
refrigeration reversible 461, 462
reverse 65, 66, 461, 462
reversible 65, 66, 69, 87, 91, 461, 462
with wet steam 383
Carnot theorem 71
change-of-phase line 204
characteristic function 134, 516
characteristic temperature 167, 168
chemical affinity 517
measure of 517, 533
chemical equilibrium 508, 515, 529
chemical potential 135, 138, 144, 155, 518, 519
physical meaning of 519
chemical reversibility of reactions 515
chemical rocket engines 376-379
Clapeyron-Clausius' equation (*see* Clausius-Clapeyron's equation)
Clapeyron's equation 20
Claude method of liquefaction of gases 491
Clausius-Clapeyron's equation 148, 149, 160, 163, 186, 224
Clausius integral 88, 97
clearance 277, 284
closed cycle of a magnetohydrodynamic (MHD) generator 456-458
closed system, exergy of 336
coefficient, critical 193, 203
energy loss 309
velocity 309
of availability of a thermopower plant 331
of isothermal compressibility of a liquid 176
of isothermal compressibility of a solid 164
of isothermal throttling 262
of linear expansion of a solid 166
of performance of a heat pump 486, 487
of performance of a refrigerating unit 460, 465, 470, 473, 479, 484
of performance of a refrigerating unit, actual 463
of performance of a reverse Carnot cycle 462
of volume expansion of gas 18
of volume expansion of liquid 74, 177
of volume expansion of a solid 165
combined nozzle 316
compensating process 61, 103
complete regeneration of heat 94, 362, 421
completely reversible Carnot cycle 331
components (constituents) 25
composition of an ideal gas mixture 28
composition of a mixture 25
compressibility of a liquid 176, 194
coefficient of 176

compressibility of a solid 164
coefficient of 164
compressibility of substance, adiabatic 295
compression, adiabatic 278
isothermal 279
polytropic 279
compression machines, dynamic 274
static 274
compression ratio 343, 345
in a Diesel engine 346
compression wave 293
compressorless jet engines 372-376
compressors 274
axial 275
multistage 283
positive-displacement 274
reciprocating (piston) 274-276
rotary 274
sliding 274, 275
vane 274, 275
work input per cycle of 279, 285
condensation boundary 147
condensation point 145
condenser 383
loss of flow availability in 416, 417
loss of system availability in 411
condenser-evaporator 429
condenser of a refrigerating installation 468, 470, 471
conditions of equilibrium for an isolated system 138, 140
constant-pressure gas-turbine plant 353-355, 357, 359-361, 364, 368,
cycle of 353-355, 357, 359-361, 364, 368, 369
operating on a closed cycle 368-370
with adiabatic compression 357, 364, 365
with adiabatic compression and regeneration of heat 364
with isothermal compression 355, 361
with isothermal compression and regeneration of heat 361
with regeneration of heat 359-361, 365
constant-volume gas-turbine plant 367
cycle of 367, 368
constants of Van der Waals' equation 191
continuity equation 305
continuity of flow, principle of 51
conservation and conversion of energy, law of 36
consumption of fuel, hourly 402
convergent nozzle 297
calculation of 297-303
critical pressure ratio in 301
flow through 297
maximum discharge in 300
pressure ratio in 299, 301
cooling of humid air 507
coordinate, generalized 39, 519
correlated data calculation method 203
corresponding states 202
crisis of flow 316
critical coefficient 193, 203
critical discharge pressure 300
critical inversion point 261
for Van der Waals' gas 261
critical isobar 211
critical isochor 188, 194, 212
curvature at the critical point 213
critical isotherm 185, 187, 211
critical point 148, 184, 186, 187, 205, 210, 211, 220
isobaric heat capacity at 211
isochoric heat capacity at 213
critical pressure 186, 187, 191
critical pressure ratio in a convergent nozzle 301
critical properties 186, 187
critical section of a nozzle 315, 317
critical specific volume 186, 191
critical state 186
critical temperature 186, 187, 191
crystalline modifications 145
curve of inversion of the Joule-Thomson effect 260
cycle, binary 428
binary mercury-water 428
Carnot 64, 65
efficiency of 57, 74
external irreversibility of 70, 330
forward 59
fully reversible 330
internal irreversibility of 70, 330
internally reversible 330

cycle (*cont.*)
regenerative 94, 421
reheat 419-421
reverse 59, 459, 460
reversible 70, 87
vapour power 382
work output of 56, 324
cycle filling coefficient (*see* area ratio of a cycle)
cycle of a constant-pressure gas-turbine plant 353-355, 357, 359-361, 364, 368, 369
efficiency of 354, 355, 364, 365
cycle of a constant-volume gas-turbine plant 367, 368
efficiency of 367
cycle of a gas-turbine plant
with adiabatic compression 357, 364, 365
with adiabatic compression and regeneration of heat 364
with isothermal compression 355, 361
with isothermal compression and regeneration of heat 361
with regeneration of heat 359-361, 364, 365
cycle of a heating and power plant 433
cycle of a liquid propellant rocket engine 377-379
cycle of a pulsejet engine 375, 376
cycle of a ramjet engine 373-375
cycle of a turbojet engine 371, 372
cycles of jet engines 371-376
cycles of reciprocating internal combustion engines 341
cycles of refrigerating units 59, 459
cycles of rocket engines 376-381
cycles of thermopower plants 319

Dalton's law 27, 157, 494
Debye's equation 167
Debye's function 167, 168
Debye's T^3 law 168
degree of dissociation 520, 522
degree(s) of freedom of a system 145, 209
degree of ionization 527
degree of irreversibility 61, 117
of a cycle 320
degree of preliminary expansion 347, 356
degree of regeneration 360
maximum 362, 365, 366
degree of saturation 497
degree of thermodynamic perfection 332, 413
degree of vapour saturation 227
degree of wetness of a two-phase mixture 209
density 14, 144
of humid air 498
units of 14
density anomaly point of water 181, 230
density fluctuations 226
Dewar vessel 488
dew point 495, 501
diagram, phase 147
of exergy flow 417, 418
of heat flow 404, 405
diagram, c_n-n 251
c_p-T 180, 197, 530
c_v-T 530
c_v-v 213
e-s 338
i-d for humid air 503, 507
i-d for humid air, oblique 504, 506
i-p 196
i-s 223, 253, 291, 304, 309, 336, 392, 396, 397, 420
i-T 196
p-s 218, 221
p-T 15, 25, 147, 148, 174, 175, 183, 184, 188, 210, 213, 215, 227, 230, 231, 234, 236, 243, 260, 261, 472
p-v 15, 20, 24, 38, 39, 56, 58, 65, 70, 79, 89, 98, 113, 115, 185, 190, 210, 221, 227, 230, 234, 236, 243, 247, 276, 279, 283, 284, 291, 341, 345, 346, 350, 354, 361, 368, 372, 373, 376, 377, 384, 390, 460, 464, 495
pv-p 201
T-C 480
T-s 91, 92, 93, 218, 219, 221, 230, 234, 236, 243, 282, 284, 309, 322, 333, 345, 348, 352, 355, 358, 360, 361, 363, 364, 365, 366, 370, 384, 385, 386, 388,

diagram, *T-s* (*cont.*)
393, 394, 396, 397, 406, 419, 420, 422, 423, 430, 432, 453, 456, 458, 460, 461, 464, 467, 469, 470, 475, 477, 536
T-v 209, 221, 227, 230, 231, 234, 236, 243
u-s 265
v-T 15, 25, 178, 188, 207
π-τ 227, 260
φ-*p* 156
diagrams of state (diagram of properties) 15, 17, 220
diatomic gases, dissociation of 524
Diesel cycle 346-349
efficiency of 347, 348
compression ratio in 346
differential Joule-Thomson coefficient 258, 261, 262
differential of a function of process 120
differential of a function of state 43, 119
diffuser 306, 374
supersonic 307, 375
direct-contact regenerative feedwater heaters 421, 422, 424
discharge nozzle 316, 317
disintegration, heat of 152
displacement, work of 52, 254, 292
dissociation 522, 524
degree of 520, 522
heat of 525
of diatomic gases 524
district-heating heat extraction 434
double steam reheating 421
dry air 493
dry ice 475, 476
drying process 506
dryness fraction 208, 231
of steam 418
dry saturated vapour 208, 209, 217
dual combustion Trinkler cycle 349
efficiency of 350
duct of a magnetohydrodynamic (MHD) generator 451
Dulong and Petit law 167
dynamic compression machines 274
dynamic pressure 290
dynamometric indicator 275
efficiency, exergy 339
of a binary cycle 430
of the Carnot cycle 67, 68, 323
efficiency of a component of a plant, brake thermal 325
efficiency of a cycle 320
internal 320
internal absolute 321, 323
internal relative 321, 324
and the coefficient of performance 461
of a constant-pressure gas-turbine plant 354, 355, 364, 365
of a constant-volume gas-turbine plant 367
efficiency of the Diesel cycle 347, 348
efficiency of the dual combustion cycle 350
efficiency of an electric generator 399
efficiency of an engine (apparatus), internal relative 324
efficiency of the Otto cycle 343, 344
efficiency of a plant, brake thermal 321, 325, 326, 400, 405, 413
efficiency of the Rankine cycle 391, 393
efficiency of a reheat cycle 420
efficiency of a steam main 400
efficiency of a steam turbine, internal relative 396
efficiency of a thermionic converter 448
efficiency of a thermoelectric generator 441-443
efficiency of a turbogenerator, absolute electric 399
ejector (jet compressor) 286
electric generator, efficiency of 399
electron emission 444, 445
emission current 445
endothermic reaction 509
energy loss 118
energy loss coefficient 309
energy of a body, internal 36, 40
energy of a system, internal 132, 516
energy utilization factor 332
engine(s)
chemical rocket 376-379
four-stroke internal combustion 342, 346, 352
gas-turbine 353

engine(s) (*cont.*)
internal combustion 340
jet 371
liquid propellant rocket 377-379
nuclear rocket 379
reaction 371
reciprocating internal combustion 340
rocket 371, 376
two-stroke internal combustion 352
enthalpy 46, 123, 125, 126
absolute value of 173, 183
molar 47
reference point of 47, 183
units of 47
in an isobaric process 235
in an isothermal process 124
in throttling 254, 255
of humid air 499
of an ideal gas 48
of a liquid 181, 182
of a real gas 196
of a solid 173
of a system 132, 516
entropy 87, 89, 90, 214
absolute value of 536, 537
calculation of 214
dependence on temperature in a polytropic process 252
physical meaning of 100
reference point of 89, 214
units of 89
in an irreversible cycle 90
in an irreversible process 94
in an isentropic process 246
in an isobaric process 235
in an isochoric process 232, 233
in an isothermal process 237
in a mixing process 269
in a polytropic process 251, 252
in a reversible cycle 90
in a reversible process 96, 99
in a reversible adiabatic process 246
in throttling 257
of an ideal gas 217
of an isolated system 98
entropy diagrams 218
entropy method 326, 338
equation(s)
of the first law of thermodynamics for flow 53
equation(s) (*cont.*)
of reversible adiabatic flow 311
of a reversible adiabatic process 239
of state 48
of state, caloric 49
of state, thermal 48
equation of state of an ideal gas 20, 21, 83
equation of state of a substance 14
equilibrium, chemical 508, 515, 529, 530
conditions for 131, 516
criterion of 131-133
mechanical 109
phase 136, 142, 157
state of 62, 100, 109, 130, 508
thermal 109
thermodynamic 130
equilibrium composition 508
equilibrium constant 520, 529, 532
experimental determination of 534
equilibrium of an isolated system, conditions for 138, 140
equilibrium of a plasma, thermodynamic 457
equilibrium (quasi-static) process 16, 17, 62
equilibrium state of a system 16, 62, 109
equivalence of heat and work 35
Ettingshausen effect 463
excess heat 227
exergy 335
of a closed system 336
of the flow of a working medium 335, 338
of a flux of heat 338
exergy efficiency 339
exergy method 332, 335, 336, 338
an example 412
exothermic reaction 509
expander 460
reciprocating 460
turbine 460
expander liquefiers 491
expansion, work of 37, 38, 292
expansion of a real gas into a vacuum, adiabatic 264, 265
expectation, mathematical (*see* mathematical probability)

exponent of an isentropic process (*see* isentropic exponent)
extensive properties of substance 12, 30, 41, 46, 89, 209
external irreversibility of a cycle 70, 330
extraction of steam, district-heating 434
  industrial 433
extraction turbine 433

feed pump, loss of flow availability in 417
  loss of system availability in 412
15° calorie 36
first law of thermodynamics 11, 36, 40, 56, 63, 67, 100, 509
  equation of 45
  mathematical statement of 40, 47
first law of thermodynamics for flow 52, 53
  equation of 53
first and second laws of thermodynamics, mathematical statement of 100, 119
fixed points of temperature scales 85
flow
  adiabatic 238, 289
  adiabatic with friction 308
  availability of 335
  crisis of 316
  equation of the first law of thermodynamics for 53
  exergy of 335
  first law of thermodynamics for 52, 53
  ideal 289
  kinetic energy of 50
  loss of the availability of 335
  maximum useful work of 335
  reversible adiabatic 289, 290, 292, 310
  work performed by 51, 52, 292, 334
  of gas through a hole 304
  of gas through a tube 304
  of an ideal gas through a nozzle 303
  of a real gas through a nozzle 303
flow through a convergent nozzle 297
  reversible adiabatic 297
fluctuations 108
  of density 226
fluid, ideal 289
flux of heat, exergy of 338
force, generalized 39, 519
forechamber 349
forward cycle 59
forward process 59
four-stroke internal combustion engine 342, 346, 352
freon 473
friction, heat of 310
frictional adiabatic flow 311
fuel, caloric (heating) value of 402
  hourly consumption of 402
fuel consumption, specific 402
function of state 43, 47, 88, 89, 119, 133, 295, 336
  differential of 43, 119
function of process 38, 41, 43, 88, 119
  differential of 120

gas
  coefficient of volume expansion 18
  flow through a hole 304
  flow through a tube 304
  ideal 124
  isothermal compressibility of 194
  liquefaction of 184, 185
  specific volume of 194
  Van der Waals' 189-194
  velocity of sound in 296
gas constant 20, 23
  of a mixture 29
gas-cycle refrigerating installations 463
gas turbine 353
gas-turbine engine 353
gas-turbine plant
  constant pressure 353-355, 357, 359-361, 364, 368, 369
  constant volume 367
  with adiabatic compression 357, 364, 365
  with adiabatic compression, cycle of 357, 364, 365
  with adiabatic compression and regeneration of heat 364
  with adiabatic compression and regeneration of heat, cycle of 364, 365

gas-turbine plant (*cont.*)
with isothermal compression 355, 361
with isothermal compression, cycle of 355, 361
with isothermal compression and regeneration of heat 361
with isothermal compression and regeneration of heat, cycle of 361
with regeneration of heat 359-361, 364
with regeneration of heat, cycle of 359-361, 364, 365
operating on a closed cycle 368, 369, 370
Gay-Lussac—Joule's experiment 44, 60
Gay-Lussac's law 18
generalized coordinate 39, 519
generalized force 39, 519
geometrical nozzle 314
Gibbs free energy (*see* isobaric-isothermal potential)
Gibbs-Helmholtz equation 518
Gibbs phase rule 145
Gouy-Stodola's equation 118
Grüneisen's law 170, 171

heat
complete regeneration of 94, 362, 421
maximum useful work of (*see* availability due to heat)
mechanical equivalent of 35, 36, 49
regeneration of 94, 359, 363, 421, 424
units of 35
heat added
in an isentropic process 245
in an isobaric process 48, 234
in an isochoric process 44, 232
in an isothermal process 236, 237
in a reversible adiabatic process 245
heat capacity 30, 121, 126
along the boundary curve 220
average 31
isobaric 39, 48, 127, 196
isochoric 32, 44, 127
heat capacity (*cont.*)
mass 32
molar 32
true 31
volume 32
at the critical point, isobaric 211
at the critical point, isochoric 213
in an isentropic process 246
in an isobaric process 235
in an isochoric process 233
in an isothermal process 238
in a polytropic process 249
in a reversible adiabatic process 246
of an ideal gas 49
of an ideal gas, polytropic 250
of a liquid, isobaric 179-181
of a liquid, isochoric 179-181
of a plasma 529
of a solid, isobaric 171, 172
of a solid, isochoric 167-169, 172
of a real gas, isobaric 197
of a real gas, isochoric 199
of Van der Waals' gas, isochoric 192
of water, isobaric 179-181
of water, isochoric 181
heat engine 56
heat in a polytropic process 248, 249
heat of disintegration 152
heat of dissociation 525
heat of friction 310
heat of fusion (*see* heat of melting)
heat of ionization 528
heat of the isobaric-isothermal reaction of dissociation 525
heat of melting 153
heat of phase transition 144, 149, 173
heat of reaction 509, 514, 515
experimental determination of 534
of an isobaric-isothermal reaction 509, 514
of an isochoric-isothermal reaction 509, 515
heat of sublimation 153
heat of vapourization 150-153, 186, 205, 219
heat pump 486
coefficient of performance of 486, 487
heat sources 58

heat utilization factor 434, 478, 479, 482
heating coefficient 486
heating and power plant 433
cycle of 433
heating (caloric) value of fuel 402
helium, liquefaction of 491-492
Helmholtz free energy (*see* isochoric-isothermal potential)
Hess's law 510
heterogeneous reaction 524
heterogeneous system 129
heterogeneous thermodynamic system 129
homogeneous reaction 520
homogeneous system 129
homogeneous thermodynamic system 129
hourly consumption of fuel 402
humid air 493
caloric properties of 499
cooling of 507
density of 498
enthalpy of 499
saturated 495
saturation line for 502
unsaturated 495
humidity, absolute 497
relative 497
hydrogen, liquefaction of 491, 492

ice, allotropic modifications of 145, 174, 175
ideal flow 289
ideal fluid 289
idealized indicator diagram 284
ideal (perfect) gas 21, 124
enthalpy of 48
entropy of 217
equation of state of 20, 21, 83
flow through a nozzle 303
heat capacity of 49
internal energy of 45
isobars of 24, 25
isochors of 24, 25
isotherms of 24, 201, 247
polytropic heat capacity of 250, 251
throttling of 260
velocity of sound in 295-297
ideal gas mixture, composition of 28
volume composition of 28
ideal-gas temperature scale 75, 83-85
ideal-gas thermometer method 85
incompressible medium, velocity of sound in 295
indicator, dynamometric 275
indicator diagram 275, 276
actual 284
idealized 284
induction a.c. magnetohydrodynamic (MHD) generator 452
industrial steam extraction 433
influence inversion law 317
initial parameters of steam 391
injector 287
integral Joule-Thomson coefficient 258
integral throttling effect (*see* integral Joule-Thomson coefficient)
intensive properties of substance 12, 31, 43
internal absolute efficiency of a cycle 321, 323
internal combustion engine 340
four-stroke 342, 346, 352
reciprocating 340
two-stroke 352
working medium of 340
internal efficiency of a cycle 320
internal energy
absolute value of 43, 183
reference point of 43, 47
in an isochoric process 232
of a body 36, 40
of an ideal gas 45
of a real gas 199, 200
of a system 132, 516
of Van der Waals' gas 192
internal irreversibility of a cycle 70, 330
internally reversible cycle 330
internal pressure 177
in a liquid 177
internal relative efficiency of a cycle 321, 324
internal relative efficiency of an engine (apparatus) 324
internal relative efficiency of a steam turbine 396
international calorie 36

inversion curve
for nitrogen 260
for Van der Waals' gas 261
in reduced coordinates 260
inversion point, critical 261
ionization, degree of 527
heat of 528
thermal 526
irreversibility, degree of 61, 117
irreversibility of a cycle, degree of 320
external 70, 330
internal 70, 330
irreversible Carnot cycle 65, 69
irreversible cycle, entropy in 90
irreversible process 59, 60, 61
entropy in 94
isentrop 242, 243, 247
isentropic 91
isentropic exponent 239, 246
for air 242
for ideal gas 242
for water 241
isentropic process (*see* reversible adiabatic process)
isobar 18, 211, 233, 234, 247
critical 211
subcritical 194, 218, 219
supercritical 194-198, 218, 219
isobaric heat capacity 32, 48, 127, 196
at the critical point 211
of a liquid 179-181
of a real gas 197
of a solid 171, 172
of water 179-181
isobaric-isothermal potential 133, 155, 516
isobaric-isothermal process 532, 533
isobaric-isothermal reaction of dissociation, heat of 525
isobar of an ideal gas 24, 25
isobar of a real gas 233, 234
isobaric process 18, 47, 233, 247
enthalpy in 235
entropy in 235
heat added in 48, 234
heat capacity in 235
work in 233
isochor 18, 210, 229, 230, 247
critical 188, 194, 212
isochor (*cont.*)
critical, curvature at the critical point 213
isochoric heat capacity 32, 44, 127
at the critical point 213
of a liquid 179-181
of a real gas 199
of a solid 167-169, 172
of Van der Waals' gas 192
isochoric-isothermal potential 132, 135, 516
isochoric-isothermal process 532
isochoric process 18, 229, 247
entropy in 232, 233
heat added in 44, 232
heat capacity in 233
internal energy in 232
work in 232
isochor of an ideal gas 24, 25
isochor of a real gas 229, 230
isolated system
conditions of equilibrium for 131, 138, 140, 516
entropy of 98
isotherm 18, 210, 219, 235
critical 185, 187, 211
subcritical 185-188, 190, 194
supercritical 185, 187, 188, 190, 194
isothermal compressibility of a gas 194
isothermal compressibility of liquid 194
coefficient of 176
isothermal compressibility of a solid, coefficient of 164
isothermal compression 279
isothermal potential 135
isothermal process 17, 91, 235
enthalpy in 124
entropy in 237
heat added in 236, 237
heat capacity in 238
work in 236
isothermal throttling 262-263
coefficient of 262
isothermal throttling effect 262
isotherm of an ideal gas 24, 201, 247
isotherm of non-saturated air 503
isotherm of a real gas 235, 236
isotherms of Van der Waals' gas 189

jet compressor (ejector) 286
jet engine(s) 371
  compressorless 372-376
  cycles of 371-376
joule 35
Joule expansion 264
Joule's experiment 34, 35
Joule's law 46
Joule-Thomson coefficient, differential 258, 261, 262
  integral 258
Joule-Thomson effect 258
  critical point of inversion 261
  curve of inversion 260
  point of inversion 260

kelvin 19
Kelvin scale (*see* absolute thermodynamic temperature scale)
Kelvin thermodynamic temperature scale 81
kinetic energy of flow 50
Kirchhoff's equation 509, 514, 525
Kopp and Neumann law 169

labile state 130
Laplace equation 162, 295
latent heat (*see* heat of vapourization)
Laval nozzle 307
  calculation of 307-308
law of conservation and conversion of energy 36
Le Chatelier principle 138
Le Chatelier-Braun principle 521, 523
Linde method of liquefaction of gases 490
linear expansion of a solid, coefficient of 166
line-conduction magnetohydrodynamic (MHD) generator 452
line of surroundings 337
lines of constant dryness fraction 209
liquefaction of air 489
liquefaction of gases 184, 185, 490
  methods of 489-491
liquefaction of helium and hydrogen 491, 492
liquid
  coefficient of isothermal compressibility of 176
  coefficient of volume expansion of 74, 177
  compressibility 176
  enthalpy of 181, 182
  internal pressure in 177
  isobaric heat capacity of 179-181
  isochoric heat capacity of 179-181
  isothermal compressibility of 194
  saturated 208, 209
  specific volume of 176
  supercooled 225
  superheated 190, 224, 225
liquid propellant rocket engine 377-379
  cycle of 377-379
local resistance 253
logarithmic thermodynamic temperature scale 80
loss of availability
  coefficient of 332
  in a furnace 331
  in a system 118, 326, 404, 405, 413
  of flow 335
loss of flow availability
  in a boiler 415
  in a condenser 416, 417
  in a feed pump 417
  in a steam main 416
  in a turbine-generator 416
loss of system availability
  in a boiler 408
  in a condenser 411
  in a feed pump 412
  in a steam main 409
  in a turbine-generator 411
lower boundary curve 204, 210

Mach number 306
macrostate, statistical weight of (*see* thermodynamic probability)
macrostate of a system 104
magnetohydrodynamic (MHD) generator 451
  cycle of 453, 456-458
  duct of 451
  induction a.c. 452
  line-conduction type of 452
  operation of 451

MHD generator (*cont.*)
specific power of 452
temperature of gas at the inlet of 452
temperature of gas at the outlet of 453
working medium of 451, 457
mass action, law of 520
mass composition of a mixture 25
mass moisture content 495
mathematical expectation (*see* mathematical probability)
mathematical probability 101
mathematical statement of the first law of thermodynamics 47
mathematical statement of the first and second law of thermodynamics 100, 119
mathematical statement of the second law of thermodynamics 99
maximum degree of regeneration 362, 365, 366
maximum discharge of a convergent nozzle 300
maximum regeneration 362, 365, 366
maximum useful work (*see also* availability of a system) 111, 327, 332
of flow 335
of heat (*see also* availability due to heat)
maximum work 111, 326
Maxwell's construction 190, 191
Maxwell's relations 122, 123
Mayer-Bogolyubov's equation 200
Mayer's relation 49
mean planimetric temperatures 323
mean temperature of addition and rejection of heat in a cycle 322
measure of chemical affinity 517, 533
mechanical equilibrium 109
mechanical equivalent of heat 35, 49
mechanical nozzle 315
mechanical stability, conditions for 138
mechanical work 52, 278
done by a pump 387
melting 145, 153
heat of 153
melting boundary 147, 148, 153, 220
melting point 145
mercury-water cycle, binary 428
metastable state 130, 156, 190, 225
method(s)
of correlated data 203
of efficiencies 323, 330, 395
of liquefaction of gases 489-491
of liquefaction of gases, Claude 491
of liquefaction of gases, Linde 490
of liquefaction of gases, Pictet cascade 489
of thermodynamic similarity 202
microstate of a system 104
mist region 504, 505
mixing 267
in a constant volume 268
in filling a vessel 272
in a flow 270
mixture 25
apparent (average) molecular (molar) mass of 29
binary 26
composition of 25
gas constant of 29
mass composition of 25-27
molar composition of 26, 27
moisture content
mass 495
molar 495
molar composition of a mixture 26, 27
molar mass of a mixture, apparent (average) 29
molar moisture content 495
molecular associations 144, 192
molecular mass of a mixture, apparent (average) 29
Mollier's diagram 221
multistage compressors 283
distribution of the pressure difference between the stages 283

Nernst heat theorem 534-537
non-equilibrium process 16, 17, 62
non-saturated air region 503, 504
nozzle 297, 371
convergent 297
combined 316
discharge 316, 317
geometrical 314
Laval 307
mechanical 315

nozzle (*cont.*)
supersonic 307
thermal 314
nuclear rocket engine 379
working medium of 380, 381

octane number 345
open cycle of a magnetohydrodynamic (MHD) generator 453
Otto cycle 341-346, 349
efficiency of 343, 344

parabola rule 212
partial pressure 27, 494
partition function 528
pascal 13, 14
path of the process 17
Peltier coefficient 437
Peltier effect 437, 463
perpetual motion machine of the first kind 57, 64
perpetual motion machine of the second kind 63, 64
perturbation, propagation of 293, 302
phase 129, 144
phase boundaries 129, 147
phase change (*see* phase transition)
phase diagram 147, 174, 175, 184
phase equilibrium 136, 142, 157
phase stability 155
phase transition 144, 150, 153, 157, 173, 204
heat of 144, 149, 173
Pictet cascade method of liquefaction of gases 489
piston (reciprocating) compressors 274-276
piston-type compressors in vapour-cycle refrigerating installations 474
Planck's constant 168, 528
Planck's function 517
Planck's formula 536
Planck-Gibbs' equation 212
plants, refrigerating 319
thermopower 319
plasma 12, 451
heat capacity of 529
thermodynamic equilibrium of 457
plasma state 526
point of inversion of the Joule-Thomson effect 260
critical 261
Poisson's equation of the adiabat 240
polytrope 246
polytropic compression 279
polytropic exponent 246
determination for a particular process 252
polytropic heat capacity of ideal gas 250
polytropic process 246
entropy in 251, 252
heat capacity in 249
heat in 248, 249
work in 247, 248
positive displacement compressors 274
potential
chemical 135, 138, 144, 155, 518
isobaric-isothermal 133, 155, 516
isochoric-isothermal 132, 135, 516
isothermal 135
thermodynamic 135, 517, 534
power cycles, actual 330
Poynting's equation 158, 159
pressure
absolute 13
barometric 503
critical 186, 187, 191
critical discharge 300
dynamic 290
internal 177
partial 27, 494
reduced 191, 192
static 290
thermal 177
total 177, 189, 290
units of 13, 14
pressure ratio in a convergent nozzle 299, 301
pressure ratio of the process of compression 356
prevacuation pump 488
principal triple point 146
principle of continuity of flow 51
probability, mathematical 101
probability, thermodynamic 105
process
adiabatic 18, 138
compensating 61, 103

process (*cont.*)
equilibrium (quasi-static) 16, 17
forward 59
function of 38, 41, 43, 119, 120
irreversible 59-61
isentropic 91, 238, 239
isobaric 18
isobaric-isothermal 532, 533
isochoric 18
isochoric-isothermal 532
isothermal 17, 91
non-equilibrium 16, 17, 62
path of 17
reverse 59
reversible 59, 62
reversible adiabatic 91
thermodynamic 16
propagation of a perturbation 293, 302
properties of substance
critical 186, 187
extensive 12, 30, 41, 46, 89, 209
intensive 12, 31, 43
psychrometer 501
pulsejet engine, cycle of 375-376
pump
loss of flow availability in 417
loss of system availability in 412
mechanical work of 387
prevacuation 488
pure substance 25

ramjet engine, cycle of 373-375
Rankine cycle 385, 386
actual 395, 406
efficiency of 391, 393
with regeneration 421, 422
with saturated mercury vapour 428
with superheated steam 388, 389
rarefaction wave 302
reaction
chemical reversibility of 515
endothermic 509
exothermic 509
heat of 509, 514, 515
heterogeneous 524
homogeneous 520
thermodynamic reversibility of 515
reaction engine 371
thrust of 371
reaction freezing 534
real gas
enthalpy of 196
expansion into a vacuum, adiabatic 264, 265
flow through a nozzle 303
internal energy of 46, 199, 200
isobaric heat capacity of 197
isobars of 233, 234
isochoric heat capacity of 199
isochors of 229, 230
isotherms of 235, 236
velocity of sound in 29
reciprocating (piston) compressors 274-276
reciprocating expander 460
reciprocating internal combustion engine 340
cycles of 341
recombination 527
reduced pressure 191, 192
reduced specific volume 191, 192
reduced temperature 191, 192
reference point of enthalpy 183
reference point of entropy 214
refrigerant(s) 460, 473, 474, 481, 489
of vapour-cycle refrigerating installations 471-474, 481
refrigerating capacity 462, 470
refrigerating factor 460
refrigerating plants 319
refrigerating units (installations) 463
absorption 463, 479, 481
air-cycle 463
cycles of 59, 459
gas-cycle 463
multiple stage compressor for 475
steam-ejector 463, 476
thermoelectric 482
vapour-cycle 463, 468, 469
working medium of 460, 463, 471-474, 481
refrigeration reversible Carnot cycle 461, 462
regeneration, maximum 362, 365, 366
regeneration fraction 360
regeneration cycle 94, 359, 363, 421
regenerative cycle 94, 421
regenerative cycle in three dimensions 423

regenerative feed-water heaters, direct-contact 421, 422 424
surface type 421
regenerative take-off 421
regenerator effectiveness 94
reheat cycle 419-421
efficiency of 420
reheating of steam 419, 420
double 421
reheat superheater 419
relative humidity 497
resistance, local 253
reverse Carnot cycle 65, 66, 461, 462
reverse cycle 59, 459, 460
reverse process 59
reversibility of reactions, chemical 515
thermodynamic 515
reversible adiabatic expansion, coefficient of 262
reversible adiabatic flow 289, 310
enthalpy drop in 290, 292
equations of 289, 311
reversible adiabatic process 91, 238, 239
entropy in 246
equation of 239
heat added in 245
heat capacity in 246
work in 244, 245
reversible Carnot cycle 65, 66, 69, 87, 91, 461, 462
refrigeration 461, 462
reversible cycle 70, 87
efficiency of 92
reversible process 59, 62
entropy in 90, 96, 99
Richardson's formula 445-447
rocket engine(s) 371, 376
cycles of 376-381
rotary compressors 274

Sabatier cycle 349
Saha's equation 528
Saint-Venant's hypothesis 300
saturated humid air 495
saturated liquid 208, 209
saturated vapour 187
saturation, degree of 497
saturation boundary 147, 148, 150, 180, 193, 195, 204, 261
saturation of vapour, degree of 227
saturation ratio 497
second law of thermodynamics 12, 63, 99, 143
Boltzmann's formulation of 105
Clausius' formulation of 63
Kelvin's formulation of 63
mathematical statement of 99
Planck's formulation of 63, 64
Seebeck effect 435, 436
sliding vane compressors 274, 275
solid(s)
allotropic modifications of 173
coefficient of isothermal compressibility 164
coefficient of linear expansion of 166
coefficient of volume expansion of 165
compressibility of 164
enthalpy of 173
isobaric heat capacity of 171, 172
isochoric heat capacity of 167-169, 172
specific volume of 164
solidification point 145
solidification boundary (line) 147
solution 25
binary 480
sound
thermodynamic velocity of 295
velocity of 292
space charge 447
specific fuel consumption 402
specific heat 31
specific power of a magnetohydrodynamic (MHD) generator 452
specific volume 14
critical 186, 191
reduced 191, 192
units of 14
of gas 194
of a liquid 176
of a solid 164
specific weight 14
spinodal 226
spontaneous ignition of the fuel mixture 345
stability, mechanical 138
thermal 138
stable state 130

stagnation temperature 318
standard boiling point 151
standard physical conditions 22
state
  critical 186
  diagrams (diagrams of properties) 15, 220
  function of 43, 47, 119, 133, 295, 336
  labile 130
  metastable 130, 156, 190
  stable 130
state of equilibrium 62, 100, 109, 130, 508
state of substance, metastable 225
state of a system
  macroscopic 104
  microscopic 104
  thermodynamic 104
states, corresponding 202
states of aggregation of substance 144, 147-149
static compression machines 274
static pressure 290
statistical weight of a macrostate (*see* thermodynamic probability)
steam
  dryness fraction of 418
  initial parameters of 391
  superheated 419
  superheating of 388, 419
steam-ejector refrigerating installations 463, 476
steam extraction, district heating 434
  industrial 433
steam-jet 476
steam main
  efficiency of 400
  loss of flow availability in 416
  loss of system availability in 409
steam reheating 419, 420
  double 338
steam superheater 388
steam turbine 383
Stefan-Boltzmann constant 499
subcritical isobar 194, 218, 219
subcritical isotherm 185-188, 190, 194
sublimation 144, 153, 154
  heat of 153
sublimation boundary 147, 148, 154, 220
sublimation point 145
substance
  adiabatic compressibility of 295
  caloric properties of 48, 105, 150, 164, 176, 182, 194, 195
  extensive properties of 12, 30, 41, 46, 89, 209
  intensive 12, 31, 43
  metastable state of 225
  states of aggregation of 144, 147-149
  thermal properties of 48, 125, 150, 164, 176, 194
substances, thermodynamically similar 202
supercritical isobar 194-198, 218, 219
supercritical isotherm 185, 187, 188, 190, 194
supercooled liquid 225
supercooled vapour 225
superheated liquid 224, 225
superheated steam 419
superheated vapour 187, 208, 224
superheating of steam 388, 419
supersonic diffuser 307, 375
supersonic nozzle 307
surface, thermodynamic 221
surface tension 160
surface-type regenerative feed-water heaters 421
surroundings, line of 337
system
  conditions for equilibrium of 138, 140
  heterogeneous 129
  homogeneous 129
  thermodynamic 16

tables, thermodynamic 511
takeoff, regenerative 421
temperature
  absolute 12, 19
  absolute zero 82
  characteristic 167, 168
  critical 186, 187, 191
  reduced 191, 192
  stagnation 318
  thermodynamic 78, 84, 154
  units of 13, 19

temperature, wet bulb 502
temperature scale
ideal-gas 75, 83-85
Kelvin thermodynamic 81
logarithmic thermodynamic 80
thermodynamic 154
temperature scales 13, 74, 85-87
fixed points of 85
thermal efficiency of the Carnot cycle 81
thermal efficiency of a cycle 57, 74
thermal efficiency of a reversible Carnot cycle 77
thermal efficiency of a cycle 92
thermal equation of state 48
thermal equilibrium 109
thermal equivalent of work 35
thermal ionization 526
thermal nozzle 314
thermal pressure 177
thermal properties of substance 48, 125, 150, 164, 176, 194
thermal stability, condition for 138
thermionic converter 444
on the fuel element of nuclear reactor 362
thermochemistry 508, 509
thermocouple 436
thermodynamic equilibrium 130
of plasma 456
thermodynamic potential 135, 517, 534
thermodynamic probability 105
thermodynamic process 16
thermodynamic properties of state 12
thermodynamic reversibility of reactions 515
thermodynamic similarity, method of 202
thermodynamic state of a system 104
thermodynamic surface 15, 181, 221
thermodynamic system 16
heterogeneous 129
homogeneous 129
thermodynamic tables 511
thermodynamic temperature 78, 84, 154
thermodynamic temperature scale 154
absolute 82-85
100-degree 82
thermodynamic temperature scale, Kelvin 81
logarithmic 80
thermodynamic velocity of ound 295
thermodynamic similar substances 202
thermoelectric circuit 436
thermoelectric e.m.f. 435
thermoelectric generator 437
efficiency of 441-443
and thermionic converter 448
thermoelectric power 436
thermoelectric refrigeration units (installations) 482
thermoelectrode materials 442-444
thermoelectrodes 436
thermometer method, ideal gas 85
thermometric substance 75
thermopower plants 319
cycles of 319
throttling 253
adiabatic 253, 258
and the cooling of gases 262
enthalpy in 254, 255
entropy in 257
isothermal 262, 263
of ideal gas 260
of wet vapour 261, 262
through a porous plug 256
throttling effect, isothermal 262
throttling valve 468
thrust of the reaction engine 371
total pressure 177, 189, 290
transport work 52
Trinkler cycle 349
triple point 146-148, 220
principal 146
in diagrams of state 220
of water 43, 85, 146
Trouton's rule 206
turbine
back pressure 433
extraction 433
steam 383
turbine expander 460
turbine-generator
absolute electric efficiency of 399
loss of flow availability in 416
loss of system availability in 411
turbine with a deteriorated vacuum 433

turbojet engine, cycle of 371, 372
two-phase mixture 204, 208, 210
  degree of wetness of 209
two-phase region 204, 209, 220
two-phase system 204, 208
two-stroke internal combustion engine 352

units
  of density 14
  of enthalpy 47
  of entropy 89
  of heat 35
  of pressure 13, 14
  of specific volume 14
  of temperature 13, 19
  of work 35
universal gas constant 23
unsaturated humid air 495
upper boundary curve 204, 210
useful work 111, 112

Van der Waals' equation 184, 188, 189
  constants of 191
Van der Waals' gas 189-194
  critical inversion point for 261
  internal energy of 192
  inversion curve for 261
  isochoric heat capacity 192
  isotherms of 189, 190
vane compressors 274, 275
  sliding 274, 275
Van't Hoff reaction box 529
vapour
  dry saturated 208, 209, 217
  saturated 187
  subcooled 225
  supercooled 225
  superheated 187, 208, 224
  wet 208
vapour content 496
vapour-cycle refrigerating installations 463, 468, 469, 481
  absorption 463, 479, 481
  refrigerants for 471-474, 481
  steam-jet (steam-ejector) 463, 476
vapourization 144, 150-153
  heat of 150-153, 186, 205, 219
vapour power cycle 382
velocity coefficient 309
velocity of sound 292
  local 302
  thermodynamic 295
  in gases 296
  in an ideal gas 295-297
  in an incompressible medium 295
  in a real gas 296, 297
virial coefficient 200, 201
virial expansion 201
viscosity 289
volume composition of an ideal gas mixture 28
volume expansion
  of gas, coefficient of 18
  of a liquid, coefficient of 74, 177
  of a solid, coefficient of 165

water
  isobaric heat capacity of 179-181
  isochoric heat capacity of 181
  triple point of 43, 85, 146
water-density anomaly point 181, 230
water vapour (steam), thermodynamic properties of 204
wet-bulb temperature 502
wet vapour 208
  adiabatic throttling of 261, 262
Wilson's cloud chamber 225
work
  available 292, 312
  maximum 111, 326
  maximum useful (*see also* availability of a system) 111, 327, 332
  mechanical 52, 278
  thermal equivalent of 35
  transport 52
  units of 35
  useful 111, 112
  in an isentropic process 244, 245
  in an isobaric process 233
  in an isochoric process 232
  in an isothermal process 236
  in a polytropic process 247, 248
  in a reversible adiabatic process 244, 245
  of displacement 52, 254, 292
  of expansion 37, 38, 292
work function 445
working medium 56
  exergy of the flow of 335, 338

working medium (*cont.*)
of a binary cycle 428, 431
of an internal combustion engine 340
of a magnetohydrodynamic (MHD) generator 451, 457
of a nuclear rocket engine 380, 381
of a plant operating on a closed cycle 370
working medium (*cont.*)
of refrigerating units 460, 463, 471-474, 481
of a steam power cycle 427, 428
of a vapour power cycle 382
work input per cycle 278
of compressors 279, 285
work output of a cycle 56, 324
work performed by flow 51, 52, 292, 334

TO THE READER

Mir Publishers would be grateful for your comments on the content, translation and design of this book. We would also be pleased to receive any other suggestions you may wish to make.

Our address is:
USSR, 129820, Moscow I-110, GSP, Pervy Rizhsky Pereulok, 2
MIR PUBLISHERS

Printed in the Union of Soviet Socialist Republics